User's Manual for

Brute

Modulating Boiler	Water Heater
Model BNTH1000	Model BNTV1000
1,000 MBTU/h	1,000 MBTU/h
Model BNTH1200	Model BNTV1200
1,200 MBTU/h	1,200 MBTU/h

FOR YOUR SAFETY: This product must be installed and serviced by a professional service technician, qualified in hot water boiler and heater installation and maintenance. Improper installation and/or operation could create carbon monoxide gas in flue gases which could cause serious injury, property damage, or death. Improper installation and/or operation will void the warranty.

⚠ WARNING: If this Users Information Manual not followed exactly, a fire or explosion may result causing property damage, personal injury or death.

Do not store or use gasoline or other flammable vapors and liquids in the vicinity of this or any other appliance.

WHAT TO DO IF YOU SMELL GAS

- Do not try to light any appliance.
- Do not touch any electrical switch; do not use any phone in your building.
- Immediately call your gas supplier from a neighbor's phone. Follow the gas supplier's instructions.
- If you cannot reach your gas supplier, call the fire department.

Installation and service must be performed by a qualified installer, service agency, or the gas supplier.

⚠ AVERTISSEMENT: Si cette information utilisateurs manuel n'a pas suivi exactement, un incendie ou une explosion peut entraîner des dommages matériels, des blessures ou la mort

Ne pas entreposer ni utiliser d'essence ni d'autres vapeurs ou liquides inflammables dans le voisinage de cet appareil ou de tout autre appareil.

QUE FAIRE SI VOUS SENTEZ UNE ODEUR DE GAZ:

- Ne pas tenter d'allumer d'appareils.
- Ne touchez à aucun interrupteur. Ne pas vous servir des téléphones dans le bâtiment où vous vous trouvez.
- Appelez immédiatement votre fournisseur de gaz depuis un voisin. Suivez les instructions du fournisseur.
- Si vous ne pouvez rejoindre le fournisseur de gaz, appelez le service des incendies.

L'installation et l'entretien doivent être assurés par un installateur ou un service d'entretien qualifié ou par le fournisseur de gaz.

H2360700B

BRADFORD WHITE®

CONTENTS

Familiarizing yourself with the Brute 1
FOR YOUR SAFETY,
PLEASE READ THIS BEFORE OPERATING 2
What to Do If You Smell Gas 2
POUR VOTRE SÉCURITÉ,
LISEZ AVANT DE METTRE EN MARCHE 3
Que Faire si Vous Sentez une Odeur de Gaz 3
Lighting the Unit 4
Turning Off the Gas to the Unit 4
Instructions de Mise en Marche 5
Fermeture de l'Alimentation en Gaz 5
Shutting Down the Brute 6
Restarting the Brute 6
In the Event of Power Failure 6
THE USER INTERFACE AND INDICATORS 7
About Lockouts, Holds, and Alerts 9
Care, Inspection, and Service 10

FAMILIARIZING YOURSELF WITH THE Brute

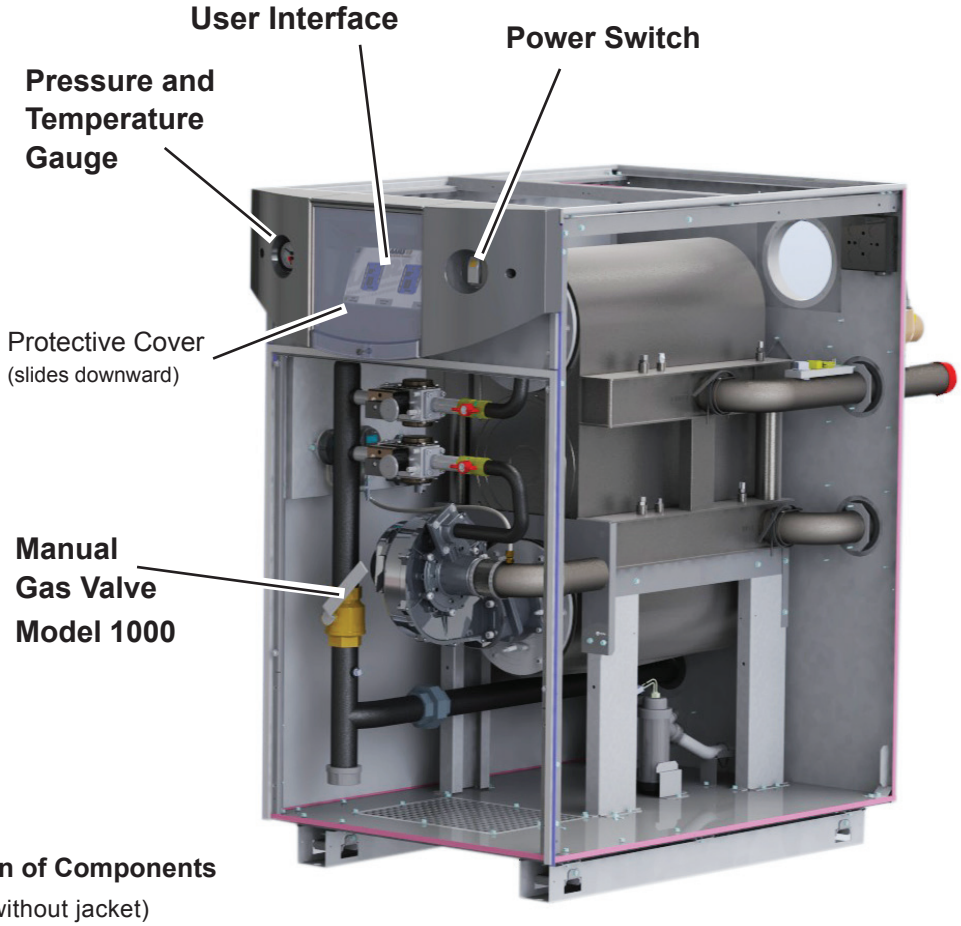

Location of Components
(shown without jacket)

FOR YOUR SAFETY -
PLEASE READ THIS BEFORE OPERATING

> ⚠ WARNING
>
> If you do not follow these instructions exactly, a fire or explosion may result, causing property damage, personal injury or loss of life.

A. This unit does not have a pilot. It is equipped with an ignition device which automatically lights the burner. Do not try to light the burner by hand.

B. **Before operating the unit**, check for any smell of gas in the area around it. Be sure to smell next to the floor, because some gas is heavier than air and will settle near the floor.

C. Use only your hand to turn the handle on the gas valve. Never use tools. If the valve handle will not turn by hand, don't try to repair it. Call a qualified service technician. If you force the valve or try to repair it, this may result in a fire or explosion.

D. Do not use this unit if any part has been under water. Immediately call a qualified service technician to inspect the unit. Any part of the control system or any gas control which has been under water must be replaced.

WHAT TO DO IF YOU SMELL GAS

- Do not try to light any appliance or device that uses gas.
- Do not touch any electrical switch. Do not use any phone in your building.
- Immediately call your gas supplier from a neighbor's phone. Follow the gas supplier's instructions.
- If you cannot reach your gas supplier, call the fire department.

POUR VOTRE SÉCURITÉ, LISEZ AVANT DE METTRE EN MARCHE

> ⚠ AVERTISSEMENT
> Quiconque ne respecte pas à la lettre les instructions dans la présente notice risque un début d' incendie ou une explosion entraînant des dommages, des blessures ou la mort.

A. Cet appareil est muni d'un dispositif d'allumage qui allume automatiquement la veilleuse. Ne tentez pas d'allumer la veilleu manuellement.

B. **Avant de faire fonctionner**, reniflez tout autour de l'appareil pour déceler une odeur de gaz. Reniflez près du plancher, car certains gaz sont plus lourds que l'air et peuvent s'accumuler au niveau du sol.

C. N'utilisez que votre main pour fermer la soupape d'arrêt de gaz. N'utilisez jamais d'outils. Si la poignêe de la valve ne tourne pas manuellement, ne tentez pas de la réparer. Communiquez avec un technicien de service qualifié. Le fait de forcer ou de tenter de réparer la poignée pourrait causer un incendie ou une explosion.

D. N'utilisez pas cet appareil s'il a été plongé dans I'eau, même partiellement. Faites inspecter I'appareil par un technicien qualifié et remplacez toute partie du système de contrôle et toute commande qui ont été plongées dans I'eau.

QUE FAIRE SI VOUS SENTEZ UNE ODEUR DE GAZ

- Ne pas tenter d'allumer d'appareil.
- Ne toucher à aucun interrupteur; ne pas vous servir des téléphones se trouvant dans le bâtiment.
- Appelez immédiatement votre fournisseur de gaz depuis un voisin. Suivez les instructions du fournisseur.
- Si vous ne pouvez rejoindre le fournisseur, appelez le service des incendies.

LIGHTING THE UNIT

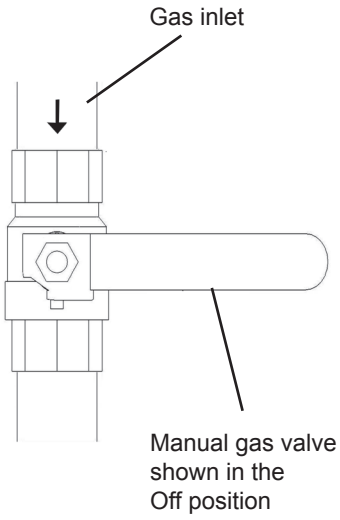

1. STOP! Read the safety information on the previous pages first!
2. Set the thermostat to the lowest setting.
3. Turn off all electric power to the unit.
4 This unit is equipped with an ignition device which automatically lights the burner. Do not try to light the burner by hand.
5. Remove the front access panel.
6 Turn OFF the manual gas valve. The valve is off when the valve handle is at a right angle to the gas pipe.
7. Wait five minutes to allow any gas to clear. Smell for gas, including the area near the floor. If you do smell gas, STOP! Follow Step B in the safety information listed above. If you don't smell gas, go to the next step.
8. Slowly turn the manual gas valve to "ON." The handle on the valve will be parallel to the gas pipe.
9. Replace the front panel.
10. Turn ON the electric power to the unit.
11. Set the thermostat to the desired setting.
12. If the unit will not operate, follow the instructions in "Turning Off the Gas to the Unit" and call your service technician or gas supplier.

TURNING OFF THE GAS TO THE UNIT

1. Before doing any service work, turn off all electric power to the unit.
2. Set the thermostat to the lowest setting.
3. Remove the front access panel.
4. Turn OFF the manual gas valve. The valve is off when the valve handle is at a right angle to the gas pipe.
5. Replace the front panel.

INSTRUCTIONS DE MISE EN MARCHE

1. ARRÊTEZ ! Lisez les informations de sécurité sur les pages précédentes première !
2. Coupez l'alimentation électrique de l'appareil.
3. Réglez le thermostat à la temperature la plus basse.
4. Cet appareil est dote d'un dispositif d'allumage qui allumera automatiquement le brûleur. Ne tentez pas d'allumer le brûleur manuellement.
5. Déposer le panneau d'accès avant.
6. Mettez la soupape d' arrêt de gaz à „OFF". La valve est en position „OFF" lorsque la poignée se trouve à angle droit du tuyau de gaz.
7 Attendez cinq minutes afin que le gaz se dissipe. Si vous croyez sentir une odeur de gaz, ARRÊTEZ ! Reportez-vous aux instructions B ci-dessus, sur cette étiquette. S'il n'y a pas d'odeur de gaz, passez à la prochaine étape.
8. Remettez lentement la soupape d'arrêt de gaz en position „ON". La poignée sera parallèle au tuyau de gaz.
9. Remplacer le panneau d'accès avant
10. Réglez le thermostat à la température désirée.
11. Rétablissez l'alimentation électrique à l'appareil.
12. Si l'appareil ne fonctionne pas, suivez les directives relatives à la fermeture de l'alimentation en gaz et communiquez avec votre technicien de service ou le fournisseur de gaz.

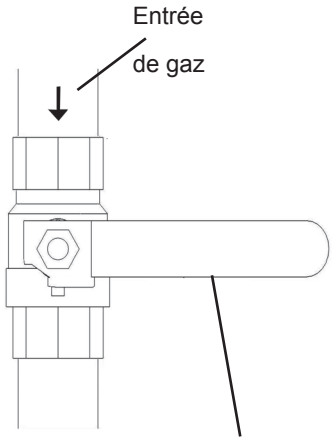

Valve de gaz manuel le se trouvant en position„OFF".

FERMETURE DE L'ALIMENTATION EN GAZ

1. Coupez toute alimentation électrique à l'appareil si celui-ci doit faire l'objet d'un entretien.
2. Réglez le thermostat au réglage le plus bas.
3. Déposer le panneau d'accès avant.
4. Mettez la soupape d'arrêt de gaz à „OFF". La valve est en position „OFF" lorsque la poignée se trouve à angle droit du tuyau de gaz.
5. Remplacer le panneau d'accès avant

SHUTTING DOWN THE BRUTE

It may sometimes be necessary to shut down the Brute. Here are the steps required to do this:

1. Switch off the main electrical disconnect switch.
2. Remove the front access panel and close the main manual gas valve.
3. If freezing is anticipated, drain the Brute. (Also be sure to protect the piping in the building from freezing.)

The steps listed above may require qualified service personnel.

RESTARTING THE BRUTE

It may be necessary to restart the Brute – for example, after a power interruption. Here are the steps required to do this:

1 Reset any errors using the user interface. See the section on "About Lockouts, Holds, and Alerts."

2 Turn up the thermostat to call for heat.

3. In approximately 2 seconds, the blower will operate. Ignition should occur after 35-40 seconds. It may take as long as 2-1/2 minutes.
4. If ignition does not occur, wait 5 minutes and then repeat steps 1 through 3.
5. If, after three attempts, the unit still does not light, shut down the boiler and call your service technician.

If the unit has been drained, follow these steps:

1. See the "Installation and Operation Manual" for instructions on filling and purging the unit.
2. Remove the front access panel and turn ON the main manual gas valve.
3. Switch on the main electrical disconnect switch. The pump and blower will start, and the igniter will be energized. After 35 seconds the gas valve will be energized, and ignition will occur. If ignition does not occur within 2-1/2 minutes switch "off" the main disconnect switch, wait 5 minutes and switch it "on" again. If after three attempts ignition does not occur, shut down the unit and call for service.

IN THE EVENT OF POWER FAILURE

The Brute will not operate during an electrical power outage. If there is an extended power outage with danger of freezing, then the Brute (and all other water systems) should be completely drained. Before draining the unit, turn off the gas and turn off the main power switch. When you replace the unit in service, refer to the "Installation and Operation Manual" for instructions on filling and purging.

CONTROLS AND INDICATORS

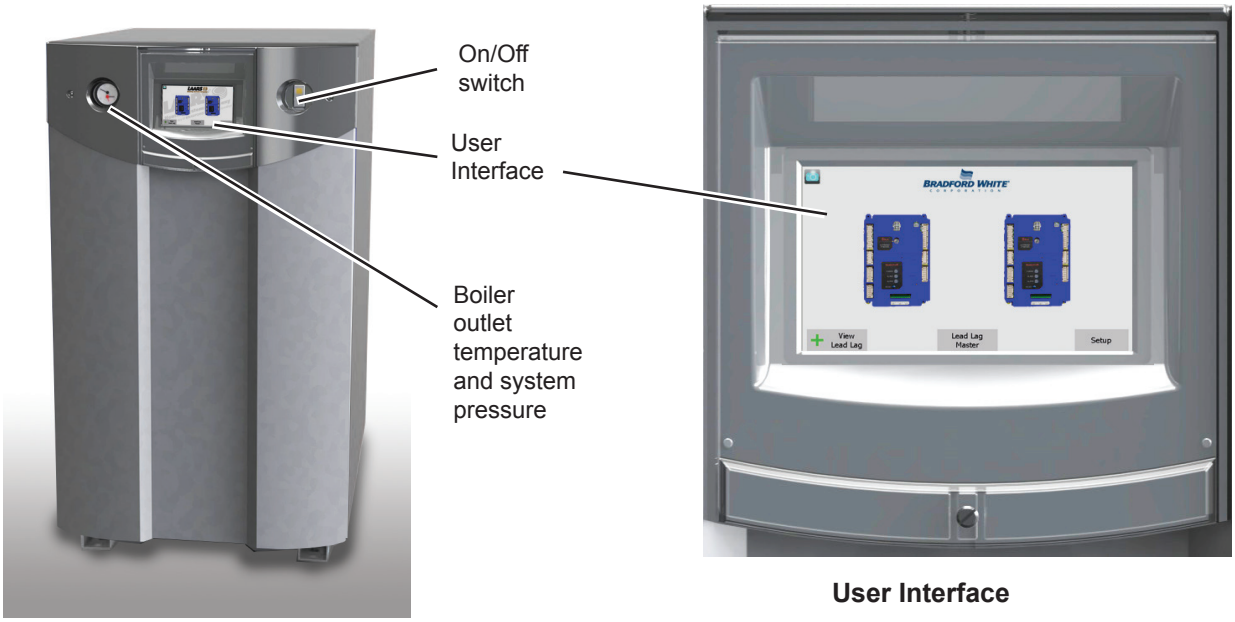

User Interface

Each Brute includes two burners, and each of these burners has a separate burner controller. A complete system can include up to four boilers, with up to eight burners and eight burner controllers. All managed through one (1) User Interface on the Lead boiler.

After the system starts, the User Interface Panel will automatically present the Home screen:

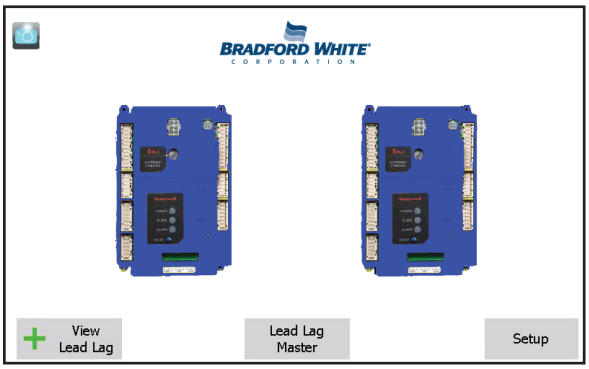

The icon for each burner controller will appear in one of four colors:

Blue	Normal operation
Red	Lockout
Gray	Standby mode (Burner switch off)
Gray and crossed out	Communication problem
Yellow	Hold state. This could be Anti short cycle, fan speed transitions, etc.

The operation of the whole system is supervised by the “Lead/Lag” control function. To monitor the operation of the Lead/Lag system, press the View Lead/Lag button on the Home screen.

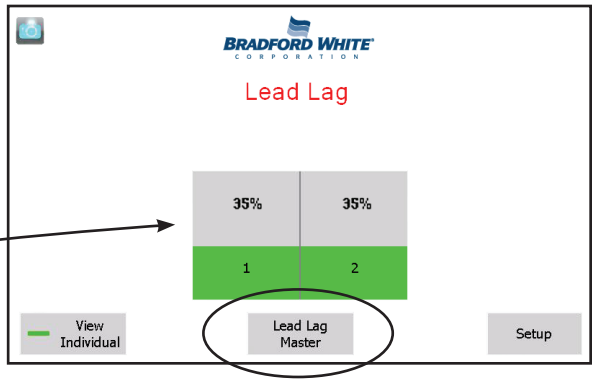

In the ‘Lead Lag Master’ example shown above, the complete system includes one boiler, with two burners.

To check the operation of an individual burner, press one of the large icons on the Home screen. The system will present a Status Summary screen for that burner:

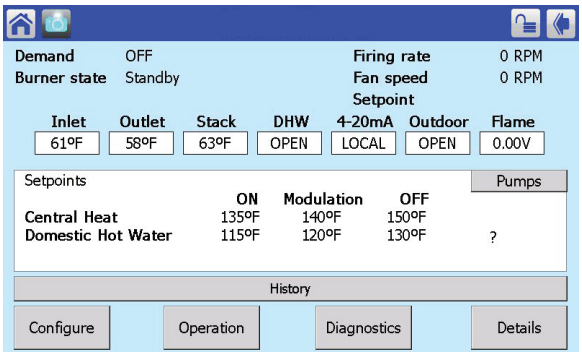

The Lead/ Lag Master button will also get you to some additional information about the system:

Tap to Stop Alarm

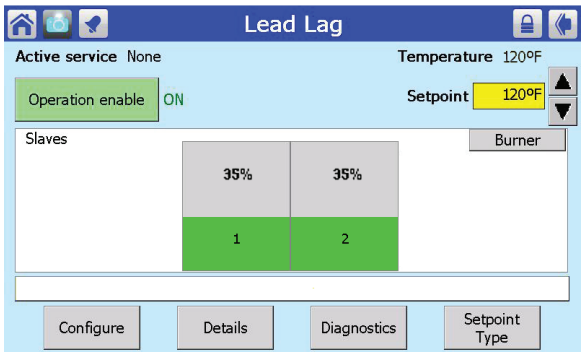

The yellow box in the upper right corner shows the setpoint, and the line above that shows the current temperature.

ABOUT LOCKOUTS, HOLDS, AND ALERTS

The system responds to three kinds of trouble indications:

- A"lockout" is caused by a serious problem that might involve a safety issue. Once the controller enters a lockout, the burners will shut down, and will not be allowed to run again until the cause of the problem is corrected, and you reset the control system.
- The system may enter a "hold" for a period of time before locking out. This allows the controller to see if the error becomes resolved prior to the hard lockout.
- An "alert" indicates that some feature of the control system's operation was not correct, delayed, or waiting for a response. This does not necessarily indicate a problem.

If a problem occurs while the system is starting up, the system will declare a Hold or Lockout:

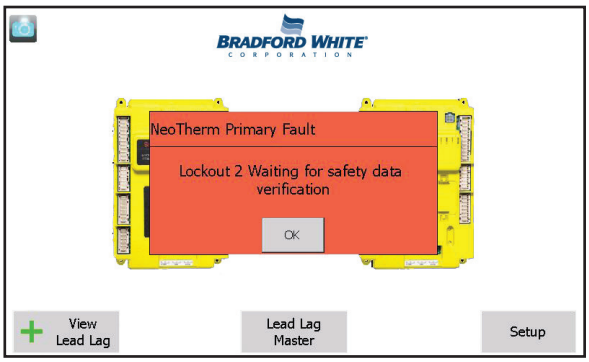

If a problem occurs while the system is running, a Bell symbol will appear in the upper left corner of the screen, and the system will present a note across the bottom of the screen. If you tap the bar which includes the message, the system will present more information about the problem. Press the OK button to indicate that you have seen the Lockout or Alert.

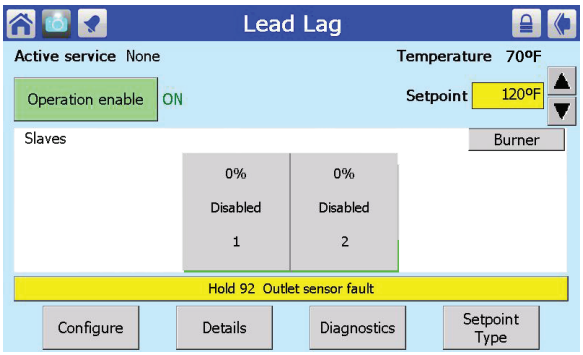

If an audible alarm on the display is active, tap the Bell symbol to stop it.

Each error message includes a number. For a more detailed description of each message, see the "Installation and Operation Manual."

GENERAL CARE

Keep the area around the Brute clear and free from combustible materials, gasoline and other flammable vapors and liquids. Clean the jacket surfaces with a damp cloth and mild soap. Do not use flammable cleaning materials. Keep the vent terminal free of obstructions. Do not pile snow against the vent terminal.

ANNUAL INSPECTION AND SERVICE

You should visually inspect the vent pipe once a year. Should any corrosion or leaks exist, have the affected parts replaced.

Once each year a qualified service agency should conduct a detailed inspection of all flue product carrying areas of the boiler and vent system. Follow the service instructions in the "Installation and Operating Instructions Manual" for the Brute.

⚠ Caution

Do not use this boiler if any part has been under water. Immediately call a qualified service technician to inspect the boiler. Any part of the control system and any gas control which has been under water must be replaced.

⚠ WARNING

If the unit overheats or the gas supply fails to shut off, do not turn off or disconnect the electrical supply to the pump. Instead, shut off the gas supply at a location external to the Brute.

En cas de surchauffe ou si l'admission de gaz ne peut être coupée, ne pas couper ni débrancher l'alimentation électrique de la pompe. Fermer plutôt le robinet d'admission de gaz à l'extérieur de l'appareil.

FOR SERVICE

Contact your installing contractor, gas utility, Bradford White dealer, or check www.Bradfordwhite.com for the nearest authorized representative in your area.

Dimensions and specifications subject to change without notice in accordance with our policy of continuous product improvement.

Low Lead Content NSF/ANSI 372

H2360700B

BRADFORD WHITE
200 Lafayette St.
Middleville, MI 49333
Warranty: (800) 531-2111
www.BradfordWhite.com
Litho in U.S.A. © Bradford White 1509 Document 1267B