BRADFORD WHITE®
WATER HEATERS

Commercial Ultra Low NOx Atmospheric Vent Gas Water Heater

Photo is of
U-65L-155E-3N

The Ultra Low NOx Models feature:

- **ICON HD™—**The proven design of an intelligent Honeywell® Integrated Control combines temperature control, diagnostic codes, and system functions and status into a single control with a digital LCD display.
  - **Operation Mode—**Simple, intuitive temperature adjustment up to 180°F/82°C. The user can easily select between Fahrenheit and Celsius.
  - **Service Mode—**The display has a "Service Mode" for changing the maximum setpoint and accessing information that may aid in the service of the water heater. These eight digitally displayed service screens can be easily cycled through by pressing the select button. The service screens include: max setpoint value, water temperature reading, flame current of pilot flame sensor, current temperature setpoint, F°/C° display change, temperature differential, software version, and error code history (up to ten previous error codes).
- **Premix Power Burner—**A self compensating negative pressure system automatically regulates fuel flow when a change in combustion air is detected. This provides for optimum combustion and efficiency. Automatically adjusts for altitudes up to 10,000 ft.
- **Direct Spark Ignition—**For improved operational dependability and durability.
- **Factory Installed Recirculation System—**Designed to reduce thermal stratification throughout the tank.
- **Integrated Exhaust System—**New configuration and vent connector height allow for easy replacement of existing atmospheric vent water heaters.
- **Sanitizing Capability—**Complies with sanitation capabilities up to 180°F (82°C).
- **Factory Installed Hydrojet® Sediment Reduction System—**Cold water inlet sediment reducing device helps prevent sediment build up in the tank.
- **Vitraglas® Lining—**Bradford White tanks are lined with an exclusively engineered enamel formula that provides superior tank protection from the highly corrosive effects of hot water. Vitraglas® is fused to the steel surface by firing at a temperature of over 1600ºF (871ºC).
- **Non-CFC Foam Insulation—**Covers the sides of tank, reducing the amount of heat loss. This results in less energy consumption, improved operation efficiencies and jacket rigidity.
- **Water Connections—**Factory installed true dielectric waterway fittings extend water heater life and eases installation.
- **Horizontally Configured Magnesium Anode Rods—**Can easily be serviced from the side of the water heater (65 gallon has 3 anodes; 100 gallon has 5 anodes).
- **14 Models Available—**65-100 gallon capacities, 155,000-399,999 BTU/Hr.
- **84% Thermal Efficiency**.
- **Zero Inch Clearance to Combustibles**.
- **Hand Hole Cleanout**.
- **NSF Construction Available**.
- **T&P Relief Valve—**Installed.
- **Low Restriction Brass Drain Valve—**Durable tamper proof design.
- **Ultra Low NOx Construction Standard (14 ng/J NOx emissions)**.
- **CSA Certified Low Lead Content**.

FEATURING:

ON GUARD RMT

THE BRADFORD WHITE ICON HD COMMERCIAL CONTROL SYSTEM

AHRI ASME HLW NSF

LLC - Low Lead Content

3 or 5-Year Limited Tank Warranties / 1-Year Limited Warranty on Component Parts.

For more information on warranty, please visit www.bradfordwhite.com

For products installed in USA, Canada and Puerto Rico. Some states do not allow limitations on warranties. See complete copy of the warranty included with the heater.

MANUFACTURED UNDER ONE OR MORE OF THE FOLLOWING U.S. PATENTS: 5,682,666; 7,634,976; 5,660,165; 5,954,492; 6,056,542; 6,935,280; 5,372,185; 5,485,879; 5,574,822; 7,971,560; 7,992,526; 6,684,821; 6,442,178; 7,334,419; 7,866,168; 7,270,087; 7,007,748; 5,596,952; 6,142,216; 7,699,026; 5,341,770; 7,337,517; 7,665,211; 7,665,210; 7,063,132; 7,063,133; 7,559,293; 7,900,589; 5,943,984; 8,082,888; 5,988,117; 7,621,238; 7,650,859; 5,761,379; 7,409,925; 5,277,171; 8,146,772; 7,458,341; 2,262,174. OTHER U.S. AND FOREIGN PATENT APPLICATIONS PENDING. CURRENT CANADIAN PATENTS: 2,314,845; 2,504,824; 2,108,186; 2,143,031; 2,409,271; 2,548,958; 2,112,515; 2,476,685; 2,239,007; 2,092,105; 2,107,012. **Vitraglas® and Hydrojet® are registered trademarks of Bradford White® Corporation.**

Commercial Gas Ultra Low NOx Water Heater

Ultra Low NOx Models

NATURAL GAS

Meet or exceed ASHRAE 90.1b (current standard) C.E.C. Listed
84% Thermal Efficiency

Model Number	Capacity U.S. Gal.	Capacity Imp. Gal.	Input Nat. BTU/Hr. Input	GPH Recovery at Degree Rise* 40°F	100°F	140°F	A Floor to Top of Vent in.	B Vent. Dia. in.	C Floor to Cold Water Inlet in.	D Floor to T&P Conn. in.	E Floor to Hot Water Outlet in.	F Floor to Top of Heater in.	G Floor to Gas Conn. in.	H Depth in.	J Width in.	Water Conn. Dia. in.	Gas Conn. Dia. in.	Relief Valve Open in.	Approx. Shipping Weight lbs.
U-65L-155E-3N	65	50	155,000	395	158	113	56	6	10 1/2	37	39 1/2	61	58	34 1/4	39 1/2	1 1/2	3/4	3/4	605
U-65L-199E-3N	65	50	199,999	509	204	145	56	6	10 1/2	37	39 1/2	61	58	34 1/4	39 1/2	1 1/2	3/4	3/4	605
U-65L-270E-3N	65	50	270,000	687	275	196	56	6	10 1/2	37	39 1/2	61	58	34 1/4	39 1/2	1 1/2	3/4	3/4	605
U-100L-199E-3N	100	83	199,999	509	204	145	56	6	10 1/2	53 1/4	55 3/4	77 1/4	74 1/2	34 1/4	39 1/2	1 1/2	3/4	3/4	700
U-100L-270E-3N	100	83	270,000	687	275	196	56	6	10 1/2	53 1/4	55 3/4	77 1/4	74 1/2	34 1/4	39 1/2	1 1/2	3/4	1	700
U-100L-300E-3N	100	83	300,000	764	305	218	61	7	10 1/2	53 1/4	55 3/4	77 1/4	74 1/2	37 1/4	42 1/2	1 1/2	3/4	1	700
U-100L-399E-3N	100	83	399,999	1018	407	291	62 3/4	8	10 1/2	53 1/4	55 3/4	77 1/4	74 1/2	38 1/4	43 1/2	1 1/2	1	1	700

Model Number	Capacity Liters	Input Nat. kW Input	LPH Recovery at Degree Rise* 22°C	56°C	78°C	A Floor to Top of Vent mm.	B Vent. Dia. mm.	C Floor to Cold Water Inlet mm.	D Floor to T&P Conn. mm.	E Floor to Hot Water Outlet mm.	F Floor to Top of Heater mm.	G Floor to Gas Conn. mm.	H Depth mm.	J Width mm.	Water Conn. Dia. mm.	Gas Conn. Dia. mm.	Relief Valve Open mm.	Approx. Shipping Weight kgs.
U-65L-155E-3N	246	45.4	1495	598	427	1423	152	267	940	1003	1549	1473	870	1003	38	19	19	274
U-65L-199E-3N	246	58.6	1927	772	549	1423	152	267	940	1003	1549	1473	870	1003	38	19	19	274
U-65L-270E-3N	246	79.1	2601	1041	742	1423	152	267	940	1003	1549	1473	870	1003	38	19	19	274
U-100L-199E-3N	379	58.6	1927	772	549	1423	152	267	1353	1416	1962	1892	870	1003	38	19	19	318
U-100L-270E-3N	379	79.1	2601	1041	742	1423	152	267	1353	1416	1962	1892	870	1003	38	19	25	318
U-100L-300E-3N	379	87.9	2892	1155	825	1550	178	267	1353	1416	1962	1892	946	1080	38	19	25	318
U-100L-399E-3N	379	117.2	3854	1541	1102	1594	203	267	1353	1416	1962	1892	972	1105	38	25	25	318

Available in Natural Gas only.

Complies with the latest Ultra-Low NOx requirements — 14 ng/joule or less.

Amp Draw range = 1.0 to 2.6 amps.

*Based on manufacturers rated recovery efficiency.

Gas Pressure: 14.0" w.c. maximum static, 4.5" w.c. minimum running (recommend 7.0" w.c. minimum running)

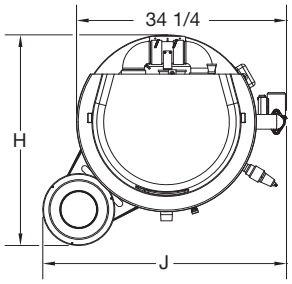

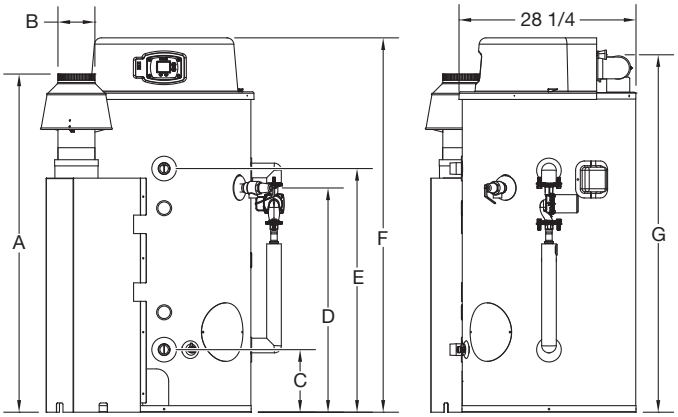

Note: Diagrams are for both 65 and 100 gallon models.

Sample Specification

The water heater shall be a Bradford White model U-_____ with a rated storage capacity of not less than _____ gallons/ liters, a minimum gas input of _____ BTU/Hr., a minimum recovery of _____ GPH/LPH at 100°F (56°C) temperature rise, a Thermal Efficiency Rating of 84%, and produce 14 ng/J or less of NOx emissions. It shall be design certified by CSA International (formerly AGA and CGA) for 180°F (82°C) application, either with or without a separate storage tank. The tank shall be lined with Vitraglas® vitreous enamel and shall have a bolted hand hole cleanout. This water heater shall be equipped with stainless steel cold water inlet, Hydrojet® Sediment Reduction System. The heater shall be insulated with Non-CFC foam. This water heater shall be equipped with an electronic ignition system, an ASME rated T&P relief valve and a premix combustion system. The water heater shall be factory assembled and tested. The water heater shall be approved for zero inch clearance to combustibles. A digital LCD display shall be integrated into the front and be an adjustable electronic thermostat to any temperature up to 180°F. A recycling Energy Cut Off (E.C.O.) shuts off all gas in the event of an overheat condition. The entire installation shall be made in compliance with state and local codes and ordinances.

General

All gas water heaters are certified at 300 PSI test pressure (2068 kPa) and 150 PSI working pressure (1034 kPa). All models are design certified by CSA International (formerly AGA/CGA), to ANSI standard Z-21.10.3, for up to 180°F (82°C) application as an Automatic Storage Heater. As an Automatic Storage Heater, all models are complete, self-contained water heating systems. It needs no separate storage tank, pump, wiring or elaborate piping network. When equipped with a mixing valve, it can supply 180°F (82°C) sanitizing and lower temperature general purpose hot water simultaneously. These models can be used either as a single unit or in multiples connected in series or parallel (recommended).

Dimensions and specifications subject to change without notice in accordance with our policy of continuous product improvement.

BRADFORD WHITE®
WATER HEATERS

Ambler, PA

For U.S. and Canada field service, contact your professional installer or local Bradford White sales representative.

Sales **800-523-2931** • Fax **215-641-1670** / Technical Support **800-334-3393** • Fax **269-795-1089** • Warranty **800-531-2111** • Fax **269-795-1089**

International: Telephone **215-641-9400** • Telefax **215-641-9750 / www.bradfordwhite.com**

BRADFORD WHITE-CANADA® INC. Sales / Technical Support **866-690-0961** / **905-238-0100** • Fax **905-238-0105** / **www.bradfordwhite.com**

Built to be the Best™

©2015, Bradford White Corporation. All rights reserved.