BRADFORD WHITE®
WATER HEATERS

GAS REPLACEMENT PARTS LIST

Interior Condensing Tankless Models

TGHE-160I-N(X)
TGHE-199I-N(X)

EVERHOT®
ADVANCED TANKLESS WATER HEATERS

Effective: October, 2010
ECO 7570

NOTE: BOTH MODEL AND SERIAL NUMBERS ARE REQUIRED FOR ORDERING REPLACEMENT PARTS

Dimensions and specifications subject to change without notice.

Parts Book #238-48815-00A

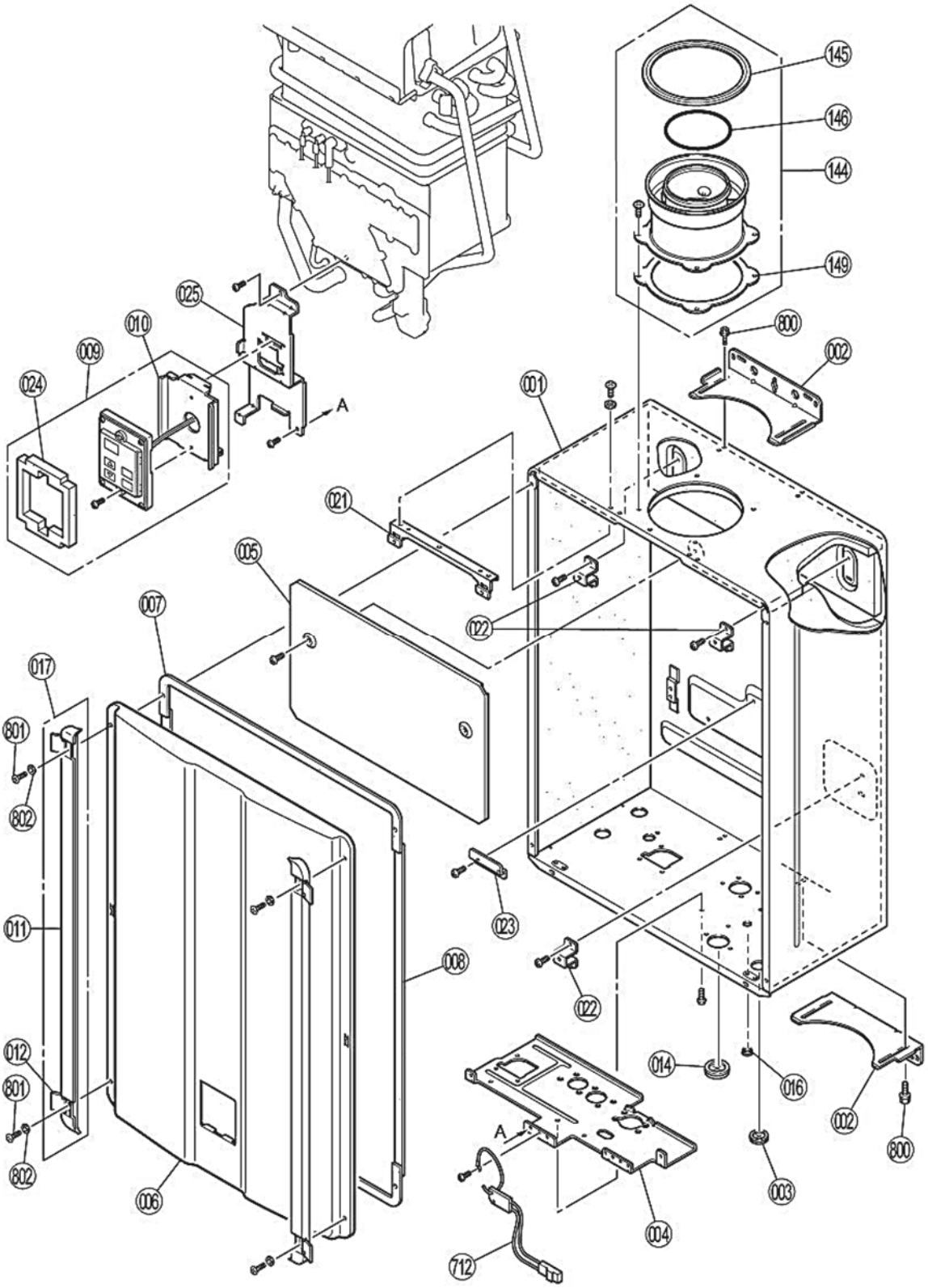

BRADFORD WHITE®
WATER HEATERS

No.	Description	TGHE-160I Part No.	TGHE-199I Part No.
001	Main Body	109000167	109000142
002	Wall Bracket	109000064	109000143
003	Rubber Bushing	109000015	109000015
004	Connection Reinforcement Panel	109000118	109000118
005	Heat Protection Plate	H73-065	H73-065
006	Front Panel	109000144	109000144
007	Gasket - Top and Bottom	109000120	109000120
008	Gasket - Side	109000121	109000121
009	Temperature Controller	239-48788-00*	239-48788-00*
010	Temperature Controller Bracket	109000156	109000156
011	Screw Cover	109000122	109000122
012	Screw Cover Lid	109000150	109000150
014	Rubber Bushing	U245-125	U245-125
016	Packing	109000016	109000016
017	Screw Cover Assembly	109000123	109000123
021	Reinforcement Bracket	109000124	109000124
022	Attachment Bracket	109000125	109000125
023	Reinforcement Bracket	---	U273-113
024	Temperature Controller Packing	109000157	109000157
025	Temperature Controller Bracket	109000145	109000145
144	Flue Connection Assembly	108000040	108000040
145	O-ring	108000017	108000017
146	O-ring	---	108000018
149	Gasket	109000159	109000159
712	Frost Sensing Switch	105000097	105000097
800	Screw	ZIHD0510UK	ZIHD0510UK
801	Screw	CP-30580-3	CP-30580-3
802	Washer	CF83-41430	CF83-41430

BRADFORD WHITE®
WATER HEATERS

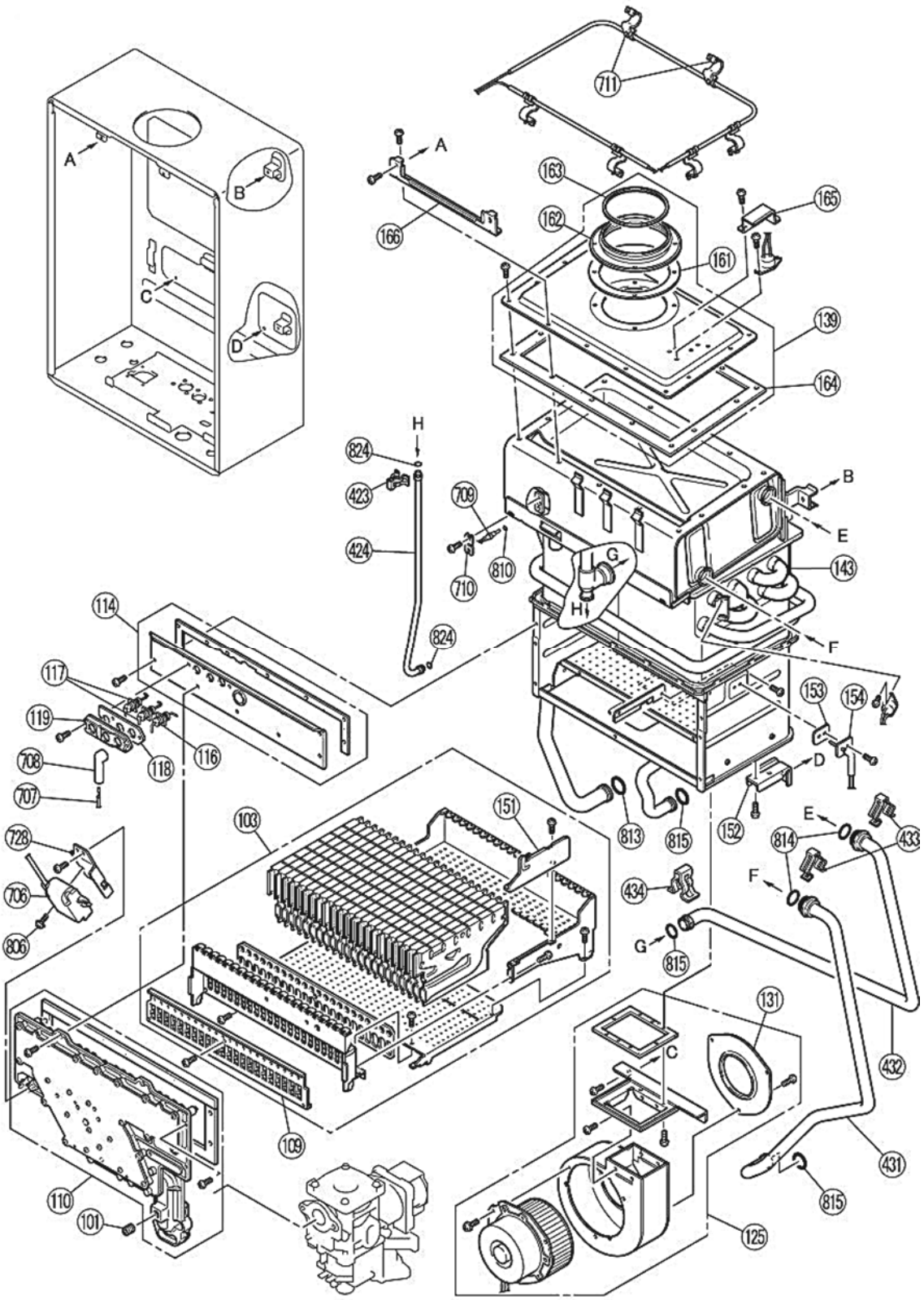

BRADFORD WHITE
WATER HEATERS

No.	Description	TGHE-160I Part No.	TGHE-199I Part No.
101	Test Port Set Screw	109000151	109000151
103	Burner Unit Assembly LPG	106000040	106000024
	Burner Unit Assembly NG	106000040	106000035
109	Damper LPG	106000043	106000025
	Damper NG	106000043	106000039
110	Manifold Assembly NG	106000044	106000036
114	Combustion Chamber Sight Glass Plate	109000168	106000038
116	Electrode	H73-120*	H73-120*
117	Flame Rod	105000093*	105000093*
118	Electrode Packing	109000126*	109000126*
119	Electrode Holder	109000127	109000127
125	Fan Motor All Assembly	108000041*	108000037*
131	ø36 Bell Mouth	109000169	---
139	Air Inlet Duct	108000039	108000039
143	Heat Exchanger Assembly	107000065	107000062
151	Burner Fixing	109000160	109000160
152	Reinforcement Bracket	---	109000128
153	Burner Sensor Gasket	109000149	109000149
154	Burner Thermistor	105000100	105000100
161	Outlet Pipe Packing	109000161	109000161
162	Outlet Pipe	107000064	107000064
163	ø80 O-ring	108000018	108000018
164	Packing	109000162	109000162
165	OHS Cover	109000163	109000163
166	Reinforcement Bracket	109000129	109000129
423	Clip	109000131	109000131
424	Connecting Pipe	107000067	107000059
431	Connecting Pipe - Inlet	107000060	107000060
432	Connecting Pipe - HEX	107000068	107000061
433	Clip	109000132	109000132
434	Clip	109000133	109000133
706	Ignitor	105000018	105000018
707	High Tension Cord	105000095	105000095
708	Electrode Sleeve	AU206-218	AU206-218

BRADFORD WHITE®
WATER HEATERS

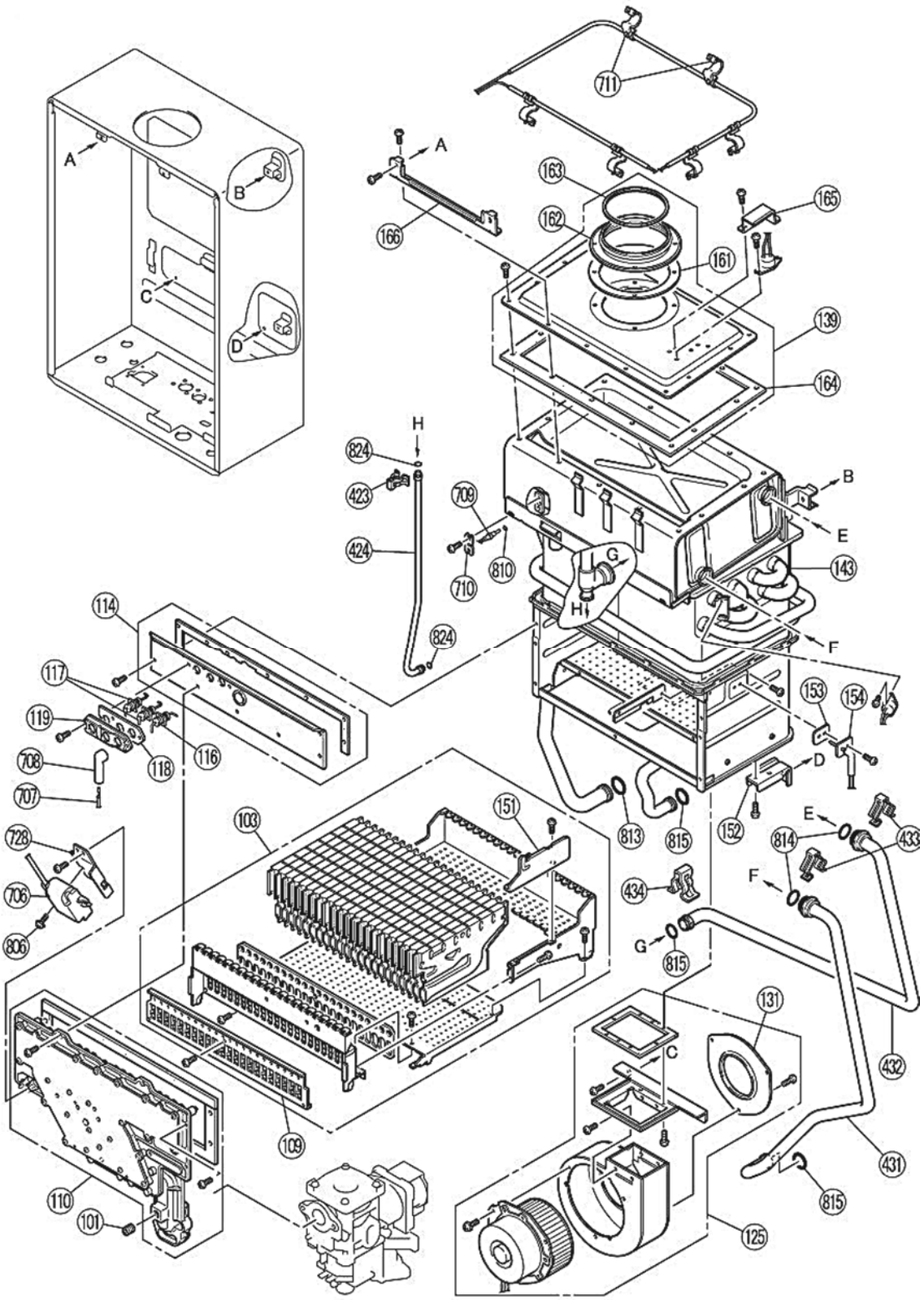

BRADFORD WHITE
WATER HEATERS

No.	Description	TGHE-160I Part No.	TGHE-199I Part No.
709	Thermistor	105000114	105000096
710	Thermistor Clip Large	CP-90172	CP-90172
711	Thermal Fuse Clip	109000141	109000141
728	Ignitor Attachment Plate	U273-225	109000165
806	Screw	CP-80452	CP-80452
810	O-ring	M10B-2-4*	M10B-2-4*
813	O-ring	---	M10B-2-18*
814	O-ring	M10B-2-16*	M10B-2-16*
815	O-ring	M10B-2-14*	M10B-2-14*
816	O-ring	M10B-2-7	M10B-2-7
824	O-ring	M10B-2-6	M10B-2-6

BRADFORD WHITE®
WATER HEATERS

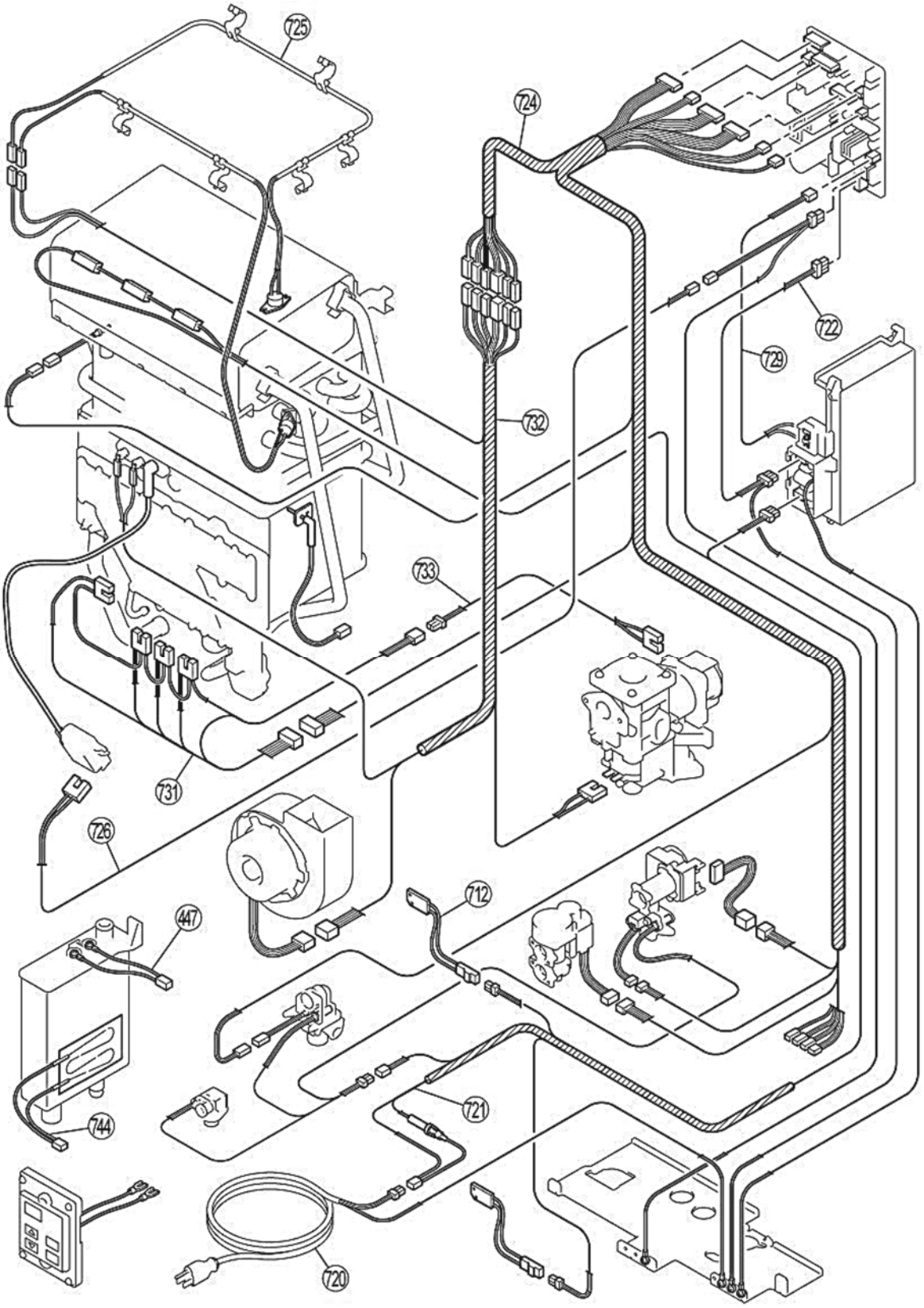

BRADFORD WHITE®
WATER HEATERS

No.	Description	TGHE-160I Part No.	TGHE-199I Part No.
447	Connection Harness	105000105	105000105
712	Frost Sensing Switch	105000097	105000097
720	Power Cord	105000030	105000030
721	Fuse Harness	105000101	105000101
722	Power Harness	105000107	105000107
724	Sensor Harness	105000116	105000103
725	Thermal Fuse Harness Assembly	105000117	105000104
726	Ignitor Harness	105000112	105000112
729	Temperature Controller Harness	105000042	105000042
731	Solenoid Connection Harness	105000118	105000109
732	AWG#18 Harness	105000119	105000110
733	Connection Harness	105000120	105000111
744	Heater and Harness	105000106	105000106

BRADFORD WHITE®
WATER HEATERS

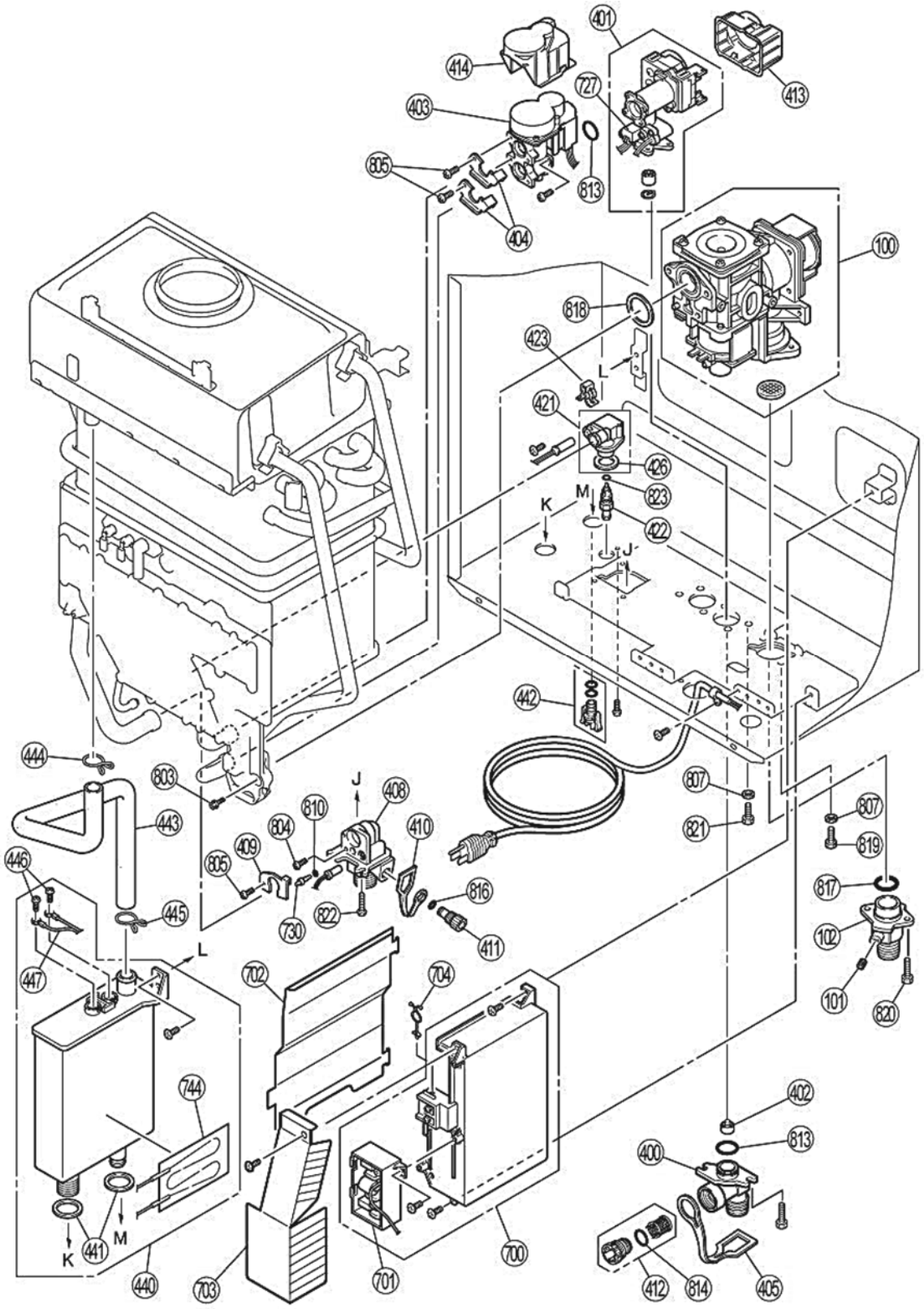

BRADFORD WHITE
WATER HEATERS

No.	Description	TGHE-160I Part No.	TGHE-199I Part No.
100	Gas Controller Assembly	106000010*	106000034*
101	Test Port Set Screw	109000151	109000151
102	Gas Connection 3/4" NPT	CU195-1866	CU195-1866
400	Water Inlet 3/4" NPT	H73-501-2	H73-501-2
401	Water Flow Servo and Sensor Assembly	107000055*	107000055*
402	Rectifier	M8D1-15X01	M8D1-15X01
403	By-pass Flow Assembly	M6J-1-4	M6J-1-4
404	Stop Bracket	AH69-310	AH69-310
405	Plug Band	109000018	109000018
408	Hot Water Outlet 3/4" NPT	107000066	107000056
409	Stop Bracket	U211-322X01	U211-322X01
410	Plug Band (Small)	109000019	109000019
411	Drain Valve	107000021	107000021
412	Water Filter Assembly	H98-510-S*	H98-510-S*
413	Cover	109000130	109000130
421	Drain Connection	107000057	107000057
422	Drain Plug	107000058	107000058
423	Clip	109000131	109000131
426	Packing	109000153	109000153
440	Condensate Trap	109000134	109000134
441	Packing	109000154	109000154
442	Condensate Trap Plug	109000135	109000135
443	Condensate Drain Tube	109000136	109000136
444	Band	109000137	109000137
445	Band	109000138	109000138
446	Screw	109000155	109000155
447	Connection Harness	105000105	105000105
700	PC Board	105000113	105000094
701	Surge Protector	105000014	105000014
701	Surge Protector with Terminals	BU195-1873-2X01	BU195-1873-2X01
702	PC Board Cover Side	109000164	109000164
703	PC Board Cover Front	109000139	109000139
704	Clip	109000140	109000140
727	Flow Sensor	105000041	105000041

BRADFORD WHITE®
WATER HEATERS

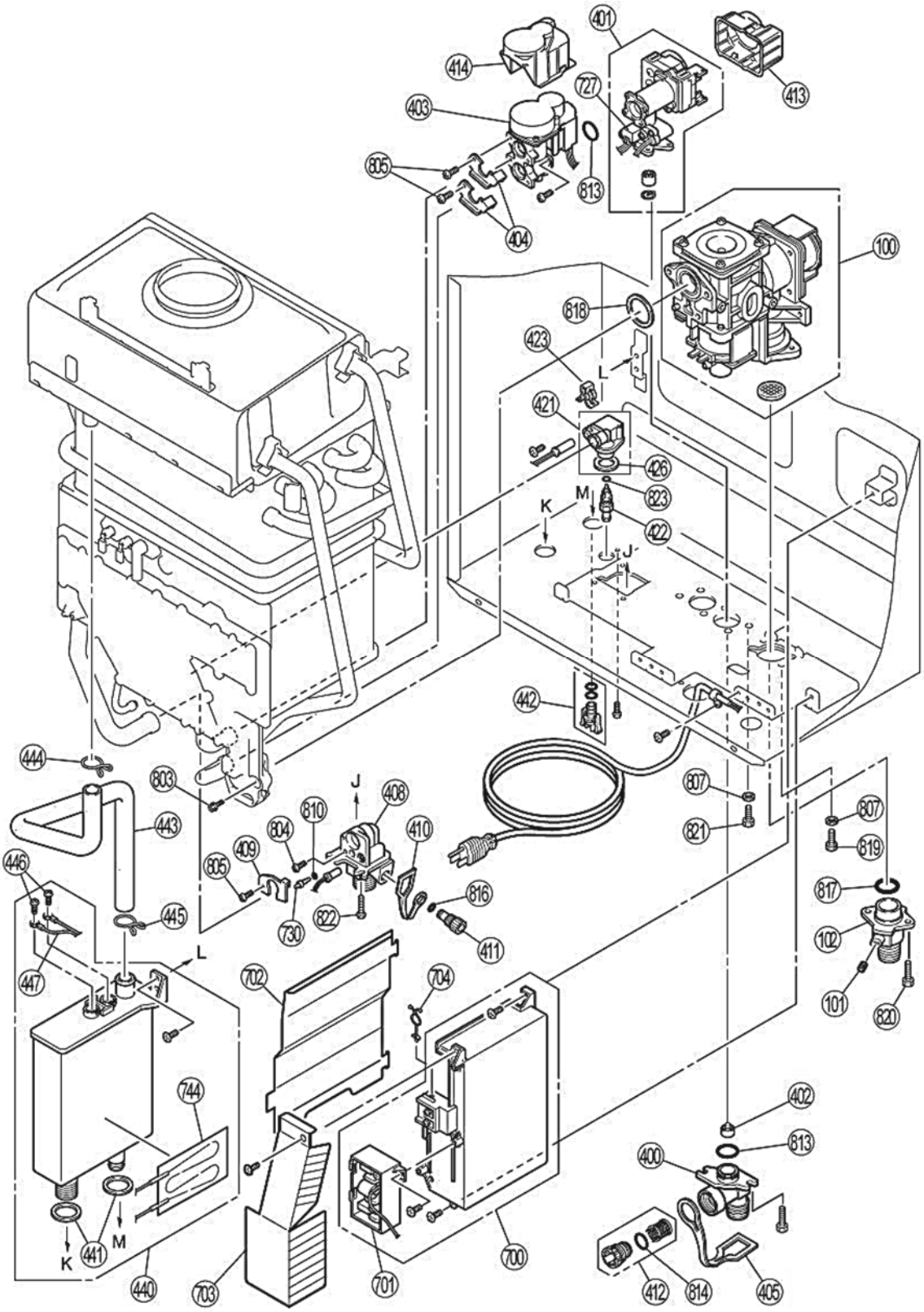

BRADFORD WHITE
WATER HEATERS

No.	Description	TGHE-160I Part No.	TGHE-199I Part No.
730	Thermistor	105000108	105000108
744	Heater and Harness	105000106	105000106
803	Screw	CP-30627-414	CP-30627-414
804	Screw	U217-449	U217-449
805	Screw	ZAA0408UK	ZAA0408UK
807	Washer	AU48-174X01	AU48-174X01
810	O-ring	M10B-2-4*	M10B-2-4*
813	O-ring	---	M10B-2-18*
814	O-ring	M10B-2-16*	M10B-2-16*
815	O-ring	M10B-2-14*	M10B-2-14*
816	O-ring	M10B-2-7	M10B-2-7
817	O-ring	M10B-1-24*	M10B-1-24*
818	Packing	C36E1-6	C36E3-7
819	Screw	ZQAA0512UK	ZQAA0512UK
820	Screw	ZQAA0514UK	ZQAA0514UK
821	Screw	ZQAA0508UK	ZQAA0508UK
822	Screw	ZBA0512UK	ZBA0512UK
823	O-ring	M10B-2-5	M10B-2-5

BRADFORD WHITE®
WATER HEATERS

Water Heater Accessories

	Water Heater Accessories (For use on all Condensing models)	Part No.
-	Remote Controller Residential (98º-140ºF)	239-48788-00*
-	Remote Controller Commercial (>140ºF)	239-48789-00*
-	Manifold Electronic Controls Pack A	MSA-2M*
-	Manifold Electronic Controls Pack B	MSA-2S*
-	EZ Connect Cable	REU-EZC-1US*
-	Condensing Roof Discharge Terminal 38"	184162PP*
-	Condensing 12" Horizontal Terminal Kit	223176PP*
-	Condensing 21" Horizontal Terminal Kit	223177PP*
-	Condensating Raised Horizontal Terminal Kit	224047PP*
-	Condensing 45º Vent Pipe Elbow 2 Pcs.	224077PP*
-	Condensing 19.5" Vent Pipe Extension	224079PP*
-	Condensing 39" Vent Pipe Extension	224080PP*
-	Condensing 90º Vent Pipe Elbow	224078PP*
-	Condensing 10" Vent Pipe Extension	224087PP*
-	Water Heater Pipe Cover Condensing Product	PCD07-SM*
-	Water Heater Pipe Cover Bottom Panel-Condensing	PCD07-SM-BP*

BRADFORD WHITE®
WATER HEATERS

NOTES

BRADFORD WHITE®

WATER HEATERS

Ambler, PA

For U.S. and Canada field service,
contact your professional installer or
local Bradford White sales representative.

Sales/**800-523-2931**
*Fax/**215-641-1670***
*Parts Fax/**215-641-2180***

Technical Support/**800-334-3393**
*Fax/**269-795-1089***

Warranty/**800-531-2111**
*Fax/**269-795-1089***

International:
Telephone/**215-641-9400**
*Telefax/**215-641-9750***

BRADFORD WHITE-CANADA® INC.

Mississauga, ON

Sales/**866-690-0961**
905-238-0100

*Fax/**905-238-0105***

Technical Support/**800-334-3393**

Email
parts@bradfordwhite.com
techserv@bradfordwhite.com

www.bradfordwhite.com