BRADFORD WHITE®

WATER HEATERS

REPLACEMENT PARTS LIST

Everhot® Interior Tankless Gas Models

TG-150I-(N,X)
TG-180I-(N,X)
TG-199I-(N,X)
TG-237I-(N,X)(A)

EVERHOT®
ADVANCED **TANKLESS** WATER HEATERS

Effective: September, 2011
ECO 7712

NOTE: BOTH MODEL AND SERIAL NUMBERS ARE REQUIRED FOR ORDERING REPLACEMENT PARTS

Dimensions and specifications subject to change without notice.

Parts Book #238-48124-00c

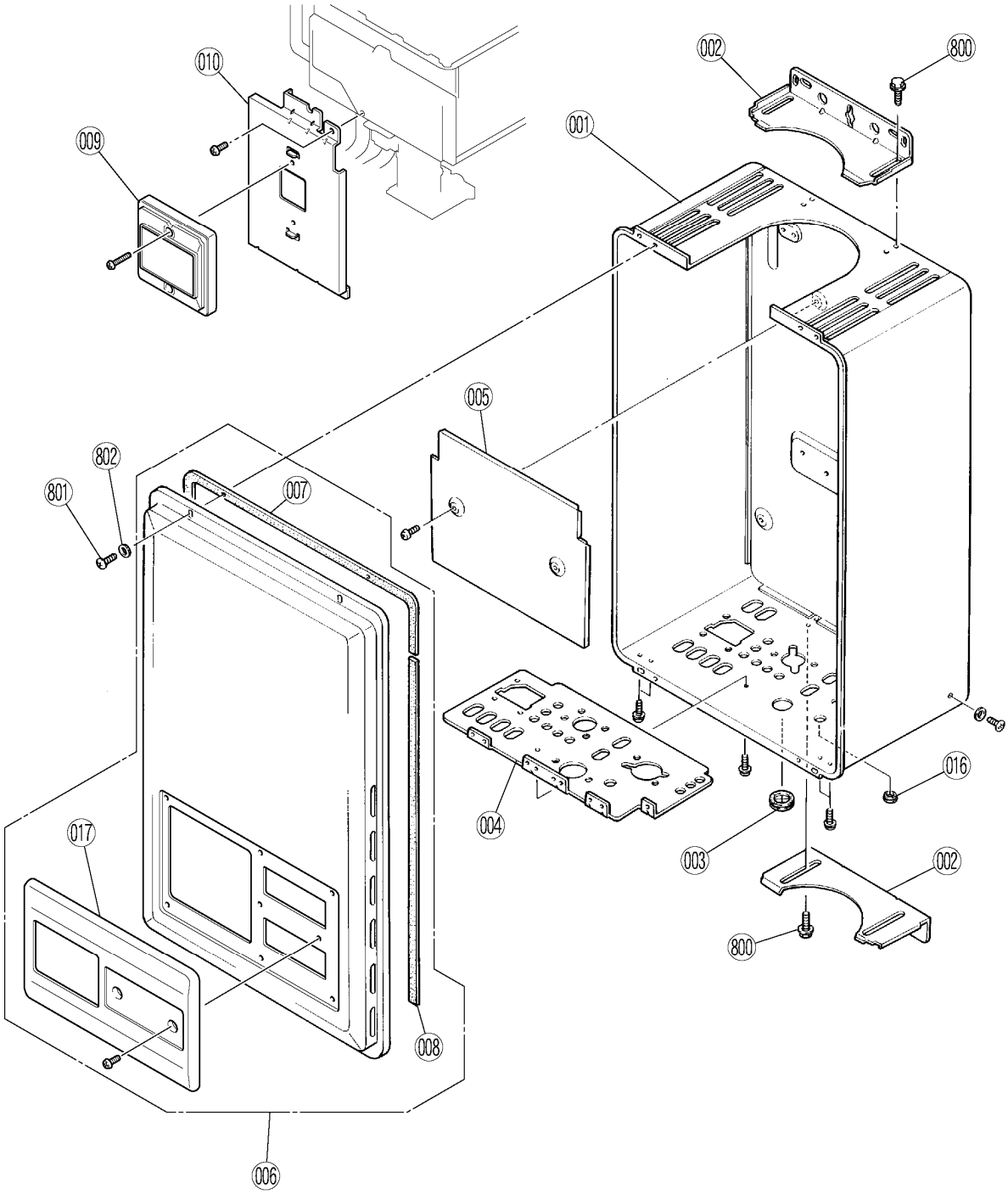

BRADFORD WHITE®
WATER HEATERS

Item	Description	Model TG-150I-(N,X)	Model TG-180I-(N,X)	Model TG-199I-(N,X)
001	Main Body	109000088	109000088	109000088
002	Wall Fitting Bracket	109000024	109000024	109000024
003	Rubber Bushing	U245-125	U245-125	U245-125
004	Connection Reinforcement Panel	109000023	109000023	109000023
005	Heat Protection Plate	U245-107	U245-107	U245-107
006	Front Panel	109000089	109000089	109000089
007	Front Panel Packing	U245-3185-2	U245-3185-2	U245-3185-2
008	Main Body Packing Side	U245-3185-1	U245-3185-1	U245-3185-1
009	Main Remote Controller	239-47806-00*	239-47806-00*	239-47806-00*
010	Remote Controller Bracket	103000011	103000011	103000011
016	Rubber Bushing	AU105-113	AU105-113	AU105-113
017	Decoration Panel	U245-2314	U245-2314	U245-2314
800	Screw	ZIHD0510UK	ZIHD0510UK	ZIHD0510UK
801	Screw	CP-30580	CP-30580	CP-30580
802	Resin Washer	CF83-41430	CF83-41430	CF83-41430

*Denotes component is stocked by Bradford White Corporation.
▲Component to be replaced by 105000067, upon inventory depletion.

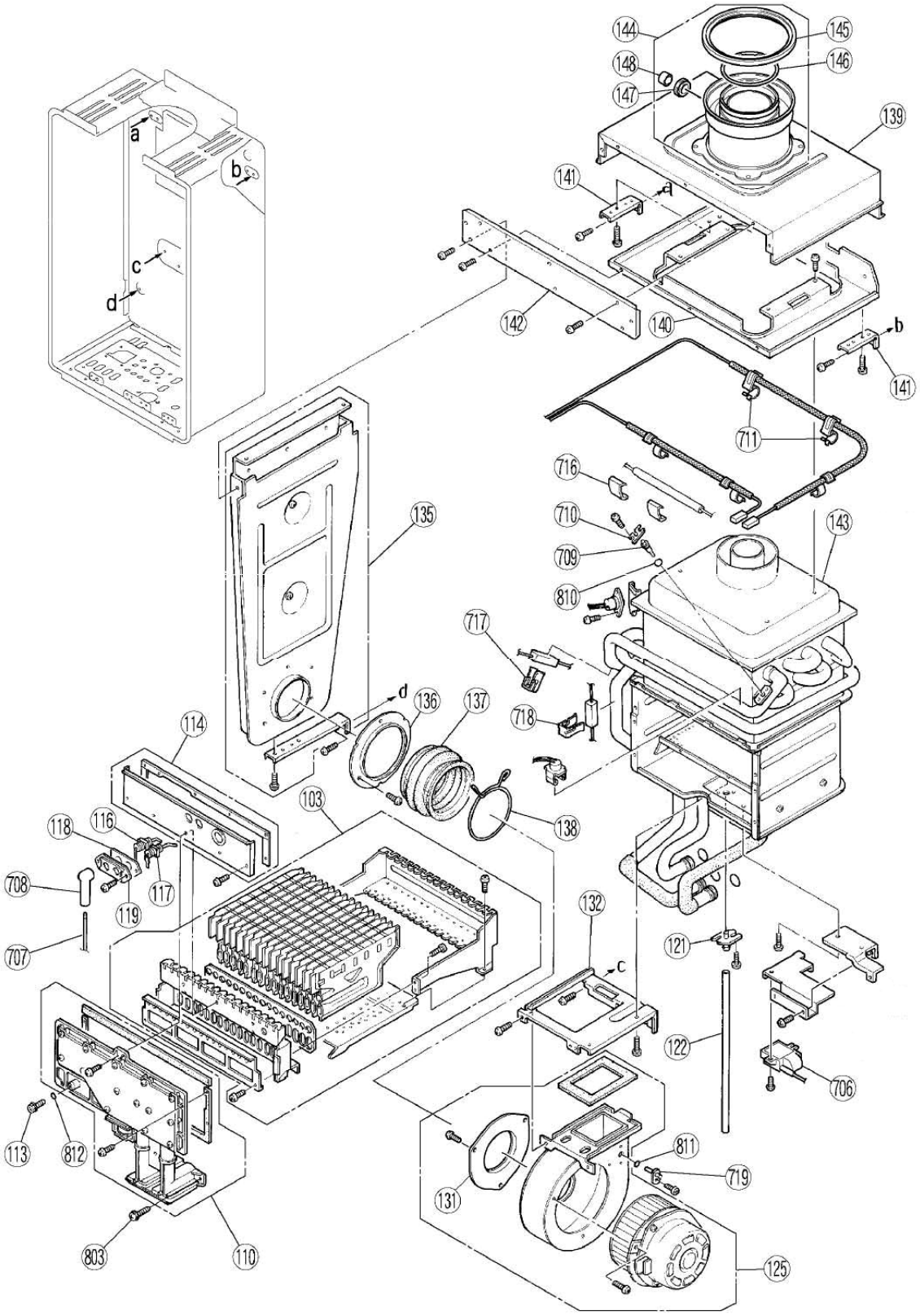

BRADFORD WHITE
WATER HEATERS

Item	Description	Model TG-150I-(N,X)	Model TG-180I-(N,X)	Model TG-199I-(N,X)
103	24 Burner Unit Assembly（LPG)	106000011	106000011	106000011
	24 Burner Unit Assembly（NG)	106000012	106000012	106000012
110	Manifold Assembly (LPG)	106000013	106000013	106000013
	Manifold Assembly (NG)	106000014	106000014	106000014
113	Pressure Point Sealing Screw	C10D-5	C10D-5	C10D-5
114	Combustion Chamber Sightglass Plate	106000016	106000016	106000016
116	Electrode	104000023*	104000023*	104000023*
117	FR Electrode	104000022*	104000022*	104000022*
118	Electrode Packing	AH66-398X01	AH66-398X01	AH66-398X01
119	Electrode Holder	AH66-393	AH66-393	AH66-393
121	Back Pressure Joint	U242-312	U242-312	U242-312
122	Pressure Tube C	AU161-665-CX01	AU161-665-CX01	AU161-665-CX01
125	Fan Motor All Assembly	104000061*	104000061*	104000061*
131	Joint Fixing Pipe	U245-566	U245-566	U245-566
132	Combustion Chamber Bracket	U245-255X01	U245-255X01	U245-255X01
135	Air Inlet Box All Assembly	108000013	108000013	108000013
136	Joint Bracket	U245-408	U245-408	U245-408
137	Connecting Joint	U245-409X01	U245-409X01	U245-409X01
138	Joint Fixing Bracket	U245-567	U245-567	U245-567
139	Air Inlet Duct	108000014	108000014	108000014
140	Joint Exhaust Tube Frame	U245-434X02	U245-434X02	U245-434X02
141	Joint Exhaust Tube Frame Supporter	U245-435	U245-435	U245-435
142	Air Inlet Box Cover	U245-419	U245-419	U245-419
143	Heat Exchanger Assembly	104000032*	104000032*	104000030*
144	Flue Connection Assembly	104000051	104000051	104000051
	Flue Connection Assembly - Male (Optional)	104000052	104000052	104000052
145	O-ring	108000017*	108000017*	108000017*
146	O-ring	108000018*	108000018*	108000018*
147	Pipe Seal	108000019	108000019	108000019
148	Cap	108000020	108000020	108000020
706	Igniter	105000068*	105000068*	105000068*
707	High Tension Cord	105000019	105000019	105000019
708	Electrode Sleeve	AU206-218	AU206-218	AU206-218
709	Thermistor	105000020	105000020	105000020
710	Thermistor Retainer (Large)	CP-90172	CP-90172	CP-90172
711	Temperature Fuse Clip	U217-676X02	U217-676X02	U217-676X02
716	Heater Fixing Plate B	CF-29-742	CF-29-742	CF-29-742
717	Heater Fixing Plate A	AU111-653	AU111-653	AU111-653
718	Heater Fixing Plate C	AU100-721	AU100-721	AU100-721
719	Air Thermistor	105000029	105000029	105000029
803	Screw	108000021*	108000021*	108000021*
810	O-ring	M10B-2-4*	M10B-2-4*	M10B-2-4*
811	O-ring	M10B-2-3*	M10B-2-3*	M10B-2-3*
812	O-ring	M10B-13-4*	M10B-13-4*	M10B-13-4*

*Denotes component is stocked by Bradford White Corporation.
▲Component to be replaced by 105000067, upon inventory depletion.

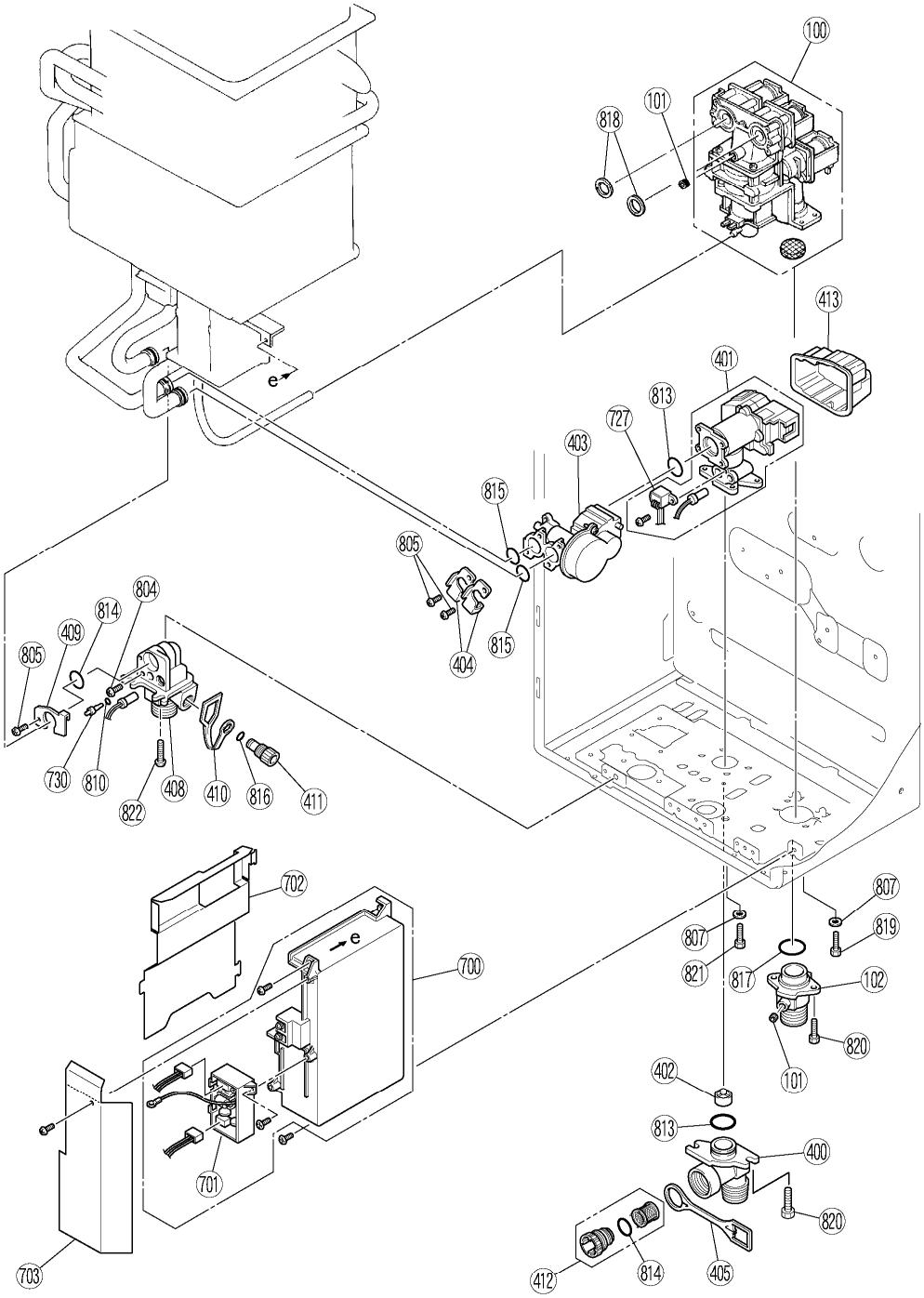

BRADFORD WHITE®
WATER HEATERS

Item	Description	Model TG-150I-(N,X)	Model TG-180I-(N,X)	Model TG-199I-(N,X)
100	Gas Control Assembly	104000021*	104000021*	104000021*
101	Test Port Set Screw	AU39-965X01	AU39-965X01	AU39-965X01
102	3/4" NPT Gas Inlet	CU195-1866	CU195-1866	CU195-1866
400	3/4" NPT Water Inlet B	H73-501-2	H73-501-2	H73-501-2
401	Water Flow Servo & Sensor Assembly	104000029*	104000029*	104000028*
402	Rectifier	M8D1-15X01	M8D1-15X01	M8D1-15X01
403	By-pass Servo Assembly	104000198*	104000198*	104000198*
404	Stop Bracket	AU195-321X01	AU195-321X01	AH69-310
405	Plug Band	109000018	109000018	109000018
408	3/4" NPT Hot Water Outlet	U245-865-3	U245-865-3	U245-865-3
409	Stop Bracket	AU162-1876X01	AU162-1876X01	AU162-1876X01
410	Plug Band (small)	109000019	109000019	109000019
411	Drain Valve	107000021	107000021	107000021
412	Filter Plug Assembly	H98-510-S*	H98-510-S*	H98-510-S*
413	Cover	109000020	109000020	109000020
700	Printed Circuit Board Assembly	104000131*	104000131*	104000063*
701	Surge Protector	U250-1602-2*▲	U250-1602-2*▲	U250-1602-2*▲
	Surge Protector with Terminal (Optional)	104000057	104000057	104000057
702	PCB Cover - Side	105000015	105000015	105000015
703	PCB Cover - Front	105000017	105000017	105000017
727	MR Sensor	105000041*	105000041*	105000041*
730	Thermistor	H111-650*	H111-650*	H111-650*
804	Thermistor Stop Screw	U217-449	U217-449	U217-449
805	Screw	ZAA0408UK	ZAA0408UK	ZAA0408UK
807	Resin Washer	AU48-174	AU48-174	AU48-174
810	O-ring	M10B-2-4*	M10B-2-4*	M10B-2-4*
813	O-ring	M10B-2-18*	M10B-2-18*	M10B-2-18*
814	O-ring	M10B-2-16*	M10B-2-16*	M10B-2-16*
815	O-ring	M10B-2-14*	M10B-2-14*	M10B-2-14*
816	O-ring	M10B-2-7*	M10B-2-7*	M10B-2-7*
817	O-ring	M10B-1-24*	M10B-1-24*	M10B-1-24*
818	Packing	C36E1-6*	C36E1-6*	C36E1-6*
819	Screw	ZAG0512UK	ZAG0512UK	ZAG0512UK
820	Screw	ZQAA0514UK	ZQAA0514UK	ZQAA0514UK
821	Screw	ZQAA0508UK	ZQAA0508UK	ZQAA0508UK
822	Screw	ZBA0512UK	ZBA0512UK	ZBA0512UK

*Denotes component is stocked by Bradford White Corporation.
▲Component to be replaced by 105000067, upon inventory depletion.

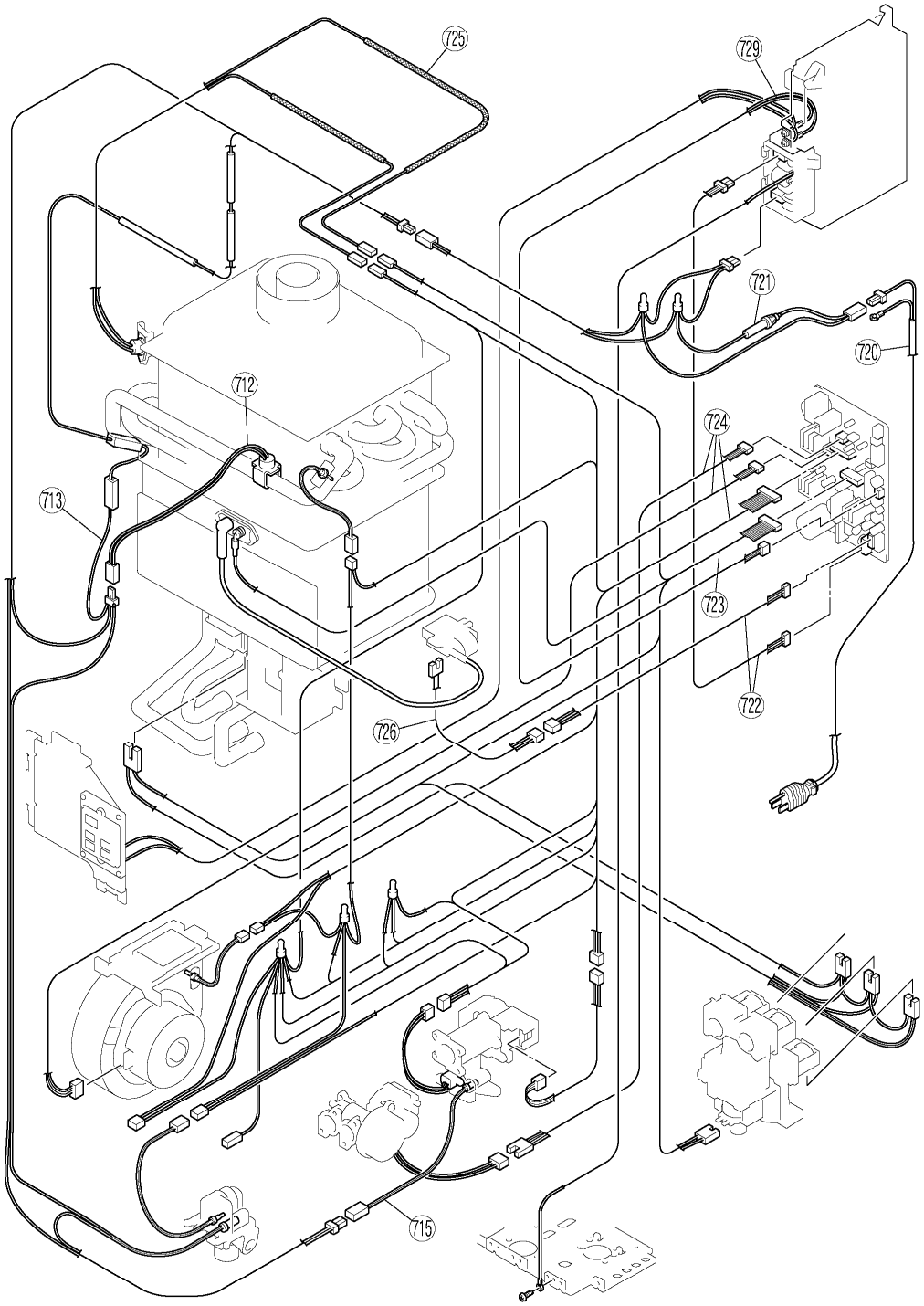

BRADFORD WHITE®
WATER HEATERS

Item	Description	Model TG-150I-(N,X)	Model TG-180I-(N,X)	Model TG-199I-(N,X)
712	Frost Sensing Switch	U242-511	U242-511	U242-511
713	Anti Frost Heater (120V)	105000022	105000022	105000022
715	Valve Heater (120V) Assembly	105000024	105000024	105000024
720	Power Cord	CP-90580	CP-90580	CP-90580
721	Fuse Harness(FF)	105000069	105000069	105000069
722	Power Harness	105000033	105000033	105000033
723	Solenoid Valve Harness	105000034	105000034	105000034
724	Sensor Harness	105000036	105000036	105000035
725	Thermal Fuse Harness	105000039	105000039	105000039
726	Sparker Harness	105000040	105000040	105000040
729	Remote Controller Harness	105000042	105000042	105000042

*Denotes component is stocked by Bradford White Corporation.
▲Component to be replaced by 105000067, upon inventory depletion.

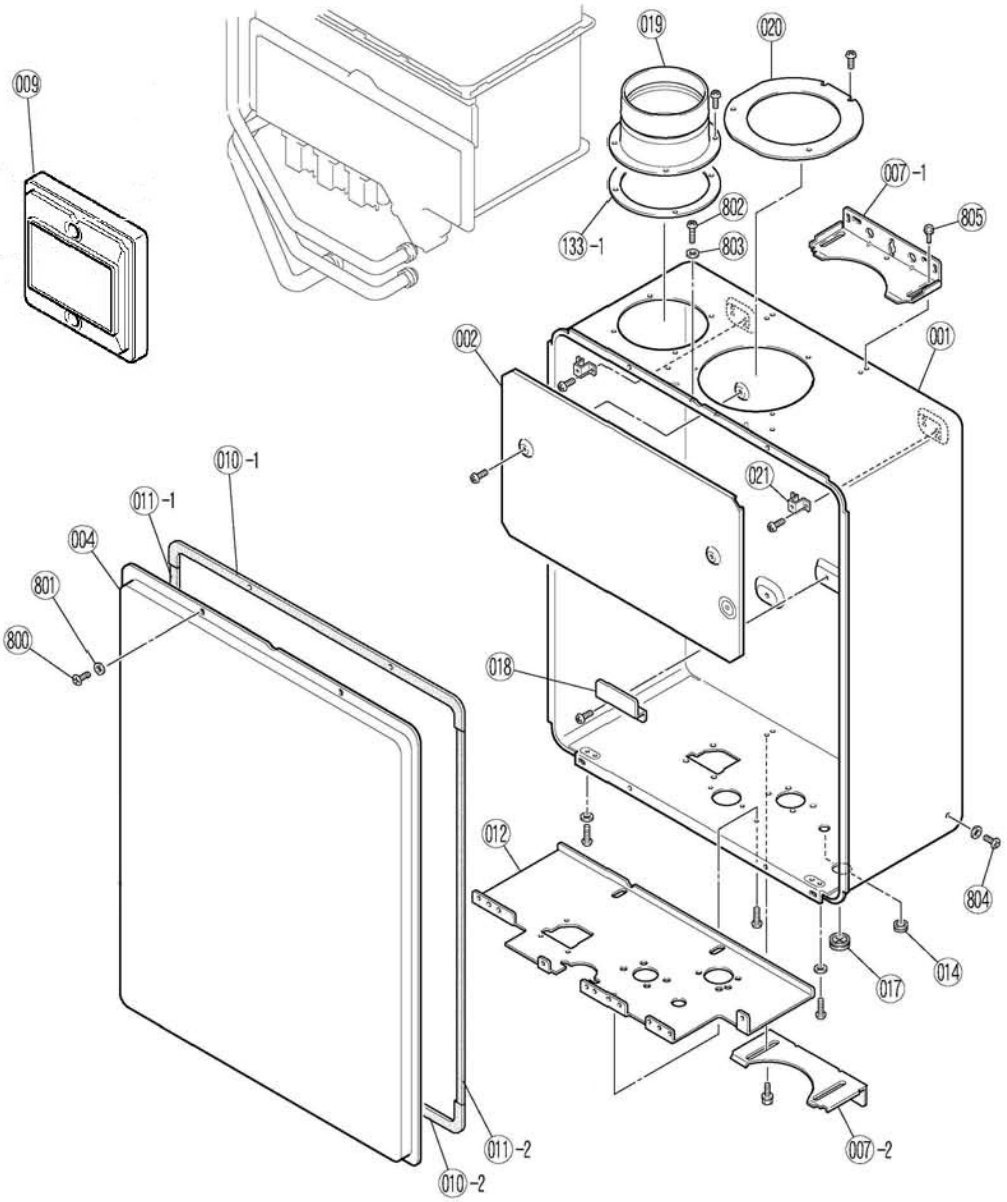

BRADFORD WHITE
WATER HEATERS

Item	Description	Model TG-237I-(N,X)	Model TG-237I-(N,X)A
001	Main Body	109000061	109000061
002	Heat Protection Plate	H73-065	H73-065
004	Front Panel Assembly	109000062	109000062
007	Wall Fitting Bracket	109000064	109000064
009	Main Remote Controller	239-47806-00*	239-47806-00*
010	Front Panel Packing-Top	BU195-167	BU195-167
011	Front Panel Packing-Side	109000065	109000065
012	Connection Reinforcement Panel	U273-115	U273-115
014	Seal Packing	AU105-113	AU105-113
017	Rubber Bushing	CF79-41020-A	CF79-41020-A
018	Reinforcement Plate	U273-113	U273-113
019	Air Intake Vent	BH67-320-2	BH67-320-2
020	Seal Plate	U273-111	U273-111
021	Duct Bracket	U273-103	U273-103
133	Packing	BH37-323	BH37-323
800	Screw	CP-30580	CP-30580
801	Washer	AU33-184	AU33-184
802	Screw	ZBD0508UD	ZBD0508UD
803	Washer	AU48-174	AU48-174
804	Screw	ZFDB0408UD	ZFDB0408UD
805	Screw	ZIHD0510UK	ZIHD0510UK

*Denotes component is stocked by Bradford White Corporation.
▲Component to be replaced by 105000067, upon inventory depletion.

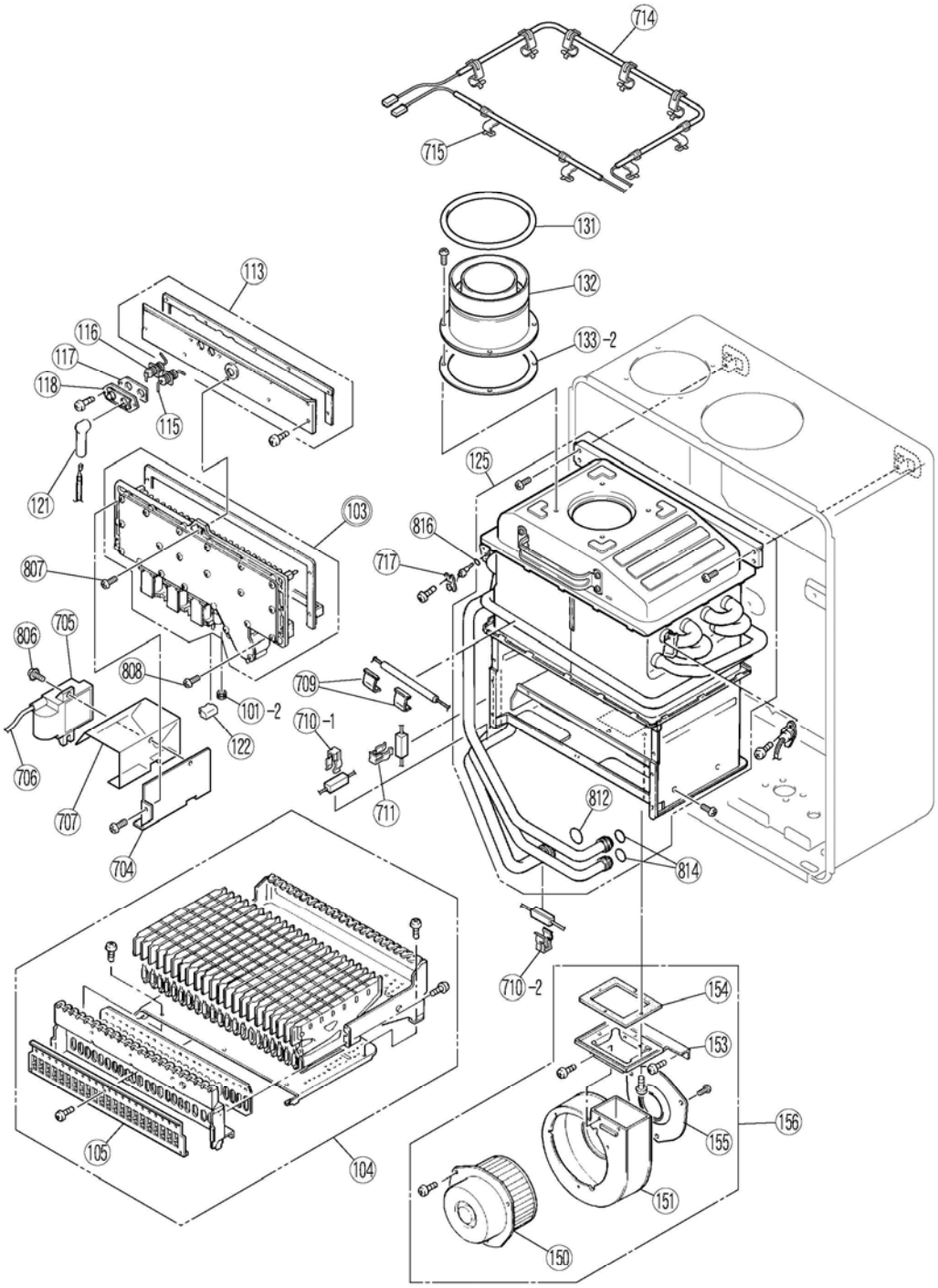

BRADFORD WHITE
WATER HEATERS

Item	Description	Model TG-237I-(N,X)	Model TG-237I-(N,X)A
101	Screw	AU39-965	AU39-965
103	Manifold Assembly (LPG)	U273-200-AX01*	U273-200-AX01*
	Manifold Assembly (NG)	U273-200-BX02*	U273-200-BX02*
104	Burner Unit Assembly (LPG)	U273-240-B*	U273-240-B*
	Burner Unit Assembly (NG)	106000024*	106000024*
105	Damper (LPG)	U273-235	U273-235
	Damper (NG)	106000025	106000025
113	Combustion Chamber Front Plate	U211-266-2	U211-266-2
115	Electrode	104000023*	104000023*
116	Flame Rod	U250-295	U250-295
117	Electrode Packing	AH66-398	AH66-398
118	Electrode Holder	AH66-393	AH66-393
121	Electrode Sleeve	AU206-218	AU206-218
122	Solenoid Valve Cover	U211-1027	U211-1027
125	Heat Exchanger Complete Assembly	104000048*	104000048*
131	Flue Outlet Vent Packing	BH29-486-C	BH29-486-C
132	Flue Outlet Vent Assembly	U273-260	U273-260
133	Packing	BH37-323	BH37-323
150	Blower Motor	U250-565	U250-565
151	Fan Casing Assembly	U218-565	U218-565
153	Fan Connecting Bracket	U273-335	U273-335
154	Fan Connecting Packing	U211-552	U211-552
155	Bell Mouth	BH51-611	BH51-611
156	Fan Motor Assembly	U273-330-B	U273-330-B
704	Igniter Bracket	U273-225	U273-225
705	Igniter	105000068*	105000068*
706	High Tension Code	BH38-710-240	BH38-710-240
707	Igniter Cover	U273-226	U273-226
709	Anti-Frost Heater Clip	CF29-742	CF29-742
710	Anti-Frost Heater Clip	105000027	105000027
711	Anti-Frost Heater Clip	AU124-618	AU124-618
714	Thermal Fuse Harness	105000055*	105000055*
715	Thermal Fuse Clip	CP-80531	CP-80531
717	Thermistor Clip	CP-90172	CP-90172
806	Screw	CP-80452	CP-80452
807	Screw	ZFDB0412SZ	ZFDB0412SZ
808	Screw	CP-30627-412	CP-30627-412
812	O-ring	M10B-2-18*	M10B-2-18*
814	O-ring	M10B-2-14*	M10B-2-14*
816	O-ring	M10B-2-4*	M10B-2-4*

*Denotes component is stocked by Bradford White Corporation.
▲Component to be replaced by 105000067, upon inventory depletion.

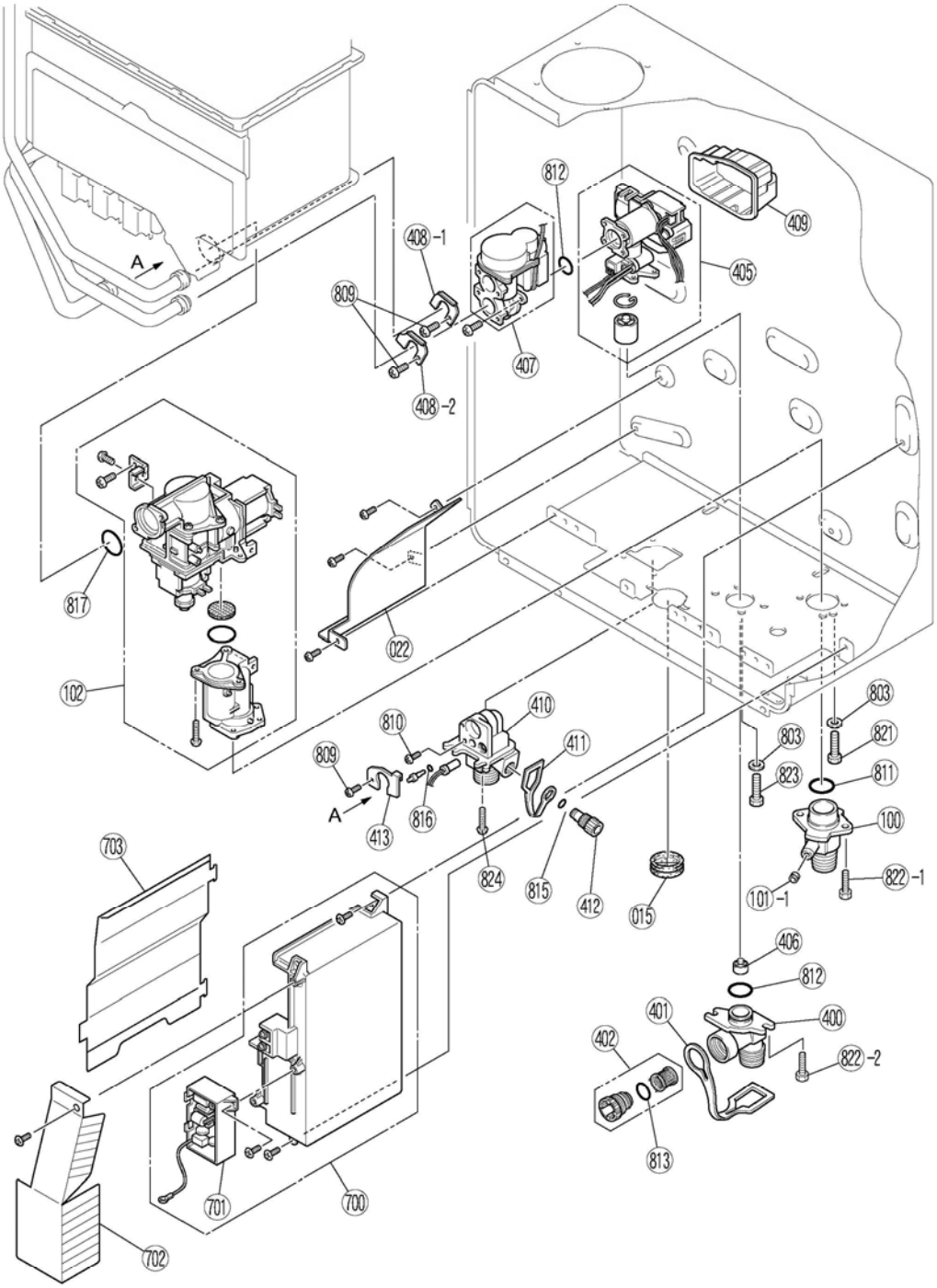

BRADFORD WHITE
WATER HEATERS

Item	Description	Model TG-237I-(N,X)	Model TG-237I-(N,X)A
015	Rubber Bushing	U245-125	U245-125
022	Fan Rectifier	U273-130	U273-130
100	Gas Connection	CU195-1866	CU195-1866
101	Screw	AU39-965	AU39-965
102	Gas Control Assembly	104000066*	104000066*
400	3/4" NPT Water Inlet	H73-501-2	H73-501-2
401	Plug Band	U250-631	U250-631
402	Water Filter Assembly	H98-510-S*	H98-510-S*
405	Water Flow Servo & Sensor Assembly	M8E-15-2-A*	M8E-15-2-A*
406	Rectifier	M8D1-15	M8D1-15
407	Bypass-Servo Assembly	104000198*	104000198*
408	Stop Bracket	AH69-310	AH69-310
409	Water Flow Servo Cover	H112-508	H112-508
410	Hot Water Outlet	U273-320	U273-320
411	Plug Band	AU103-413	AU103-413
412	Drain Valve	AU142-444	AU142-444
413	Stop Bracket	U211-322	U211-322
700	Printed Circuit Board Assembly	104000065*	104000065*
701	Surge Protector	U250-1602-2*▲	U250-1602-2*▲
	Surge Protector with Terminal (Optional)	104000057	104000057
702	Printed Circuit Board Cover-Front	U273-355-US	U273-355-US
703	Printed Circuit Board Cover-Side	105000015	105000015
803	Washer	AU48-174	AU48-174
809	Screw	CP-20883-408UK	CP-20883-408UK
810	Screw	U217-449	U217-449
811	O-ring	M10B-1-24*	M10B-1-24*
812	O-ring	M10B-2-18*	M10B-2-18*
813	O-ring	M10B-2-16*	M10B-2-16*
815	O-ring	M10B-2-7*	M10B-2-7*
816	O-ring	M10B-2-4*	M10B-2-4*
817	Packing	C36F8-1*	C36F8-1*
821	Screw	ZQAA0512UK	ZQAA0512UK
822	Screw	ZQAA0514UK	ZQAA0514UK
823	Screw	ZQAA0508UK	ZQAA0508UK
824	Screw	ZBA0512UK	ZBA0512UK

*Denotes component is stocked by Bradford White Corporation.
▲Component to be replaced by 105000067, upon inventory depletion.

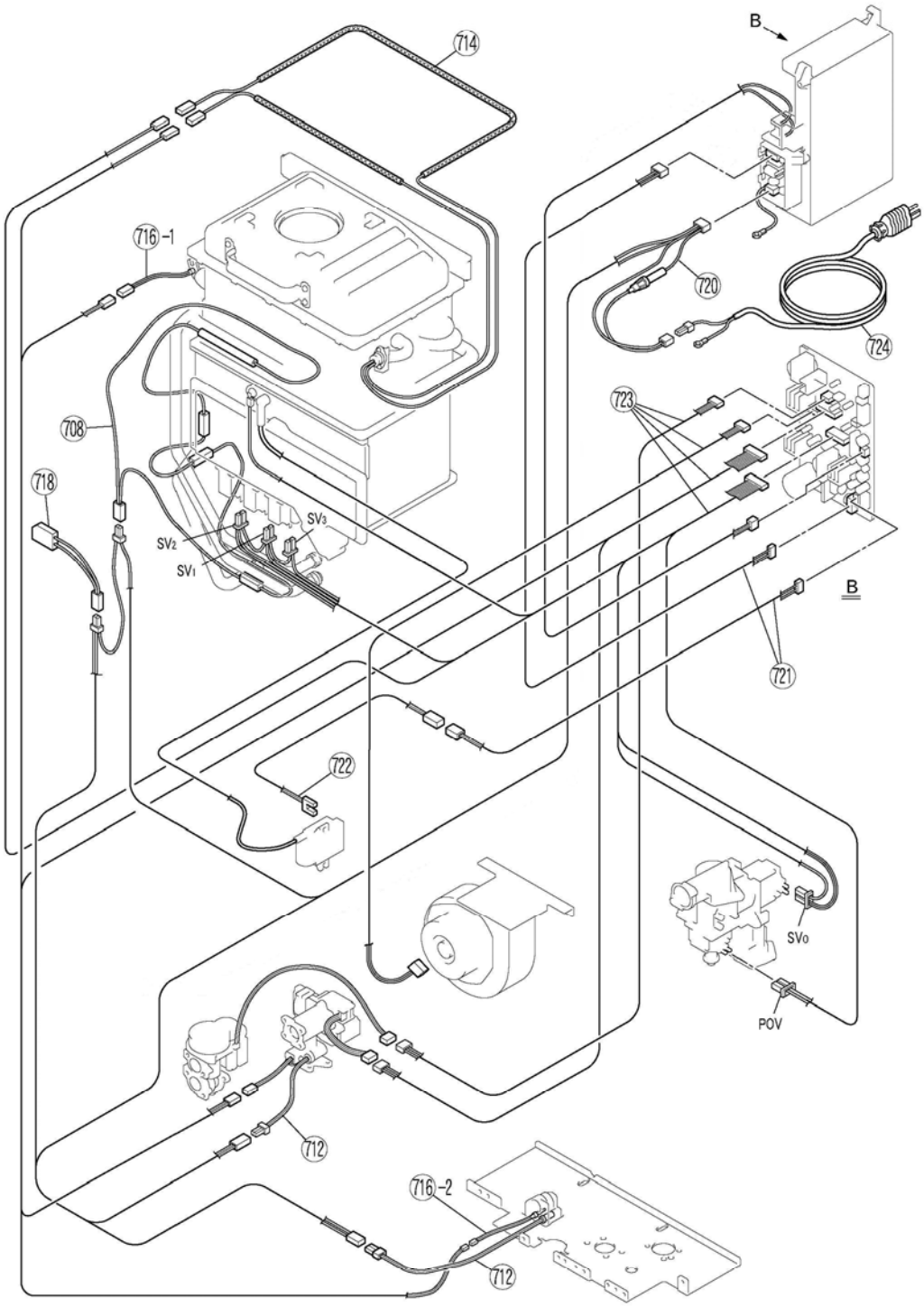

BRADFORD WHITE®
WATER HEATERS

Item	Description	Model TG-237I-(N,X)	Model TG-237I-(N,X)A
708	120V Anti-Frost Heater Assembly	U273-382	U273-382
712	120V Valve Heater Assembly	U273-381	U273-381
714	Thermal Fuse Harness	105000055*	105000055*
716	Thermistor	H111-650*	H111-650*
718	Frost Sensing Switch	H73-750	H73-750
720	Fuse Harness	U273-370-2	U273-370-2
721	Power Supply Harness	105000056	105000056
722	Igniter Harness	U273-372	U273-372
723	Sensor Harness	105000057	105000057
724	Power Cord	CP-90580	CP-90580

*Denotes component is stocked by Bradford White Corporation.
▲Component to be replaced by 105000067, upon inventory depletion.

Water Heater Accessories

	Water Heater Accessories (For use on all models)	
-	Remote Controller Residential (98°-140°F)	239-47806-00*
-	Remote Controller Commercial (>140°F)	239-47805-00*
-	Manifold Electronic Controls Pack A	MSB-M*
-	Manifold Electronic Controls Pack B	MSB-C1*
-	EZ Connect Cable	REU-EZC-1US*
-	Roof Flashing Assembly-Flat Roof	146141*
-	Pipe Clamps	169044*
-	Roof Discharge Termination 18" Above Roof	184118-S*
-	Rubber Roof Flashing (6/12 to 12/12 Pitch)	189951*
-	Rubber Roof Flashing (8/12 to 16/12 Pitch)	189952*
-	Wall Discharge Terminal 12" (All Weather)	223157*
-	45° Elbow (Qty 2)	224050*
-	10" Vent Pipe Extension	224051*
-	19.5" Vent Pipe Extension	224052*
-	39" Vent Pipe Extension	224053*
-	90° Elbow	224063*
-	Condensate Collector 6"	224069*
-	Horizontal Discharge Adaptor	50710327*
-	All Weather Termination (12")	STDKITVA-A*
-	All Weather Termination (21")	STDKITVA-A21*

	Water Heater Accessories (For use on TG-237 models ONLY)	
-	Universal Appliance Adapter	FSAAU4SP*
-	Bird Screen Assembly 4"	FSBS4SP*
-	Support Clamp 4" (Qty. 6)	FSCL4*
-	Concentric Termination Kit (Wall Mount)	FSDVWMT04LH*
-	Remote Concentric Termination	FSDVWT4*
-	45° Elbow (4")	FSELB4504SP*
-	90° Elbow (4")	FSELB9004SP*
-	Vertical Condensate Drain (4")	FSUCD4SP*
-	Venting Length 4" x 12"	FSVL1204SP*
-	Venting Length 4" x 24"	FSVL2404SP*
-	Venting Length 4" x 36"	FSVL3604SP*
-	Vertical Venting Kit	FSVPK4*
-	Horizontal Venting	FSWMKBS4-M*

*Denotes component is stocked by Bradford White Corporation.
▲Component to be replaced by 105000067, upon inventory depletion.

NOTES

BRADFORD WHITE®

WATER HEATERS

Ambler, PA

For U.S. and Canada field service,
contact your professional installer or
local Bradford White sales representative.

Sales/**800-523-2931**
*Fax/**215-641-1670***
*Parts Fax/**215-641-2180***

Technical Support/**800-334-3393**
*Fax/**269-795-1089***

Warranty/**800-531-2111**
*Fax/**269-795-1089***

International:
Telephone/**215-641-9400**
*Telefax/**215-641-9750***

BRADFORD WHITE-CANADA® INC.

Mississauga, ON

Sales/**866-690-0961**
905-238-0100

*Fax/**905-238-0105***

Technical Support/**800-334-3393**

Email
parts@bradfordwhite.com
techserv@bradfordwhite.com

www.bradfordwhite.com