Installation and
Operation Instructions for

Brute MagnaTech®

Modulating Boiler	Water Heater
Model BMGH1600 1,600 MBTU/h	Model BMGV1600 1,600 MBTU/h
Model BMGH2000 1,999 MBTU/h	Model BMGV2000 1,999 MBTU/h
Model BMGH2500 2,499 MBTU/h	Model BMGV2500 2,499 MBTU/h
Model BMGH3000 3,000 MBTU/h	Model BMGV3000 3,000 MBTU/h
Model BMGH3500 3,500 MBTU/h	Model BMGV3500 3,500 MBTU/h
Model BMGH4000 4,000 MBTU/h	Model BMGV4000 4,000 MBTU/h

FOR YOUR SAFETY: This product must be installed and serviced by a professional service technician, qualified in hot water boiler and heater installation and maintenance. Improper installation and/or operation could create carbon monoxide gas in flue gases which could cause serious injury, property damage, or death. Improper installation and/or operation will void the warranty.

⚠ WARNING

If the information in this manual is not followed exactly, a fire or explosion may result causing property damage, personal injury or loss of life.

Do not store or use gasoline or other flammable vapors and liquids in the vicinity of this or any other unit.

WHAT TO DO IF YOU SMELL GAS

- Do not try to light any unit.
- Do not touch any electrical switch; do not use any phone in your building.
- Immediately call your gas supplier from a nearby phone. Follow the gas supplier's instructions.
- If you cannot reach your gas supplier, call the fire department.

Installation and service must be performed by a qualified installer, service agency, or gas supplier.

⚠ AVERTISSEMENT

Assurez-vous de bien suivres les instructions données dans cette notice pour réduire au minimum le risque d'incendie ou d'explosion ou pour éviter tout dommage matériel, toute blessure ou la mort.

Ne pas entreposer ni utiliser d'essence ni d'autres vapeurs ou liquides inflammables dans le voisinage de cet appareil ou de tout autre appareil.

QUE FAIRE SI VOUS SENTEZ UNE ODEUR DE GAZ:

- Ne pas tenter d'allumer d'appareils.
- Ne touchez à aucun interrupteur. Ne pas vous servir des téléphones dansle bâtiment où vous êtes.
- Appelez immédiatement votre fournisseur de gaz depuis un voisin. Suivez les instructions du fournisseur.
- Si vous ne pouvez rejoindre le fournisseur de gaz, appelez le service des incendies.

L'installation et l'entretien doivent être assurés par un installateur ou un service d'entretien qualifié ou par le fournisseur de gaz.

H2403500-

BRADFORD WHITE®

Table of Contents

SECTION 1 General Information

1.A Introduction 1
1.B Model Identification 1
1.C Warranty 1
1.D Safety Notes 2
1.E Unit Overviews 4
1.F Gas Train Components 7
1.G Dimensions 8
1.H Unpacking 10
1.I Locating the unit 10
1.J Clearances 11

SECTION 2 Venting and Combustion Air

2.A General Venting Information 12
2.B Vent and Air Pipe Material 12
2.B.1 Venting Reqs Unique to Canada 12
2.B.1.a Flue Gas Sampling Port - 12
2.B.1.b Exhaust Vent Terminal - 13
2.C Vent and Air Pipe Sizing 14
2.C.1 Category IV Vent Sizes 15
2.C.2 Category II Vent Sizes 15
2.C.3 Common Venting 15
2.C.4 Common Vent Test 16
2.C.5 Combustion Air 17
2.C.5.a Combustion Air From Room 17
2.C.5.b Ducted Combustion Air 18
2.D Locating Vent and Comb Air Terminals 18
2.D.1 Side-wall Vent Terminal 18
2.D.2 Side-wall Combustion Air Terminal 20
2.D.3 Vertical Vent Terminal 20
2.D.4 Vertical Combustion Air Terminal 20
2.E Outdoor Installation 21
2.F Installations in the Commonwealth of Massachusetts 21

SECTION 3 Gas supply and Piping

3.A Gas Supply and Piping 22
3.B Gas Pipe Sizing 23

SECTION 4 Water Flow and Headloss Data

4.A General Water Flow Information 24
4.B Boiler Water Flow & Headloss Data ... 24
4.C Water Heater Water Flow and Headloss Data 25

SECTION 5 Piping

5.A Boiler Water Piping 26
5.A.1 Boiler Water Connections 26
5.A.2 Cold Water Make-Up 26
5.A.3 Freeze Protection 26
5.A.4 Suggested Boiler Piping Schematics
5.B Water Heaters 31
5.B.1 Water Quality 31
5.B.2 Heater Water Connections 31
5.B.3 Cold Water Make-Up 31
5.B.4 Freeze Protection 32
5.B.5 Suggested Piping Schematics 32

SECTION 6 Condensate Drain Trap 34

SECTION 7 Electrical Connections

7.A Installation Warnings 35
7.B Main Power Connections 36
7.C Control Panel Layout 37
7.D Field Connections 37
7.D.1 Power 37
7.D.2 Dry Contacts 37
7.D.3 Temperature Sensors 38
7.D.4 Heat Demands 39
7.D.5 Analog In and Analog Out 39
7.D.6 Dry Contacts. Run & Alarm 39
7.D.7 RS 485, for Cascade (Lead / Lag) 40
7.D.8 RS485 BMS 40
7.E Modbus and BACnet Memory Map 41
7.F Wiring Diagrams 44
7.G High Voltage Wiring Diagrams 48
7.H Ladder Diagrams 55

SECTION 8 Control Operation

8.A The Home Screen 58
8.A.1 Home Screen Active Icons 58
8.A.2 Keypad Operations 59
8.B Login to Lock / Unlock 60
8.C Quick Start 61
8.C.1 Quick Start CH (Central Heat) 61
8.C.2.a Quick Start CH1 (Central Heat, One) . 62
8.C.2.b Quick Start CH2 (Central Heat, Two) . 62
8.C.2 Quick Start DHW (Domestic Hot Water) 62
8.C.3 Quick Start Outdoor Reset 63
8.C.4 Quick Start Warm Weather Shut Down 63
8.C.5 Quick Start Anti-Short Cycle 64
8.C.6 Time & Date 64
8.D Configuration 65
8.D.1 CH (Central Heat) 66
8.D.1.a CH1 (Central Heat, One) 66
8.D.1.a.1 PID Parameters 67
8.D.1.b CH2. (Central Heat, Two) 67
8.D.2 DHW (Domestic Hot Water) 67
8.D.3 Outdoor Reset 68

SECTION 8 (continued)

8.D.4 Cascade (Lead / Lag) 69
8.D.4.a Cascade CH (Central Heat) 74
8.D.4.a.1 Cascade CH Lead Settings 75
8.D.4.a.1.A Cascade Base / Drop Load..... 75
8.D.4.b Cascade DHW (Dom Hot Water) 76
8.D.4.c Cascade Rotation 77
8.D.4.c.1 Cascade Rotation Setup 77
8.D.4.d Cascade Redundancy 78
8.D.5 Hybrid 78
8.D.6 Pumps 80
8.D.6.a Variable Speed Pump Control 80
8.D.7 Manual Firing Rate 81
8.D.8 Temp Limits 81
8.D.8.a Delta T Parameters 82
8.D.8.b Flue Limitation Parameters 82
8.D.8.c Outlet Limitation Parameters..... 82
8.D.9 External 83
8.D.9.a External – Remote Set Point 84
8.D.9.b External Firing Rate..... 85
8.D.10 Time & Date 85
8.D.11 Miscellaneous Features 86
8.D.11.a Demand Priority 87
8.D.11.b Anti-Short Cycle 87
8.D.11.c Warm Weather 88
8.D.11.d COM Port, BMS 89
8.D.11.e Temperature Conversion 90
8.D.11.f Anti-Frost 90
8.D.12 Login 91
8.E Service Screens..... 92
8.E.1 Burner..... 93
8.E.2 Digital I/O (Input / Output) 93
8.E.3 Analog I/O 94
8.E.4 Screen Settings Timeout 95
8.E.5 History 95
8.E.6 Restart Touchscreen & Recalibrate.... 96
8.E.7 Factory Reset..... 96
8.E.8 HMI Model OEM only. 96
8.E.9 BIC Model OEM only..... 96
8.E.10 Both Model OEM only..... 96
8.E.11 About About the Firmware..... 96
8.F Messages and USB 97
8.F.1 Messages 97
8.F.2 USB Functionality..... 97
8.G Active Demands 98

SECTION 9 Parameter Tables.....99

SECTION 10 Initial startup Instructions
10.A Filling the Boiler System..... 105
10.B Initial Operation 106
10.B.1 Initial Burner Operation 106
10.B.2 Combustion Setup Procedure 107
10.C Shutting Down the Unit..... 110
10.D Restarting the Unit..... 110
10.E Sequence of Operation 111
10.E.1 Pre-purge Open.....111
10.E.2 Pre-purge Closed 111
10.E.3 Transition to Pre-Ignition 111
10.E.4 Pre-Ignition.....111
10.E.5 Pilot Ignition.....111
10.E.6 Main Ignition 111
10.E.7 Run..... 112
10.E.8 Inter-Purge 112
10.E.9 Post-Purge 112
10.E.10 Lock-out..... 112

SECTION 11 Maintenance
11.A System Maintenance 113
11.B Maintenance Notes 113
11.B.1 Burner..... 113
11.B.2 Modulating Gas Valve / Venturi 113
11.B.3 Controller..... 114
11.B.4 Spark Ignition Electrodes 114
11.B.5 Flame Sensor..... 114
11.B.6 Blower 1600 114
11.B.7 Blower 2000-4000 114
11.B.8 Heat Exchanger Tubes..... 115
11.B.9 Gas Pressure Switches..... 115

SECTION 12 Troubleshooting 117

SECTION 13 Replacement Parts
13.A General Information..... 119
13.B Component Illustrations, Parts Lists, and Part Numbers ..... 119 - 134

BRADFORD WHITE®

SECTION 1 General Information

1.A Introduction

This manual includes information which will help you to install, operate, and maintain the Bradford White Brute MagnaTech high efficiency commercial boiler or volume water heater. Please read this manual completely before proceeding with the installation. If you have any questions regarding this equipment, please consult the manufacturer or your local manufaturers representative via the website listed on the back cover of this manual. Experience has shown that most operating problems are caused by improper installation.

1.B Model Identification

Primary information regarding your unit can be found on the **Rating Plate** on the outside face of the right-side panel.

1.C Warranty

Bradford White Brute MagnaTech boilers and volume water heaters are covered by a limited warranty. The owner should complete the warranty registration at

http://www.BradfordWhite.com

ALL WARRANTY CLAIMS must be made by an authorized Bradford White representative. Claims must include the serial number and model (this information can be found on the rating plate). All claims must also include the installation date and name of the installer. Shipping costs are not included in the warranty coverage.

1 2 3	4	5 6 7 8	9	10	11	12	13	14
B M G						3		

Series: B M G — Brute MagnaTech

Usage: H - Hydronic; V - Volume Water

Size / MBH: 1600, 2000, 2500, 3000, 3500, 4000

Fuel: N- Nat; P- LP

Construction: X- Standard; J- CSD-1

Electrical System:
- A- 120V, single ph (1600-2000)
- F- 208V, single ph (1600-2000)
- B- 220/240V, single ph (1600-2000)
- C- 208V, three ph (2000-4000)
- D- 480V, three ph (2000-4000)
- E- 600V, three ph (2000-4000)

Revision: 3- Third

Waterway Options

X- std MGH, 75psi PRV, H-Stamp	N- MGV w/ H-Stamp, 30psi PRV
W- std MGV, 125psi PRV, HLW-Stamp	P- MGV w/ H-Stamp, 50psi PRV
A- 30psi PRV	R- MGV w/ H-Stamp, 60psi PRV
B- 50psi PRV	S- MGV w/ H-Stamp, 75psi PRV
C- 60psi PRV	T- MGV w/ H-Stamp, 125psi PRV
D- MGV 75psi PRV	U- MGV w/ H-Stamp, 150psi PRV
E- MGH 125psi PRV	2- Flange kit, MGV w/ H-Stamp, 30psi PRV
F- 150psi PRV	3- Flange kit, MGV w/ H-Stamp, 50psi PRV
G- Flange kit & 30psi PRV	4- Flange kit, MGV w/ H-Stamp, 60psi PRV
H- Flange kit & 50psi PRV	5- Flange kit, MGV w/ H-Stamp, 75psi PRV
J- Flange kit & 60psi PRV	6- Flange kit, MGV w/ H-Stamp, 125psi PRV
K- Flange kit & 75psi PRV	7- Flange kit, MGV w/ H-Stamp, 150psi PRV
L- Flange kit & 125psi PRV	
M- Flange kit & 150psi PRV	

Additional Options

X- None	H- Gateway LONworks & alarm bell
A- Gateway, BACnet IP*	J- Gateway LONworks & high limits
B- Gateway, LONworks	K- Gateway LONworks & alarm bell & high limits
C- Alarm bell	L- Alarm & high limits
D- Auto & manual high limits	
E- Gateway BACnet IP* & alarm bell	
F- Gateway BACnet IP* & high limits	
G- Gateway BACnet IP* & alarm bell & high limits	

*BACnet Gateway is used for BACnet IP and Modbus TCP/ IP

1.D Safety Notes

Safety Notes are used thoughout this manual to bring attention to the presence of hazards with various risk levels and to offer important information concering the life of this product. There are 3 basic types.

1	⚠ WARNING	Indicates an imminently hazardous situation which, if not avoided, can or will result in death or serious injury and can or will result in catastrophic property damage.
2	⚠ CAUTION	Indicates a potentially hazardous situation which, if not avoided, may result in moderate injury and/or property damage.
3	NOTE:	Indicates instructions that are important to that topic but not related to personal injury or property damage.

⚠ WARNING

- Water temperature over 125°F (52°C) can cause severe burns instantly or death from scalds.
- Children, disabled and elderly are at highest risk of being scalded.
- See instruction manual before setting temperature at the unit.
- Feel water before bathing or showering.
- If this unit is used to produce water that could scald if too hot, such as domestic hot water use, adjust the outlet control (limit) or use temperature limiting valves to obtain a maximum water temperature of 125°F (52°C).

⚠ WARNING

Fire or Explosion Hazard

Improper configuration can cause fuel buildup and explosion. Improper user operation may result in property loss, severe physical injury, or death.

Any changes to safety-related configuration parameters must only be done by experienced and/or licensed burner/boiler operators and mechanics.

If any odor of gas is detected, or if the gas burner does not appear to be functioning in a normal manner, close the main gas shutoff valve. Do not shut off the power switch. Contact your heating contractor, gas company, or factory representative.

NOTE: This unit is protected against hydronic over-pressurization. A pressure relief valve is included with each unit.

⚠ WARNING

The inlet gas pressure to the unit must not exceed 13” W.C. (3.2kPa).

⚠ WARNING

This unit must be installed in accordance with the procedures detailed in this manual, or the manufacturers warranty will be voided. The installation must conform to the requirements of the local jurisdiction having authority, and, in the United States, to the latest edition of the National Fuel Gas Code, ANSI Z223.1/NFPA54. In Canada, the installation must conform to the latest edition of CSA B149.1 Natural Gas and Propane Gas Installation Code, and/or local codes. Where required by the authority having jurisdiction, the installation of these units must conform to the Standard for Controls and Safety Devices for Automatically Fired Boilers, ANSI/ASME CSD-1. Any modifications to the boiler, its gas controls, or wiring may void the warranty. If field conditions require modifications, consult the factory representative before initiating such modifications.

⚠ WARNING

Carbon Monoxide Hazard

Improper adjustment of the burners may lead to poor combustion quality, increasing the amount of carbon monoxide produced. Excessive carbon monoxide levels may lead to personal injury or death.

⚠ WARNING

CANCER AND REPRODUCTIVE HARM.
WWW.P65WARNINGS.CA.GOV.

AS REQUIRED BY THE STATE OF CALIFORNIA PROPOSITION 65.

⚠ WARNING

Electrical Shock Hazard

Electrical shock can cause severe injury, death or property damage. Disconnect the power supply before beginning installation or changing the wiring to prevent electrical shock or damage to the equipment. It may be necessary to turn off more than one power supply to disconnect.

All electrical wiring is to be done in accordance with local codes, or in the absence of local codes, with: 1) The National Electrical Code ANSI/NFPA No. 70 - latest Edition, or 2) CSA STD. C22.1 "Canadian Electrical Code - Part 1." This appliance must be electrically grounded in accordance with these codes.

⚠ WARNING

The Repair Parts list designates parts that contain refractory ceramic fibers (RCF). RCF has been classified as a possible human carcinogen. When exposed to temperatures above 180ºF, such as during direct flame contact, RCF changes into crystalline silica, a known carcinogen. When disturbed as a result of servicing or repair, these substances become airborne and, if inhaled, may be hazardous to your health.

Do not remove or replace RCF parts or attempt any service or repair work involving RCF without wearing the following protective gear:

1. A National Institute for Occupational Safety and Health (NIOSH) approved respirator.
2. Long sleeved, loose fitting clothing.
3. Gloves.
4. Eye Protection.

⚠ CAUTION

The supply voltage to this unit must not be disengaged, except for service or isolation, or unless otherwise instructed by procedures outlined in this manual. To signal a call for heat, use the correct terminals as instructed in the Electrical Connections, Field Wiring 7.D on page 37 of this manual.

NOTE: All installations must be made in accordance with 1) American National Standard Z223.1/NFPA54-Latest Edition "National Fuel Gas Code" or 2) CSA B149.1 "Natural Gas and Propane Installation Code" or in Canada reference the B149.1 latest edition and with the requirement of the local utility or other authorities having jurisdiction. Such applicable requirements take precedence over the general instructions contained herein. All electrical wiring is to be done in accordance with the local codes, or in the absence of local codes, with: 1) The National Electrical Code ANSI/NFPA No. 70-latest Edition, or 2) CSA STD. C22.1 "Canadian Electrical Code - Part 1". This appliance must be electrically grounded in accordance with these codes.

1.E Unit Overviews

The next 3 pages give a visual reference to the basic component locations of the unit.

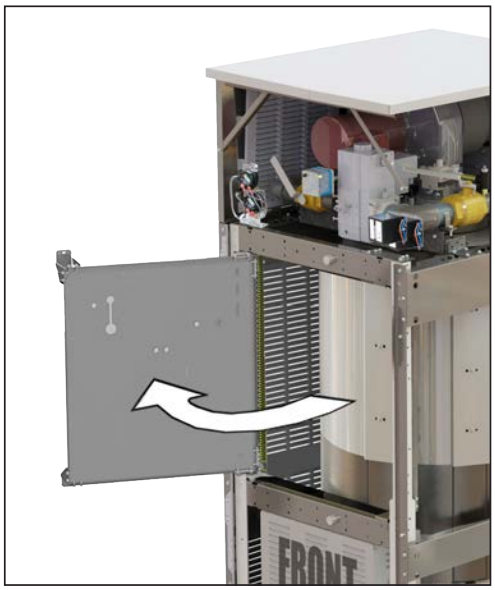

On all models, the Control Panel hinges forward for easy access to wiring and to the heat exchanger.

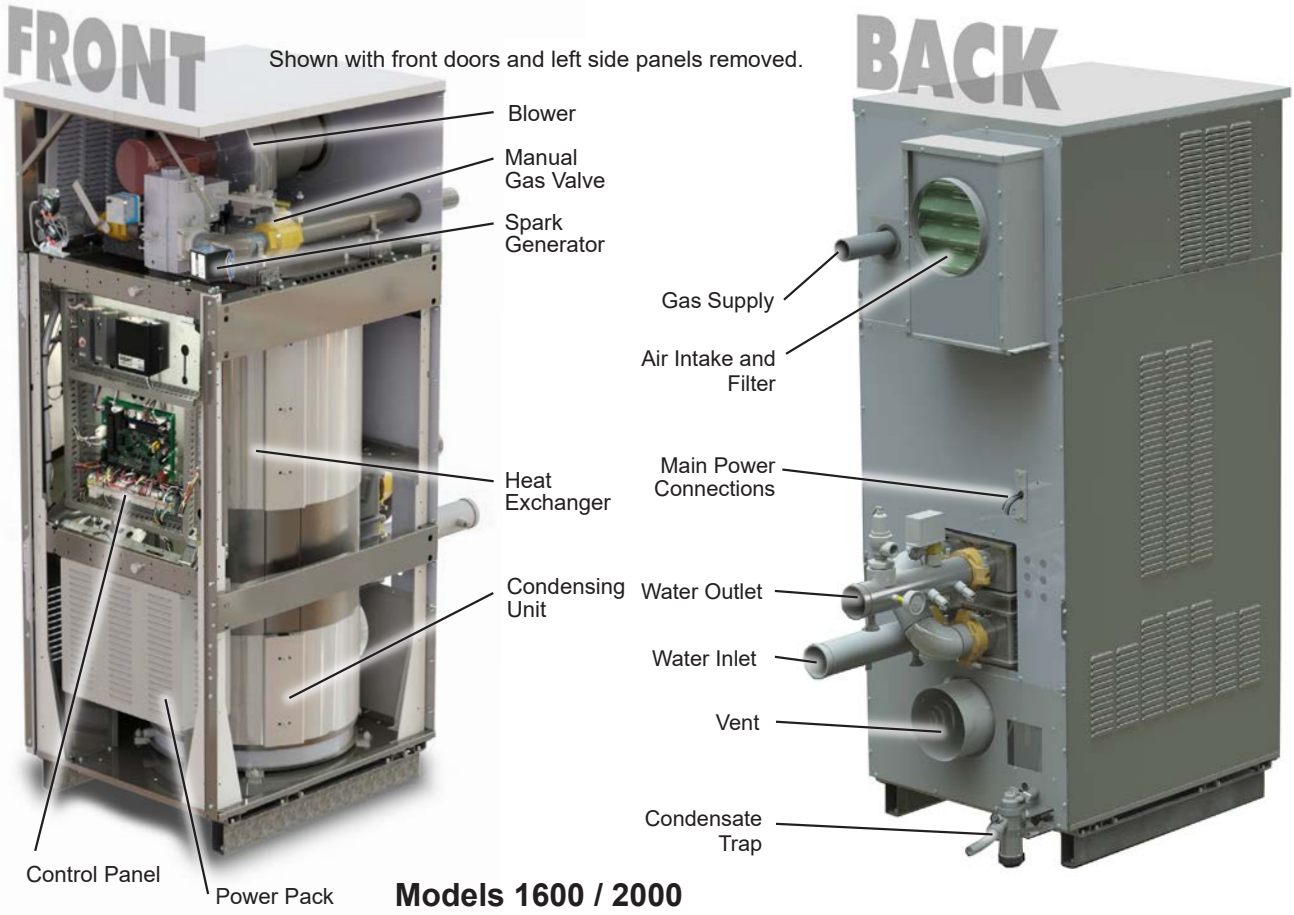

Models 1600 / 2000

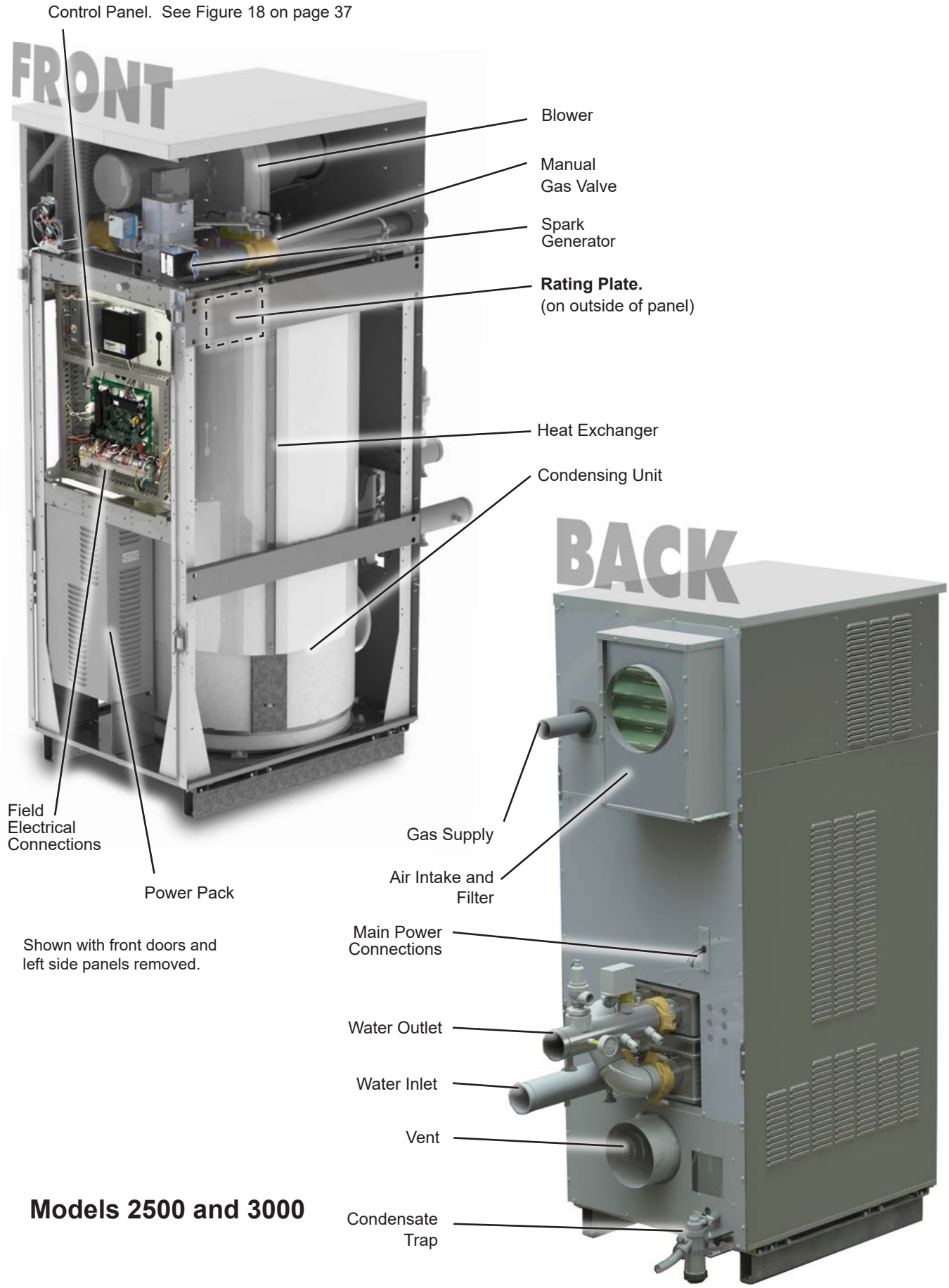

Shown with front doors and left side panels removed.

Models 2500 and 3000

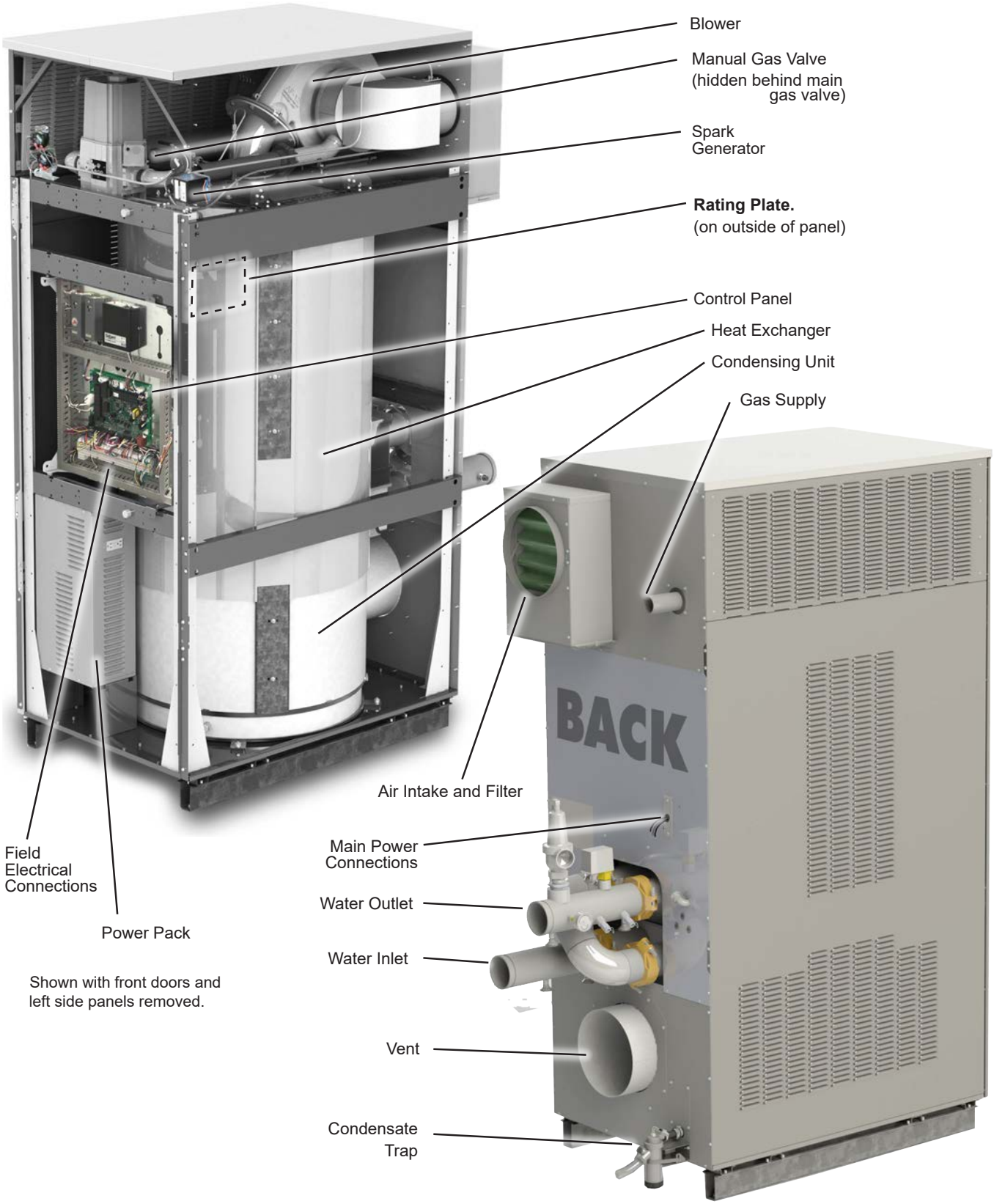

Shown with front doors and left side panels removed.

Models 3500 and 4000

1.F Gas Train Components

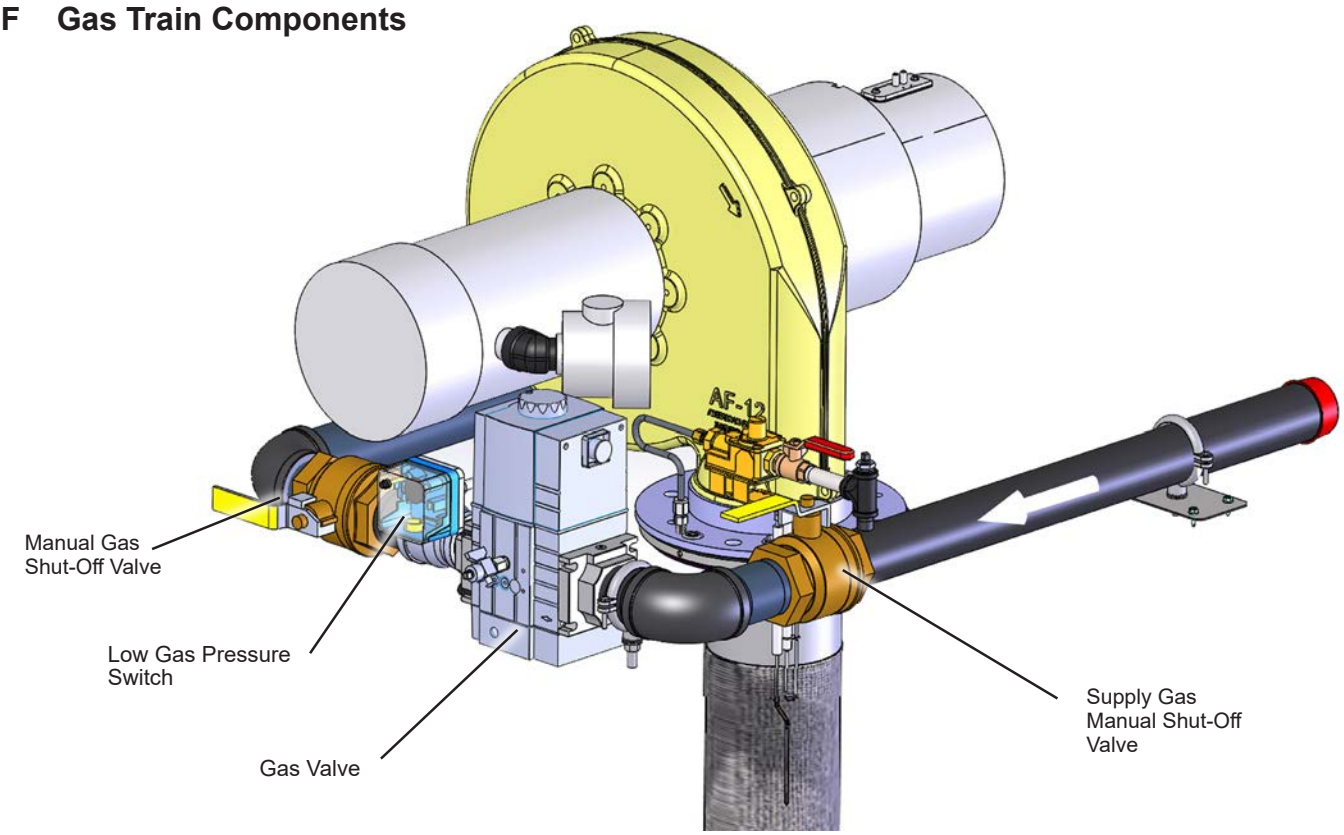

Models 1600 to 3000

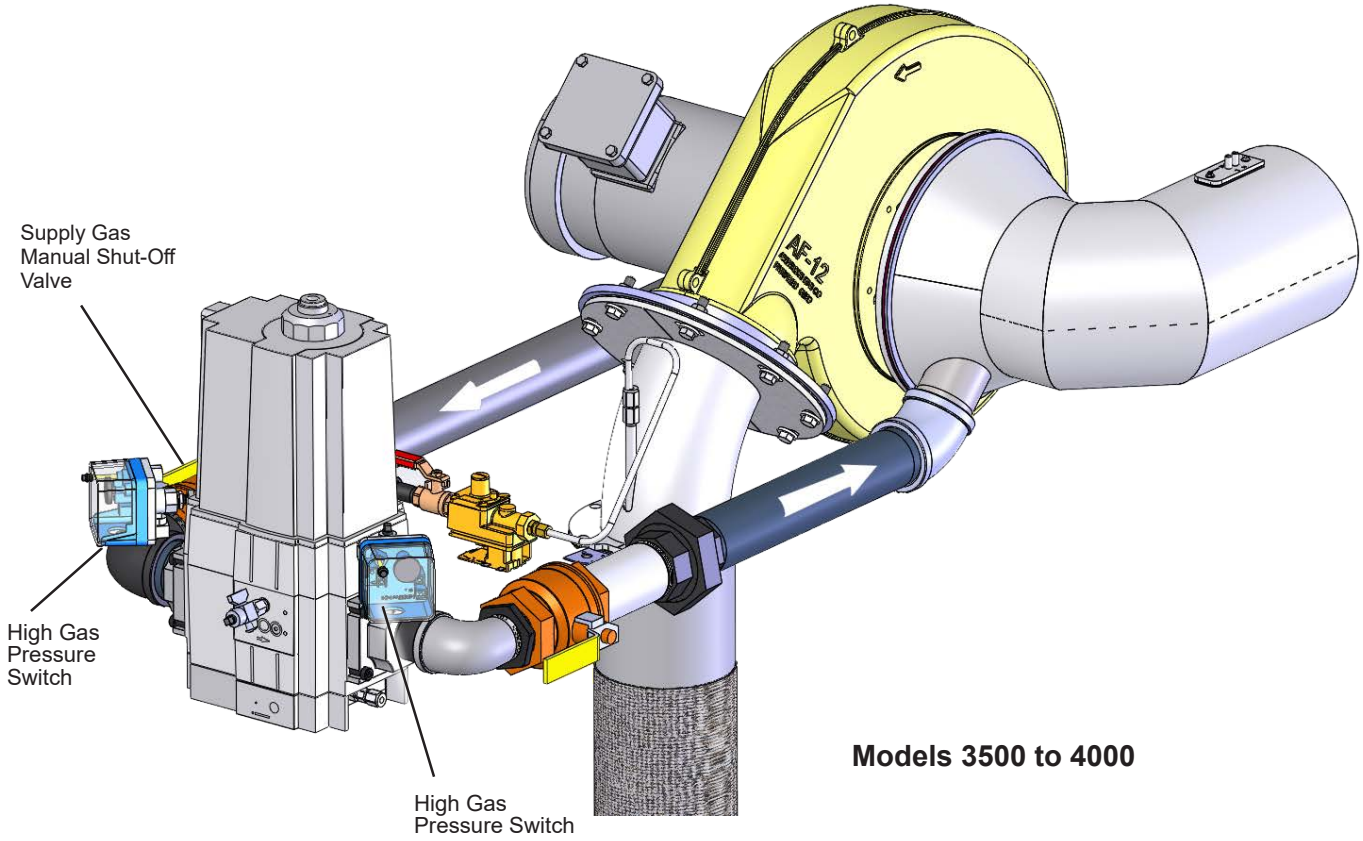

Models 3500 to 4000

1.G Dimensions

Model	A	B	C	D	E
1600	29.3 (*75*)	79.8 (*203*)	38.0 (*96*)	57.5 (*147*)	49.8 (*126*)
2000	29.3 (*75*)	79.8 (*203*)	38.0 (*96*)	57.5 (*147*)	49.8 (*126*)
2500	30.8 (*78*)	87.0 (*221*)	41.5 (*105*)	60.5 (*154*)	60.8 (*154*)
3000	30.8 (*78*)	87.0 (*221*)	41.5 (*105*)	60.5 (*154*)	60.8 (*154*)
3500	34.5 (*88*)	97.0 (*246*)	52.0 (*133*)	70.0 (*178*)	60.8 (*154*)
4000	34.5 (*88*)	97.0 (*246*)	52.0 (*133*)	70.0 (*178*)	60.8 (*154*)

inches (cm)

Model	G	H	J	K	N	P
1600	60.8 (*154*)	2.6 (*7*)	8.4 (*21*)	67.4 (*171*)	30.4 (*77*)	16.0 (*41*)
2000	60.8 (*154*)	2.6 (*7*)	8.4 (*21*)	67.4 (*171*)	30.4 (*77*)	16.0 (*41*)
2500	71.0 (*180*)	4.0 (*10*)	9.8 (*25*)	76.4 (*194*)	34.5 (*88*)	17.7 (*45*)
3000	71.0 (*180*)	4.0 (*10*)	9.8 (*25*)	76.8 (*195*)	34.5 (*88*)	17.7 (*45*)
3500	80.8 (*205*)	28.8 (73)	26.5 (67)	85.6 (*217*)	40.0 (*102*)	21.6 (*55*)
4000	80.8 (*205*)	28.8 (73)	26.5 (67)	85.6 (*217*)	40.0 (*102*)	21.6 (*55*)

inches (cm)

Model	Q	R	S	T	U
1600	23.0 (*58*)	10.2 (*26*)	14.0 (*36*)	13.0 (*33*)	6.3 (*16*)
2000	23.0 (*58*)	10.2 (*26*)	14.0 (*36*)	13.0 (*33*)	6.3 (*16*)
2500	27.2 (*69*)	11.8 (*30*)	18.3 (*46*)	14.8 (*38*)	6.0 (*15*)
3000	27.2 (*69*)	11.8 (*30*)	18.3 (*46*)	14.8 (*38*)	6.0 (*15*)
3500	30.7 (*78*)	13.0 (*33*)	16.0 (*41*)	17.4 (*44*)	6.7 (*17*)
4000	30.7 (*78*)	13.0 (*33*)	16.0 (*41*)	17.4 (*44*)	6.7 (*17*)

inches (cm)

Model	Vent Collar Diameter	Air Inlet Collar Diameter	'Knockdown' Height	Water Connection	Gas Connection	Condensate Line
1600	6 (*15*)	6 (*15*)	60.8 (*154*)	3" groove lock (opt. flange)	2" NPT	1"
2000	8 (*20*)	8 (*20*)	60.8 (*154*)	3" groove lock (opt. flange)	2" NPT	1"
2500	8 (*20*)	8 (*20*)	71.0 (*180*)	3" groove lock (opt. flange)	2" NPT	1"
3000	10 (*25*)	10 (*25*)	71.0 (*180*)	3" groove lock (opt. flange)	2" NPT	1"
3500	10 (*25*)	10 (*25*)	80.8 (*205*)	4" groove lock (opt. flange)	2" NPT	1"
4000	12 (*30*)	12 (*30*)	80.8 (*205*)	4" groove lock (opt. flange)	2" NPT	1"

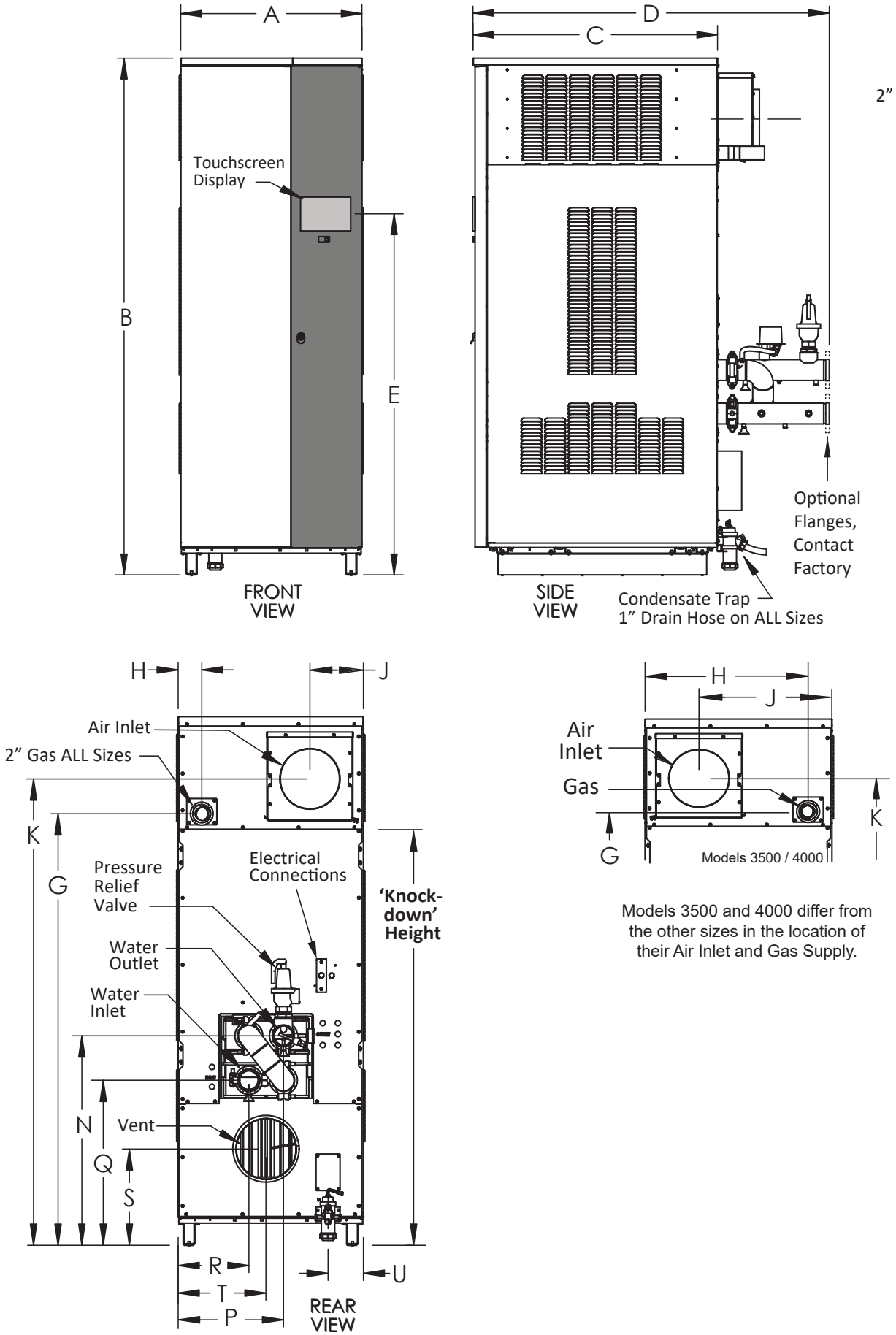

Figure 1. Dimensions

1.H Unpacking

This unit is shipped in a single crate. Carefully disassemble the crate and inspect the unit for any damage during shipping. Included in the crate and yet outside of the unit is the 'Installation Kit' box.

Inspect the contents of the the Installation Kit box, making sure that all parts are included and not damaged.

1. Gromet, Nylon.
2. Box containing Outdoor Sensor
3. Box containing System Sensor
4. Tank Sensor
5. Spring Clip (used to hold tank sensor in sensor well)
6. Condensate Trap Assembly (some assembly required) and document 4312 Condensate Trap Assembly Instructions.
7. Installation Instructions for Sensors.

NOTE: A condensate neutralizer is NOT included.

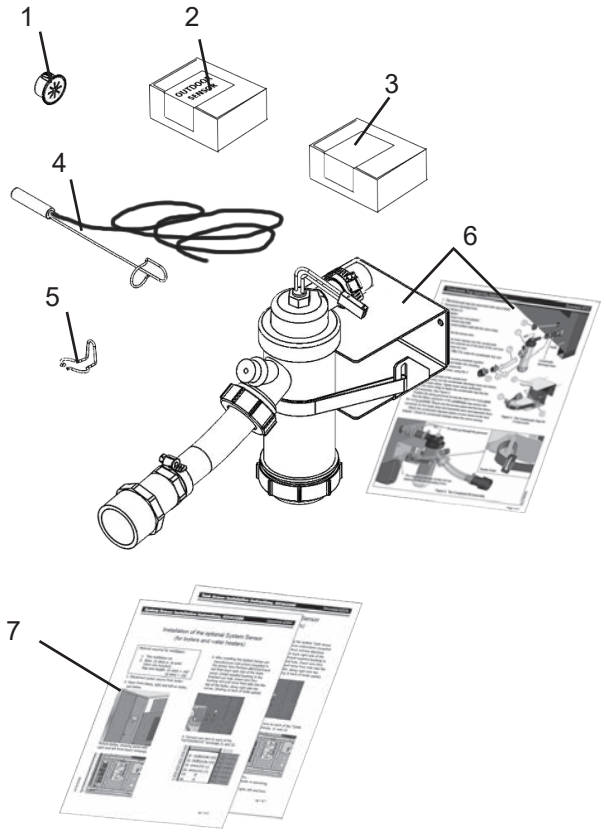

Figure 2. Installation Kit

1.I Locating the unit

This unit may be installed indoors or outdoors. If installing outdoors in a location that may experience freezing temperatures, precautions must be taken to prevent water in the heat exchanger and condensate inside and outside of the boiler from freezing. Damage due to freezing water or condensate is not covered by the warranty.

Choose a location for the unit which allows clearances on all sides for maintenance and inspection. See Table 2. Always install the unit on a firm, level surface. It is recommended that the unit is installed on a raised 4" pad so that there is elevation for a condensate neutralizer kit (not included with unit).

The unit should not be located in an area where leakage of any connections will result in damage to the area adjacent to the unit, or to lower floors of the structure.

When this type of location is not available, install a suitable drain pan, adequately drained, under the unit.

This unit is design-certified by CSA-International for installation on combustible flooring; in basements; in utility rooms or alcoves**. Boilers must never be installed on carpeting.** The location for the unit should be chosen with regard to the vent pipe lengths and external plumbing.

The unit shall be installed such that the gas ignition system components are protected from water (dripping, spraying, rain, etc.) during operation and service (circulator replacement, control replacement, etc.).

When vented vertically, the unit must be located as close as practical to the vertical section of the vent. If the vent terminal and/or combustion air terminal terminate through a wall, and there is potential for snow accumulation in the local area, both terminals should be installed at an appropriate level above grade or the maximum expected snow line.

The dimensions and requirements that are shown in Table 1 must be met when choosing the location for the unit.

Ensure the location takes into account the maximum allowable vent length shown in SECTION 2 of this manual.

NOTE : The unit shall be installed such that the gas ignition system components are protected from water (dripping, spraying, rain, etc.) during operation and service (circulator replacement, control replacement, etc.).

1.J Clearances

	Clearance to Combustibles		Suggested Service Clearance	
	inches	*cm*	inches	*cm*
Front	18	*46*	24	*61*
Back	11	*28*	24	*61*
Left	4	*10*	8	*20*
Right	4	*10*	8	*20*
Top	1	*2.5*	See Table 2	

Table 1. Clearances

1600/2000		2500/3000		3500/4000	
inches	*cm*	inches	*cm*	inches	*cm*
12	*30*	15	*38*	24	*61*

Table 2. Suggested Top Service Clearances

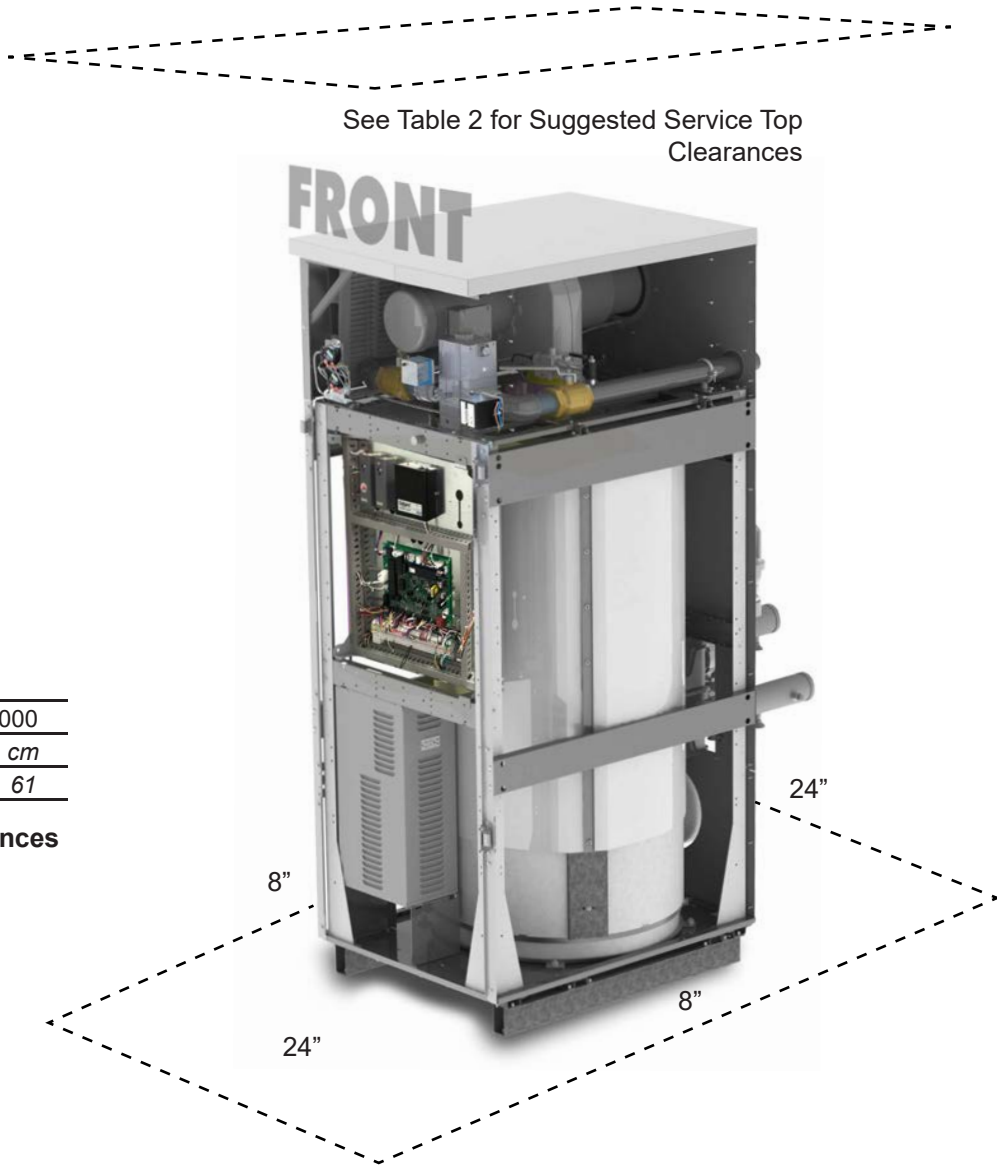

Figure 3. Suggested Service Clearances

SECTION 2 Venting and Combustion Air

2.A General Venting Information

⚠ WARNING

Selection of improper vent materials for installations that are installed in closets, or will be operated in high ambient temperature levels, may Lead to property damage, personal injury, or death.

⚠ WARNING

Failure to use the appropriate vent material, installation techniques, or glues and sealants could Lead to vent failure causing property damage, personal injury or death.

⚠ WARNING

Use of cellular core PVC (ASTM F891), cellular core CPVC, or Radel® (polyphenolsulfone) in non-metallic venting systems is prohibited and that covering non-metallic vent pipe and fittings with thermal insulation is prohibited.

⚠ WARNING

All venting must be installed according to this manual and any other applicable local codes, including but not limited to, ANSI Z223.1/NFPA 54, CSA B149.1, CSAB149.2 and ULC S636. Failure to follow this manual and applicable codes may Lead to property damage, severe injury, or death.

If the system temperatures are unknown at the time of installation, class IIC or higher venting material is recommended.

This unit is certified to vent as a Category II (negative pressure condensing) or Category IV (positive pressure condensing) appliance. It may be installed with vent materials meeting the standards listed in Table 5. The vent can terminate through the roof, or through an outside wall.

All installations must be done following the vent supplier's recommended installation techniques. If these are not available, refer to the Manufacturer recommendations for the material used.

2.B Vent and Air Pipe Material

This unit requires a special venting system. Refer to venting supplier's instructions for complete parts list and method of installation. The manufacturers and product lines listed in Table 3 and Table 4 have been tested and authorized to safely operate with this equipment. Suppliers of stainless steel and polypropylene venting that are not listed on these tables are not permitted for use with this appliance.

Do not mix venting suppliers and models in venting systems. Failure to comply could result in personal injury, property damage, or death.

Installations must comply with applicable national, state and local codes.

2.B.1 Venting Requirements Unique to Canada

These high efficiency boilers and water heaters are Vent Category II and IV units. Per the requirements of CAN/CSA-B149.1, only BH vent systems can be connected to these units and such vent systems, either ULC S636 certified stainless steel or other ULC S636 certified BH vent (eg. plastics) must be installed per the vent manufacturer's certified installation instructions.

It is the responsibility of the appropriately licensed technician installing this unit to use ULC S636 certified vent material consistent with the requirements as described in the Venting and Combustion Air section.

Class I venting systems are suitable for gas-fired units producing flue gas temperature of more than 135°C, but not more than 245°C.

Class II venting systems are suitable for gas-fired units producing flue gas temperatures of 135°C or less.

Class II venting systems are further classified into four temperature ratings as follows:

A Up to and including 65°C / 149°F

B Up to and including 90°C / 194°F

C Up to and including 110°C / 230°F and

D Up to and including 135°C / 275°F

2.B.1.a Flue Gas Sampling Port -

It is also the responsibility of the installer to ensure that a flue gas sampling port is installed in the vent system. This flue gas sampling port must be installed near the flue connection of the unit: within 2 feet of the flue connection. There is no flue gas sampling port internal to the unit, so one must be installed in the vent system

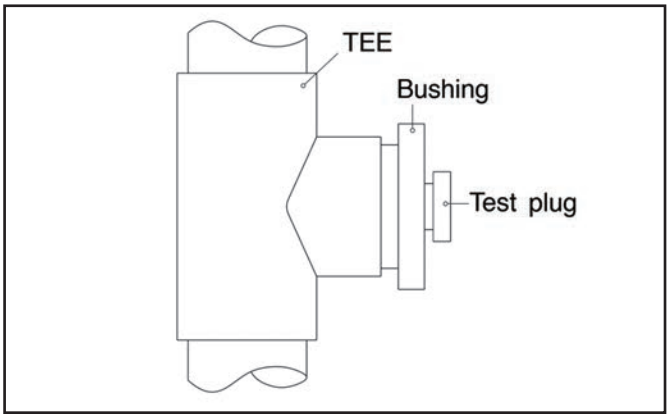

Figure 4. Test Port

external to the unit. A flue gas sampling port available as a component of the ULC S636 certified vent system is preferred. However, if one is not available with the certified vent system, manufacturer suggests using a tee with the branch connection sized to allow for insertion of a flue gas analyzer probe. The branch connection must be resealable with a cap or other means to ensure the vent system remains sealed. (See Figure 4)

Consideration must be given to the placement and orientation of the flue gas sampling port to ensure that condensate is free to flow back into the unit and not collect anywhere in the vent system - including in the flue gas sampling port.

2.B.1.b Exhaust Vent Terminal -

An exhaust vent terminal must be installed. If an exhaust vent terminal is not available with the certified vent system, the manufacturer suggests the use of a coupler fitting from the certified vent system into which the vent terminal screen can be installed. Be sure to install and terminate both vent and combustion air pipes per the instructions in this section.

Manufacturer Model Numbers (abbreviated)

Example Components	Selkirk	DuraVent	NovaFlex
	Trade Name / Model		
	Safe-T Vent EZ Seal	**FasNSeal**	**Z Flex**
90° Elbow	9x14	FSELB90xx	2SVEExx90
Pipe	9x07	FSVLxxxx	2SVEPxxxx
Boiler Adapter	9xx01MAD	N/A	2SVSAFNSxx
Horizontal Termination (bird screen)	9x92	FSBSx	2SVSTPXxx
Vertical Termination (rain cap)	5X00CI	FSRCx	2SVSRCxx
Inlet Air Termination	9xTERM	FSAIHXX*	2SVSTEXxx90
		FSA-xxFNSM-xPVCF	
Adapter SS to PP		FSAAUx-xPP	2ZDCPVCx**
		*4", 6" & 7" only	**up to 6"

Table 3. Allowable Single Wall Stainless Steel Vent Suppliers and Part Numbers

Manufacturer Model Numbers (abbreviated)

	CentroTherm	DuraVent	NovaFlex
Example Components	Trade Name / Model		
	InnoFlue	**PolyPro**	**Z-Dens**
Single Wall Pipe	ISVLxxxx	xPPS-x	ZDPx
Elbow	ISELxxxx	xPPS-E90L	2ZDEx87
PVC Adapter	ISSAxxxx	810007030-FSA-06M-6PPF 810007031-FSA-08M-8PPF (6" & 8" Only)	2ZDAFSxx 6" & 8" Only
Horizontal Termination (bird screen)	IASPPxx (2" - 4") IASSSxx (5" - 12")	xPPS-BG (2" - 6")	2ZDESx
Vertical Termination	IASPPxx (2" - 4") IASSSxx (5" - 12")	xPPS-VKL (<5") xPPS-VTML (5"-8")	2ZDESx
Air Inlet			2ZDESx

Table 4. Allowable Polypropylene Vent Manufacturers / Trade Names

Installation Standards		
Material	**United States**	**Canada**
Stainless steel	UL 1738	Venting must be ULC S636 certified for use as venting material. The venting material class must be chosen based upon the intended application of the unit and must be installed according to the maximum flue gas temperature and the vent manufacturer's instructions.
CPVC, sch 40	ANSI/ASTM F441	
Polypropylene	ULC S636 Class 2C	

Table 5. Required Exhaust Vent Material

	Model 1600	Model 2000	Model 2500	Model 3000	Model 3500	Model 4000
Horizontal vent terminal for stainless steel	D2012004	D2012001	D2012001	D2012002	D2012003	D2012003
Screen for horizontal CPVC vent	CA012104	CA012101	CA012101	CA012102	CA012103	CA012103
Screen for vertical stainless steel vent	D2012304	D2012301	D2012301	D2012302	D2012303	D2012303
Screen for vertical CPVC vent	CA012504	CA012501	CA012501	CA012502	CA012503	CA012503

Table 6. Exhaust Vent Accessories

Material	United States	Canada
ABS	ANSI/ASTM D1527	The air pipe material must be chosen based upon the intended application of the boiler or water heater and must be installed according to the vent manufacturer's installation instructions.
PVC, sch. 40	ANSI/ASTM D1785 or D2665	
CPVC, sch. 40	ANSI/ASTM F441	
Single wall galv. steel	26 gauge	
Polypropylene	ULC S636 Class 2C	

Table 7. Required Combustion Air Pipe Material

	Model 1600	Model 2000	Model 2500	Model 3000	Model 3500	Model 4000
Screen for horizontal galvanized air pipe	D2012104	D2012101	D2012101	D2012102	D2012103	D2012103
Screen for horizontal PVC air pipe	CA012004	CA012001	CA012001	CA012002	CA012003	CA012003
Screen for horizontal polypropylene air pipe	CA012204	CA012201	CA012201	CA012202	CA012203	CA012203
Screen for vertical galvanized air pipe	D2012204	D2012201	D2012201	D2012202	D2012203	D2012203
Screen for vertical PVC air pipe	CA012404	CA012401	CA012401	CA012402	CA012403	CA012403
Screen for vertical polypropylene air pipe	CA012604	CA012601	CA012601	CA012602	CA012603	CA012603

Table 8. Ducted Air Accessories

2.C Vent and Air Pipe Sizing

This unit is certified to vent as a Category II or Category IV appliance. Because Category II vent is non-positive, the vent size may not be the same as the positive pressure Category IV vent, even when the unit is the same size. Be sure to follow the instructions in this manual, based on the type of venting in your installation.

The venting must be correct to allow the condensate to run back to the unit to drain. Route the vent pipe to the heater as directly as possible. Seal all joints. Provide adequate hangers as required in the venting system manufacturer's Installation Instructions, or at least every 4 feet.

The unit must not support the weight of the vent pipe. **The maximum equivalent pipe length allowed is 100 feet (30m).** Each elbow is considered to be 5 feet (1.5m). The manufacturer offers accessory kits to use with horizontal and vertical exhaust vent systems, as shown in Table 6

NOTE: For Category II and IV boilers, the horizontal runs must be sloping upwards not less than 1/4 inch per foot (21 mm/m) from the boiler to the vent terminal, so as to prevent accumulation of condensate and, where necessary, have the means provided for drainage of condensate.

ATTENTION: Pour la catégorie II & IV, les chaudières ont horizontal en pente vers le haut au moins 1/4 de pouce par pied (21 mm/m) à partir de la chaudière pour l'évent borne; être installé de façon à éviter l'accumulation de condensats; et, le cas échéant, ont des moyens prévus pour l'évacuation des condensats.

2.C.1 Category IV Vent Sizes

Positive pressure vent systems may be either horizontally or vertically vented. The vent pipe used must be suitable for positive pressure, per the requirements shown in Section 2.B. Table 9 shows the pipe size and allowable maximum equivalent feet of piping allowed for both air and vent in a Category IV system.

The forced draft combustion air blower in the unit has sufficient power to vent properly when the guidelines in Table 9 are followed.

INTAKE / EXHAUST			
		Max Equivalent	
Size	**Diameter**	**Ft**	**M**
1600	6”	**100**	*30*
2000 / 2500	8”	**100**	*30*
3000 / 3500	10”	**100**	*30*
4000	12”	**100**	*30*
Combustion Intake and Vent must be the same size.			
Installations in the U.S. require exhaust vent pipe that is CPVC complying with ANSI/ASTM D1785 F441, poly-propylene complying with ULC S636, or stainless steel complying with UL1738. Installations in Canada require exhaust vent pipe that is certified to ULC S636.			
Intake (air) pipe must be PVC or CPVC that complies with ANSI/ASTM D1785 F441, ABS that complies with ANSI/ ASTM D1527, stainless steel, or galvanized material.			
To calculate max equivalent length, measure the linear feet of the pipe and add 5 feet *(1.5 m)* for each elbow used.			

Table 9. Category IV Vent/Air Pipe Diameters

⚠ WARNING

The venting must be installed with appropriate condensate traps and using only specific manufacturers, models and materials outlined in this manual. Draft must always remain between -0.1” and -0.001” at all firing rates. If pressures outside of this range are measured, consult professional venting engineer for recommendations, such as double-acting barometric dampers to avoid reduced performance or hazardous conditions.

2.C.2 Category II Vent Sizes

Non-positive pressure vent systems are generally vertically-terminated. Table 10 gives guidelines for vent and air pipe sizes, but the draft must be measured to ensure that it remains between -0.1”w.c. and -0.001”w.c. at all firing rates.

Model	Vent/Air Connector Size on Unit	Vent Pipe Size Guideline	Air Pipe Size
1600	6" (15 cm)	14" (36 cm)	6" (15 cm)
2000	8" (20 cm)	14" (36 cm)	8" (20 cm)
2500	8" (20 cm)	18" (46 cm)	8" (20 cm)
3000	10" (25 cm)	18" (46 cm)	10" (25 cm)
3500	10" (25 cm)	22" (56 cm)	10" (25 cm)
4000	12" (30 cm)	22" (56 cm)	12" (30 cm)

Table 10. Category II Vent/Air Pipe Diameters

2.C.3 Common Venting

This unit can be common vented, however, the common venting must be a professionally designed and approved system. See Document 1396.pdf ***Application Guide for Common Venting (commercial condensing***, available online. See Back Cover)

Category II and IV units are never permitted to share a vent with any Category 1 units.

2.C.4 Common Vent Test

NOTE: This section does not describe a method for common venting this unit. It describes what must be done when an unit is removed from a common vent system. This category IV unit requires special vent systems and fans for common vent. Contact the factory or your factory representative if you have questions about common venting this category IV unit.

When an existing boiler is removed from a common venting system, the common venting system is likely to be too large for proper venting of the units remaining connected to it.

At the time of removal of an existing boiler, the following steps shall be followed with each unit remaining connected to the common venting system placed in operation, while the other units remaining connected to the common venting system are not in operation.

1. Seal any unused openings in the common venting system.
2. Visually inspect the venting system for proper size and horizontal pitch and determine there is no blockage or restriction, leakage, corrosion or other deficiencies which could cause an unsafe condition.
3. Insofar as is practical, close all building doors and windows and all doors between the space in which the units remaining connected to the common venting system are located and other spaces of the building. Turn on any clothes dryers and any unit not connected to the common venting system. Turn on any exhaust fans, such as range hoods and bathroom exhausts, so they will operate at maximum speed. Do not operate a summer exhaust fan. Close fireplace dampers.
4. Place in operation the unit being inspected. Follow the startup instructions. Adjust thermostat so unit will operate continuously.
5. Test for spillage at the draft hood relief opening after five minutes of main burner operation. Use the flame of a match or candle, or smoke from a cigarette, cigar or pipe.
6. After it has been determined that each unit remaining connected to the common venting system properly vents when tested as outlined above, return the doors, windows, exhaust fans, fireplace dampers and any other gas burning unit to their previous conditions of use.
7. Any improper operation of the common venting system should be corrected so the installation conforms with the National Fuel Gas Code, ANSI Z223.1/NFPA 54 and/or CAN/CSA B149.1, National Gas and Propane Installation Code. When resizing any portion of the common venting system, the common venting system should be resized to approach the minimum size as determined using the appropriate tables in Appendix F in the National Fuel Gas Code, ANSI Z223.1 NFPA 54 and/or CAN/CSA B149.1, National Gas and Propane Installation Code.

Au moment du retrait d'une chaudiére existante, les mesures suivantes doivent être prises pour chaque appareil toujurs raccordé au systéme d'évacuation commun et qui fonctionne alors que d'autres appareils toujours raccordés au système d'évacuation ne fonctionnent pas:

Au moment de la sortie d'une chaudière existante, la procédure suivante doit être suivie avec chaque appareil reste connecté au système de ventilation communs placés dans l'exploitation, tandis que les autres appareils reste connecté au système de ventilation communs ne sont pas en fonctionnement.

1. Sceller toutes les ouvertures non utilisées du système d'évacuation.
2. Inspecter de facon visuelle le système d'évacuation pour déterminer la grosseur et l'inclinaison horizontale qui conviennent et s'assurer que le système est exempt d'obstruction, d'étranglement, de fuite, de corrosion et autres défaillances qui pourraient présenter des risques.
3. Dans la mesure du possible, fermer toutes les portes et les fenêtres du bâtiment et toutes les portes entre l'espace où les appareils toujours raccordés au système d'évacuation sont installés et les autres espaces du bâtiment. Mettre en march les sécheuses, tous les appareils non raccordés au système d'évacuation commun et tous les ventilateurs d'extraction comme les hottes de cuisinière et les ventilateurs des salles de bain. S'assurer que ces ventilateurs fonctionnent à la vitesse maximale. Ne pas faire fonctionner les ventilateurs d'été. Fermer les registres des cheminées.
4. Mettre l'appareil inspecté en marche. Suivre les instructions d'allumage. Régler le thermostat de facon que l'appareil fonctionne de facon continue.
5. Faire fonctionner le brûleur principal pendant 5 min ensuite, déterminer si le coup-tirage déborde à l'ouverture de décharge. Utiliser la flamme d'une allumette ou d' une chandelle ou la fumée d' une cigarette, d'un cigare ou d'une pipe.
6. Une fois qu'il a été détermineé, selon la méthode indiquée ci-dessus, que chaque appareil raccordé au système d'évacuation est mis à l'air libre de facon adéquate. Remettre les portes et les fenêtres, les vientilateurs, les registre de cheminées et les appareils au gaz àleur position originale.
7, Tout mauvais fonctionnement du système d'évacuation commun devrait être corrigé de facon que l'installation soit conforme au National Fuel Gas Code, ANSI Z223.1/NFPA 54 et (ou) aux codes d'installation CAN/CSA-B149.1. Si la grosseur d'une section du système d'évacuation doit être modifié pour respecter les valeurs minimales des tableaux pertinents de l'appendice F du National Fuel Gas Code, ANSI Z223.1/NFPA 54 et (ou) aux codes d'installation CAN/CSA-B149.1.

2.C.5 Combustion Air

Boilers and water heaters must have provisions for combustion and ventilation air in accordance with the applicable requirements for Combustion Air Supply and Ventilation in the National Fuel Gas Code, ANSI Z223 1; or in Canada, the Natural Gas and Propane Installation Code, CSA B149.1. All applicable provisions of local building codes must also be adhered to.

This unit can take combustion air from the space in which it is installed, or the combustion air can be ducted directly to the unit. Combustion and Ventilation air must be provided in either case.

2.C.5.a Combustion Air From Room

In the United States, the most common requirements specify that the space shall communicate with the outdoors in accordance with Method 1 or 2. (See the following descriptions.) Where ducts are used, they shall be of the same cross-sectional area as the free area of the openings to which they connect.

Method 1: Two permanent openings, one commencing within 12” (30 cm) of the top and one commencing within 12” (30 cm) of the bottom, of the enclosure shall be provided. The openings shall communicate directly, or by ducts, with the outdoors or spaces that freely communicate with the outdoors. When directly communicating with the outdoors, or when communicating to the outdoors through vertical ducts, each opening shall have a minimum free area of 1 square inch per 4000 Btu/hr (550 square mm/kW) of total input rating of all equipment in the enclosure. When communicating to the outdoors through horizontal ducts, each opening shall have a minimum free area of not less than 1 square inch per 2000 Btu/hr (1100 square mm/kW) of total input rating of all equipment in the enclosure.

Method 2: One permanent opening, commencing within 12” (300 mm) of the top of the enclosure, shall be permitted. The opening shall directly communicate with the outdoors or shall communicate through a vertical or horizontal duct to the outdoors or spaces that directly communicate with the outdoors and shall have a minimum free area of 1 square inch per 3000 Btu/hr (734 square mm/kW) of the total input rating of all equipment located in the enclosure. This opening must not be less than the sum of the areas of all vent connectors in the confined space.

Other methods of introducing combustion and ventilation air are acceptable, providing they conform to the requirements in the applicable codes listed above.

In Canada, consult local building and safety codes or, in absence of such requirements, follow CAN/CSA B149.

2.C.5.b Ducted Combustion Air

The combustion air can be taken through the wall, or through the roof. The manufacturer offers accessories to use with ducted air systems, as shown in Table 8.

See Table 7 to select the appropriate diameter air pipe. When taken from the roof, a field-supplied rain cap or an elbow arrangement must be used to prevent entry of rain water. (See Figure 7).

Use ABS, PVC, CPVC, polypropylene, stainless steel, or galvanized pipe for the combustion air intake (See Table 7). The intake must be sized per Table 9. Route the intake to the boiler as directly as possible. Seal all joints. Provide adequate hangers. The unit must not support the weight of the combustion air intake pipe. The maximum equivalent pipe length allowed is 100 feet (30 m).
Each elbow is considered to be 5 feet (1.5m)

When using polypropylene or stainless steel materials in horizontal duct configurations, a single elbow must be installed on the end of the air inlet to act as an outdoor terminal. In vertical duct applications, two elbows must be installed on the end of the inlet to act as a vent terminal. When elbows are use as terminals, appropriate screens must be installed to prevent blockage.
The elbow(s) required for termination are not included in the kits shown in Table 8

The connection for the intake air pipe is on the back panel.

In addition to air needed for combustion, air shall also be supplied for ventilation, including air required for comfort and proper working conditions for personnel. Refer to the applicable codes.

2.D Locating the Vent and Combustion Air Terminals

2.D.1 Side-wall Vent Terminal

The appropriate side-wall vent terminal must be used. The terminal must be located in accordance with ANSI Z223.1/NFPA 54 and applicable local codes. In Canada, the installation must be in accordance with CSA B149.1 or .2 and local applicable codes.

Consider the following when installing the terminal:

1. Figure 6 on page 20 shows the requirements for mechanical vent terminal clearances for the U.S. and Canada.
2. Vent terminals for condensing units or units with condensing vents are **not** permitted to terminate above a public walkway, or over an area where condensate or vapor could create a nuisance or hazard.
3. Locate the vent terminal so that vent gases cannot be drawn into air conditioning system inlets.
4. Locate the vent terminal so that vent gases cannot enter the building through doors, windows, gravity inlets or other openings. Whenever possible, avoid locations under windows or near doors.
5. **Locate the vent terminal so that it cannot be blocked by snow. The installer may determine that a vent terminal must be higher than the minimum shown in codes, depending upon local conditions.**
6. Locate the terminal so the vent exhaust does not settle on building surfaces or other nearby objects. Vent exhaust bi-products may damage surfaces or objects.
7. If the boiler or water heater uses ducted combustion air from an intake terminal located on the same wall, see See Figure 6 on page 20 for proper spacing and orientation.

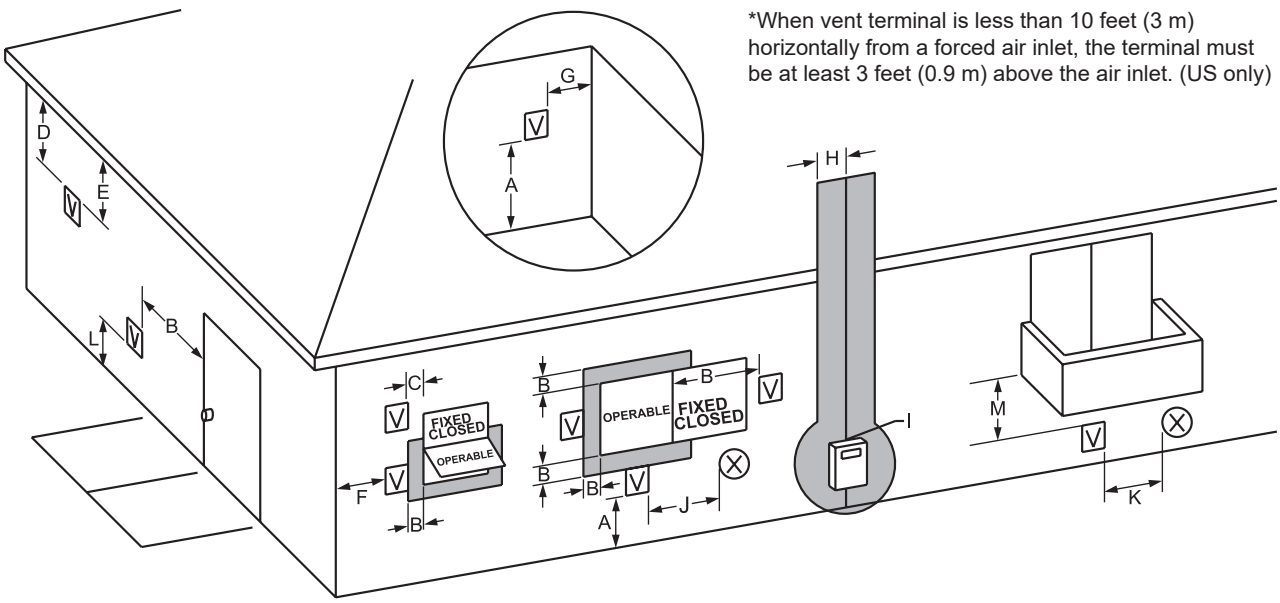

V VENT TERMINAL X AIR SUPPLY INLET AREA WHERE TERMINAL IS NOT PERMITTED

		U.S. Installations (see note 1)	Canadian Installations (see note 2)
A=	Clearance above grade, veranda, porch, deck, or balcony	12 inches (30 cm) See note 6	12 inches (30 cm) See note 6
B=	Clearance to window or door that may be opened	Direct vent only: 12 inches (30 cm); Other than Direct vent: 4 ft (1.2m) below or to side of opening; 1 ft (30 cm) above opening	36 inches (91 cm)
C=	Clearance to permanently closed window	See note 4	See note 5
D=	Vertical clearance to ventilated soffit located above the terminal within a horizontal distance of 2 feet (61 cm) from the center line of the terminal	See note 4	See note 5
E=	Clearance to unventilated soffit	See note 4	See note 5
F=	Clearance to outside corner	See note 4	See note 5
G=	Clearance to inside corner	See note 4	See note 5
H=	Clearance to each side of center line extended above meter/regulator assembly	See note 4	3 feet (91 cm) within a height 15 feet above the meter/regulator assembly
I=	Clearance to service regulator vent outlet	See note 4	3 feet (91 cm)
J=	Clearance to non-mechanical air supply inlet to building or the combustion air inlet to any other unit	Direct vent only: 36” (91cm) Other than Direct vent: 4 ft (1.2m) below or to side of opening; 1 ft (30 cm) above opening	36 inches (91 cm)
K=	Clearance to a mechanical air supply inlet	3 feet (91 cm) above if within 10 feet (3 m) horizontally	6 feet (1.83 m)
L=	Clearance above paved sidewalk or paved driveway located on public property	Vent termination not allowed in this location for category IV units.	7 ft (2.1 m) See note 5
M=	Clearance under veranda, porch, deck, or balcony	See note 4	12 inches (30 cm) See note 5

Notes:

1. In accordance with the current ANSI Z223.1 / NFPA 54 National Fuel Gas Code.
2. In accordance with the current CAN/CSA-B149 Installation Codes.
3. Permitted only if veranda, porch, deck, or balcony is fully open on a minimum of two sides beneath the floor.
4. For clearances not specified in ANSI Z223.1 / NFPA 54, clearance is in accordance with local installation codes and the requirements of the gas supplier.
5. For clearances not specified in CAN/CSA-B149, clearance is in accordance with local installation codes and the requirements of the gas supplier.
6. IMPORTANT: All terminals must be placed so that they remain a minimum 12” above expected snow line. Local codes may have more specific requirements, and must be consulted.

Figure 5. Combustion Air and Vent Through Side-wall.

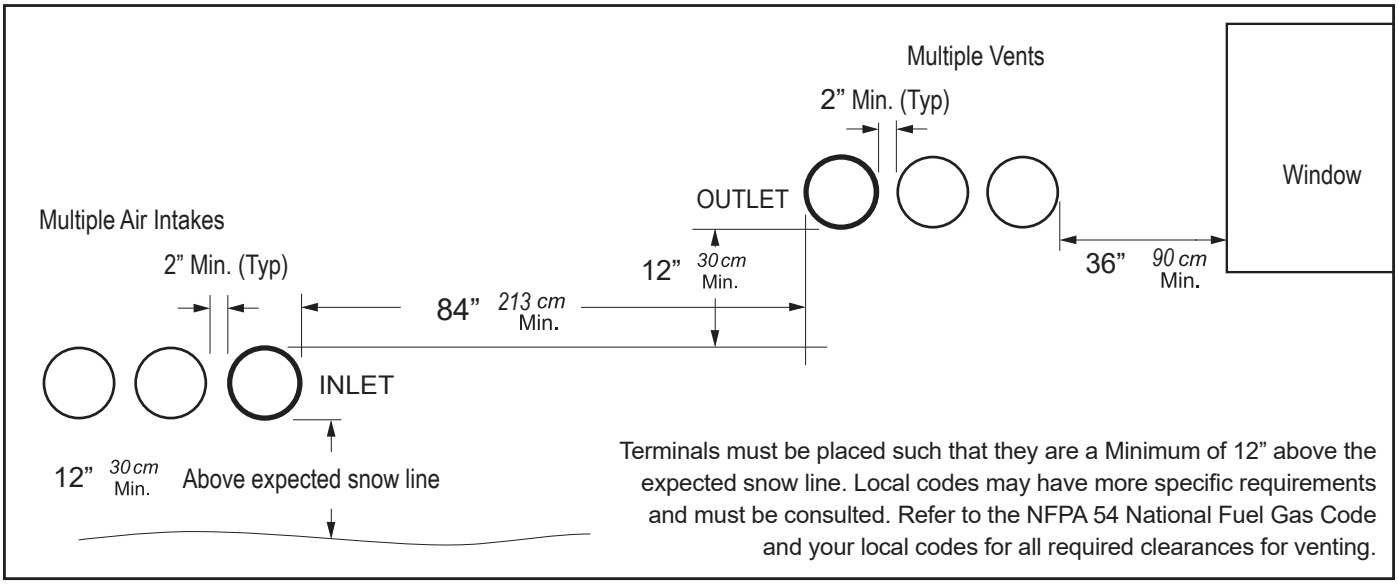

Figure 6. Sidewall Vent and Air Terminals

2.D.2 Side-wall Combustion Air Terminal

Consider the following when installing the terminal.

1. Do not locate the air inlet terminal near a source of corrosive chemical fumes (e.g., cleaning fluid, chlorine compounds, etc.).
2. Locate the terminal so that it will not be subject to damage by accident or vandalism. It must be at least 7 feet (2.1 m) above a public walkway.
3. Locate the combustion air terminal so that it cannot be blocked by snow. The National Fuel Gas Code requires that it be at least 12 inches (30 cm) above grade, but the installer may determine it should be higher, depending upon local conditions.
4. If the unit is side-wall vented to the same wall, use Figure 6 to determine the proper mounting locations.
5. Multiple vent kits should be installed such that the horizontal distance between outlet group and inlet group is 84” (213 cm). (See Figure 6)
6. The vent outlet must be at least 12” above the top of the air inlet, and must be at least 84” (213 cm) horizontally from the air inlet. (See Figure 6).

2.D.3 Vertical Vent Terminal

When the unit is vented through the roof, the vent must extend at least 3 feet (0.9 m) above the point at which it penetrates the roof. It must extend at least 2 feet (0.6 m) higher than any portion of a building within a horizontal distance of 10 feet (3.0 m), and high enough above the roof line to prevent blockage from snow. The vent terminal offered with the unit can be used in both vertical and horizontal applications. When the combustion air is taken from the roof, the combustion air must terminate at least 12” (30 cm) below the vent terminal.

2.D.4 Vertical Combustion Air Terminal

When combustion air is taken from the roof, a field-supplied rain cap or an elbow arrangement must be used to prevent entry of rain water. The opening on the end of the terminal must be at least 12” (30 cm) above the point at which it penetrates the roof, and high enough above the roof line to prevent blockage from snow. When the vent terminates on the roof, the combustion air must terminate at least 12” (30 cm) below the vent terminal.

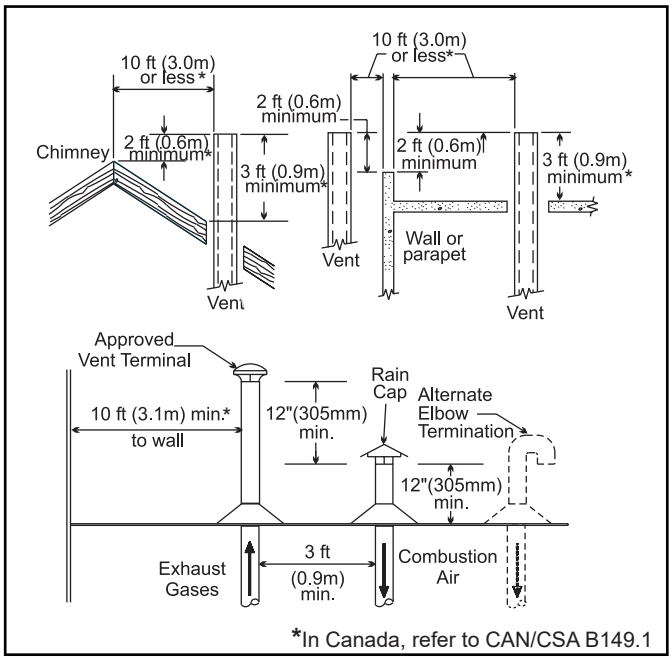

Figure 7. Combustion Air and Vent Through Roof

	Model 1600	Model 2000	Model 2500	Model 3000	Model 3500	Model 4000
Air intake screen for unit placed outdoors	CA0011904	CA011901	CA011901	CA011902	CA0011903	CA0011903
Vent terminal for unit placed outdoors	CA011804	CA011801	CA011801	CA011802	CA011803	CA011803

Table 11. Air & Vent Accessories for units placed outdoors

2.E Outdoor Installation

This unit can only be installed outdoors in areas that will will never experience freezing temperatures. Precautions must be taken to prevent water in the heat exchanger and condensate inside and outside of the boiler from freezing. Damage due to freezing water or condensate is not covered by the warranty.

For proper operation in outdoor installations, the boiler must be equipped with the inlet air and exhaust terminal kits listed in Table 11. Additional instructions are supplied with the terminal kits.

⚠ WARNING

If installing outdoors in a location that may experience freezing temperatures, provisions must be made to protect the unit from freeze damage. Manufacturer does not warranty damage caused by freezing temperatures.

2.F Installations in the Commonwealth of Massachusetts

In Massachusetts the following items are required if the side-wall exhaust vent termination is less than seven (7) feet above finished grade in the area of the venting, including but not limited to decks and porches. (From Massachusetts Rules and regulations 248 CMR 5.08.)

1. **Installation of Carbon Monoxide Detectors**

   At the time of installation of the side-wall vented gas fueled unit, the installing plumber or gasfitter shall observe that a hard wired carbon monoxide detector with an alarm battery back-up is installed on the floor level where the gas unit is to be installed. In addition, the installing plumber or gasfitter shall observe that a battery operated or hard wired carbon monoxide detector with an alarm is installed on each additional level of the dwelling, building or structure served by the side-wall horizontally vented gas fueled equipment. It shall be the responsibility of the property owner to secure the services of qualified licensed professionals for installation of hard wired carbon monoxide detectors.

   a. In the event that the side-wall horizontally vented gas fueled equipment is installed in a crawl space or an attic, the hard wired carbon monoxide with alarm and battery back-up may be installed on the next adjacent floor level.

   b. In the event that the requirements of the subdivision cannot be met at the time of completion of installation, the owner shall have a period of thirty (30) days to comply with the above requirements, provided, however, that during said thirty (30) day period, a battery operated carbon monoxide detector with an alarm be installed.

2. **Approved Carbon Monoxide Detectors**

   Each carbon monoxide detector shall comply with NFPA 720 and be ANSI/UL 2034 listed and IAS certified.

3. **Signage**

   A metal or plastic identification plate shall be permanently mounted to the exterior of the building at a minimum height of eight (8) feet above grade directly in line with the exhaust vent terminal for horizontally vented gas fueled heating unit or equipment. The sign shall read, in print no less than one-half (1/2) inch in size: “GAS VENT DIRECTLY BELOW, KEEP CLEAR OF ALL OBSTRUCTIONS.”

4. **Inspection**

   The state or local gas inspector of the side-wall horizontally vented gas fueled unit shall not approve the installation unless, upon inspection, the inspector observes carbon monoxide detectors and signage installed in accordance with the provisions of 248 CMR 5.08(2)(a) 1-4.

SECTION 3 Gas supply and Piping

3.A Gas Supply and Piping

All Installations must conform to the National Fuel Gas Code ANSI Z223.1/NFPA54, and/or local codes. In Canada, the installation must conform to the latest edition of CSA B149.1 Natural Gas and Propane Gas Installation Code, and/or local codes. Gas piping should be supported by suitable hangers or floor stands, not the unit.

Review the following instructions before proceeding with the installation.

1. Verify that the unit is fitted for the proper type of gas by checking the rating plate.

NOTE: This unit is equipped to operate at elevations up to 2000 feet (610m). However, the unit will function properly without the use of high altitude modification at elevations up to 10,000 feet (3050 m).
For elevations above 2000 ft (600 m), the input gas rating shall be reduced at a rate of 4 percent for each 1000 ft (300 m) above sea level. This must be considered before selecting the equipment size.

2. The gas pressure settings must match fuel type as shown in Table 12.
3. Table 13 and Table 14 on page 23 offer some gas pipe sizing information. Refer to the applicable gas code for more detailed sizing information.
4. Run gas supply line in accordance with all applicable codes.
5. Locate and install manual shutoff valves in accordance with state and local requirements.
6. A sediment trap must be provided upstream of the gas controls.
7. All threaded joints should be coated with piping compound resistant to action of liquified petroleum gas.
8. The unit and its individual shutoff valve must be disconnected from the gas supply piping during any pressure testing of that system at test pressures in excess of 1/2 PSIG (3.45kpa).
9. The unit must be isolated from the gas supply system by closing its individual manual shutoff valve during any pressure testing of the gas supply piping system at test pressures equal to or less than 1/2 PSIG (3.45kpa).
10. The unit and its gas connection must be leak tested before placing it in operation.
11. Purge all air from gas lines

	Natural Gas	LP (propane)
Min	4.0 IN - W.C.	8.0 IN - W.C.
Max	10.5 IN - W.C.	14.0 IN - W.C.

Table 12. Gas Pressure

⚠ WARNING

Do not use open flame to check for leaks. An open flame could Lead to explosion, which could result in property damage, serious injury or death.

⚠ WARNING

If an inline high gas pressure regulator is used, it must be of the lockup type and located a minimum of 10 feet from the unit. Failure to do so may result in insufficient gas volume supplied to the unit.

NOTE: This unit and all other gas units sharing the gas supply line must be firing at maximum capacity to properly measure the inlet supply pressure.
The pressure can be measured at the supply pressure port on the gas valve. Low gas pressure could be an indication of an undersized gas meter, undersized gas supply lines and/or an obstructed gas supply line. The units may be equipped with low and high pressure gas switches that are integrally vent limited. These types of devices do not require venting to atmosphere.

NOTE: After placing the boiler in operation, the ignition system safety shutoff device must be tested. See 10.A on page 105

3.B Gas Pipe Sizing

The following are gas line sizing examples from the National Fuel Gas Code. Size your gas lines properly, based on your installation and all applicable codes.

SCH 40 METAL PIPE CAPACITY FOR 0.60 SPECIFIC GRAVITY NATURAL GAS

NOMINAL PIPE SIZE @ 0.30" W.C. PRESSURE DROP

Nominal:	2	2½	3	4	5
Actual ID:	2.067	2.469	3.068	4.026	5.047
Length (ft)	Capacity in Cubic Feet of Gas per Hour				
10	4,020	6,400	11,300	23,100	41,800
20	2,760	4,400	7,780	15,900	28,700
30	2,220	3,530	6,250	12,700	23,000
40	1,900	3,020	5,350	10,900	19,700
50	1,680	2,680	4,740	9,660	17,500
60	1,520	2,430	4,290	8,760	15,800
70	1,400	2,230	3,950	8,050	14,600
80	1,300	2,080	3,670	7,490	13,600
90	1,220	1,950	3,450	7,030	12,700
100	1,160	1,840	3,260	6,640	12,000
125	1,020	1,630	2,890	5,890	10,600
150	928	1,480	2,610	5,330	9,650
175	854	1,360	2,410	4,910	8,880
200	794	1,270	2,240	4,560	8,260
150	704	1,120	1,980	4,050	7,320
300	638	1,020	1,800	3,670	6,630
350	587	935	1,650	3,370	6,100
400	546	870	1,540	3,140	5,680

Table 13. Pipe Capacity for Natural Gas

Notes:
1. Inlet pressure - Less than 2 psi
2. Pressure drop - 0.5 in w.c.
3. Specific gravity - 0.60
4. Schedule 40 metallic pipe

SCH 40 METAL PIPE CAPACITY FOR 1.50 SPECIFIC GRAVITY UNDILUTED PROPANE

NOMINAL PIPE SIZE @ 11" W.C. INLET AND 0.5" W.C. PRESSURE DROP

Nominal:	1½	2	2½	3	4
Actual ID:	1.61	2.067	2.469	3.068	4.026
Length (ft)	Capacity in Cubic Feet of Gas per Hour				
10	3,520	6,790	10,800	19,100	39,000
20	2,420	4,660	7,430	13,100	26,800
30	1,940	3,750	5,970	10,600	21,500
40	1,660	3,210	5,110	9,030	18,400
50	1,480	2,840	4,530	8,000	16,300
60	1,340	2,570	4,100	7,250	14,800
80	1,230	2,370	3,770	6,670	13,600
100	1,140	2,200	3,510	6,210	124,700
125	1,070	2,070	3,290	5,820	11,900
150	1,010	1,950	3,110	5,500	11,200
175	899	1,730	2,760	4,880	9,950
200	814	1,570	2,500	4,420	9,010
250	749	1,440	2,300	4,060	8,290
300	697	1,340	2,140	3,780	7,710
350	618	1,190	1,900	3,350	6,840
400	560	1,080	1,720	3,040	6,190

Table 14. Pipe Capacity for Propane

Notes:
1. Inlet pressure - 11.0 in w.c.
2. Pressure drop - 0.5 in w.c.
3. Specific gravity - 1.50
4. Schedule 40 metallic pipe
5. Intended use - Pipe sizing between single or second-stage (low pressure) regulator and appliance.

SECTION 4 Water Flow and Headloss Data

4.A General Water Flow Information

This appliance is a water-tube design that requires water flow for operation. Boilers are generally used in closed systems, so Laars bases the water flow data on temperature rise (difference between boiler inlet and outlet temperature.) Water heaters are used in open systems, with new water constantly being introduced to the system. This brings a constant supply of new minerals into the system, as well. Minerals can cause scale to form on the inside surfaces of water heater systems (heaters, tanks, pipes, valves, and other components). Laars uses the water-tube design to its advantage by basing the water flow data on water hardness, to assist in minimizing mineral buildup in the heater's waterways.

4.B Boiler Water Flow & Headloss Data

The water flow and headloss data shown in Table 15 is based on full input of the boiler. The boiler has a 20:1 turndown, meaning it modulates from 5% to 100% of full input. Table 16 shows the water flow required at the the boiler's minimum input, and this is the minimum water flow allowed through the boiler. Running in this condition is very rare, and if the system requires this minimum water flow, the water flow switch may need to be adjusted or replaced. Contact the factory if you have such a system.

Model	25°F		30°F		35°F		40°F	
	Water Flow (gpm)	Headloss * (ft)	Water Flow (gpm)	Headloss * (ft)	Water Flow (gpm)	Headloss * (ft)	Water Flow (gpm)	Headloss * (ft)
1600	122	19.4	100	14.0	87	10.0	76	8.0
2000	150	30.0	128	24.5	109	17.1	95	13.6
2500	190	34.0	158	24.6	136	17.6	119	13.6
3000	226	47.0	190	34.2	164	25.8	142	18.9
3500	266	41.0	222	31.6	190	23.6	166	18.6
4000	300	48.0	255	38.2	218	28.5	190	22.5

*Headloss is for boiler only (no piping)

Model	*14°F*		*17°F*		*19°F*		*22°F*	
	Water Flow (l/m)	*Headloss * (m)*	*Water Flow (l/m)*	*Headloss * (m)*	*Water Flow (l/m)*	*Headloss * (m)*	*Water Flow (l/m)*	*Headloss * (m)*
1600	*462*	*5.9*	*379*	*4.3*	*329*	*3.0*	*288*	*2.4*
2000	*568*	*9.1*	*485*	*7.5*	*413*	*5.2*	*360*	*4.1*
2500	*719*	*10.4*	*598*	*7.5*	*515*	*5.4*	*451*	*4.1*
3000	*856*	*14.3*	*719*	*10.4*	*621*	*7.9*	*538*	*5.8*
3500	*1007*	*12.5*	*840*	*9.6*	*719*	*7.2*	*628*	*5.7*
4000	*1136*	*14.6*	*965*	*11.6*	*825*	*8.7*	*719*	*6.9*

*Headloss is for boiler only (no piping)

Table 15. Boiler Water Flow and Headloss

Model	Water Flow (gpm)	*Water Flow (l/m)*
1600	8	*30*
2000	11	*42*
2500	13	*49*
3000	16	*61*
3500	18	*68*
4000	21	*79*

Table 16. Minimum Allowable Water Flow Rates

4.C Water Heater Water Flow and Headloss Data

Water flow and headloss for water heaters is based on the water's hardness, to help minimize scale (mineral) buildup inside the heater's water tubes. Table 17 shows water flow and headloss based on the hardness of the system's water. Temperature rise is shown for information and testing/troubleshooting purposes.

Model	1-10 Grains Per Gallon Hardness			11-15 Grains Per Gallon Hardness		
	Flow Rate (gpm)	Headloss* (ft)	Temp Rise (°F)	Flow Rate (gpm)	Headloss* (ft)	Temp Rise (°F)
1600	152	31.0	20	177	41.0	17
2000	152	33.0	25	177	43.9	21
2500	190	33.7	25	220	46.0	21
3000	190	36.0	30	220	46.0	26
3500	222	30.6	30	266	40.6	25
4000	224	30.0	34	266	41.2	29

*Headloss is for heater only (no piping)

Model	*1-10 Grains Per Gallon Hardness*			*11-15 Grains Per Gallon Hardness*		
	Flow Rate (l/m)	*Headloss* (m)*	*Temp Rise (°C)*	*Flow Rate (l/m)*	*Headloss* (m)*	*Temp Rise (°C)*
1600	*575*	*9.4*	*11*	*670*	*12.5*	*9*
2000	*575*	*10.1*	*14*	*670*	*13.4*	*12*
2500	*719*	*10.3*	*14*	*833*	*14.0*	*12*
3000	*719*	*11.0*	*17*	*833*	*14.0*	*14*
3500	*840*	*9.3*	*17*	*1007*	*12.4*	*14*
4000	*848*	*9.1*	*19*	*1007*	*12.6*	*16*

*Headloss is for heater only (no piping)

Table 17. Water Heater Water Flow and Headloss Data

SECTION 5 Piping

5.A Boiler Water Piping

5.A.1 Boiler Water Connections

NOTE: This unit must be installed in a closed pressure system with a minimum of 12 psi (82.7 kPa) static pressure at the boiler.

The water piping should be supported by suitable hangers or floor stands. Do not support the piping with this unit. The hangers used should allow for expansion and contraction of pipe. Rigid hangers may transmit noise through the system resulting from the piping sliding in the hangers. We recommend that padding be used when rigid hangers are installed. Maintain 1" (2.5 cm) clearance to combustibles for all hot water pipes.

Suggested piping diagrams are shown in Figure 8 through Figure 11. These diagrams are meant only as guides. Components required by local codes must be properly installed.

This unit's efficiency is higher with lower return water temperatures. Therefore, to get the best low return temperature with multiple boilers, pipe as shown in Figure 10 and Figure 11 on page 30.

Pipe the discharge of the relief valve (full size) to a drain or in a manner to prevent injury in the event of pressure relief. Install an air purger, air vent, expansion tank, hydronic flow check valve in the system supply loop, and any other devices required by local codes. The minimum fill pressure must be 12 psig (82.7 kPa). Install shutoff valves where required by code.

5.A.2 Cold Water Make-Up

1. Connect the cold water supply to the inlet connection of an automatic fill valve.
2. Install a suitable back flow preventer between the automatic fill valve and the cold water supply.
3. Install shut off valves where required.

In some installations, a hot water heating boiler is connected to heating coils located in an air handling unit where the coils may be exposed to refrigerated air circulation. In these cases, the boiler piping system must be equipped with flow control valves or other automatic means to prevent gravity circulation of the boiler water during the cooling cycle.

A boiler installed above radiation level, or as required by the authority having jurisdiction, must be provided with a low water cutoff device either as a part of the boiler or at the time of boiler installation.

5.A.3 Freeze Protection

This unit may be installed indoors or outdoors. If installing outdoors in a location that may experience freezing temperatures, precautions must be taken to prevent water in the heat exchanger and condensate inside and outside of the boiler from freezing. Damage due to freezing water or condensate is not covered by the warranty.

If installed indoors, and there is an event such as a power outage, interruption of gas supply, failure of system components, activation of safety devices, etc., this may prevent a boiler from firing. **Any time a boiler is subjected to freezing conditions, and the boiler is not able to fire, and/or the water is not able to circulate, there is a risk of freezing in the boiler or in the pipes in the system.** When water freezes, it expands. This may result in bursting of pipes, or damage to the boiler, and this could result in leaking or flooding conditions.

Do not use automotive antifreeze. To help prevent freezing, The manufacturer recommends the use of inhibited glycol concentrations between 20% and 35% glycol. Typically, this concentration will serve as burst protection for temperatures down to approximately -5°F (-20°C). If temperatures are expected to be lower than -5°F (-20°C), glycol concentrations up to 50% can be used. **When concentrations greater than 35% are used, water flow rates must be increased to maintain the desired temperature rise through the boiler.**

⚠ WARNING

Glycol must not be used in domestic hot water applications. Refer to 5.B.4 on page 32 for instructions on freeze protection for units (domestic hot water).

Different glycol products may provide varying degrees of protection. Glycol products must be maintained properly in a heating system, or they may become ineffective. Consult the glycol specifications, or the glycol manufacturer, for information about specific products, maintenance of solutions, and set up according to your particular conditions.

The following manufacturers offer glycols, inhibitors, and anti foamants that are suitable for use in the unit. Please refer to the manufacturers instructions for proper selection and application.

- Sentinel Performance Solutions Group

- Hercules Chemical Company
- Dow Chemical Company

The boiler control offers some assistance with freeze protection, as long as the boiler is energized, and able to fire.

1. If the outlet sensor detects less than 45°F, the control energizes the boiler pump.
2. If the outlet sensor detects less than 35°F, the control will fire at low rate.
3. Once in freeze protect mode, the boiler will remain in that state until the outlet sensor detects greater than 50°F.

5.A.4 Suggested Boiler Piping Schematics

This boiler is a high efficiency appliance. Boiler efficiency can be maximized by using piping and distribution configurations that return the lowest temperature possible to the boiler, while still meeting the needs of the system.

Figure 8 on page 27 through Figure 11 on page 30 show suggested piping configurations for boilers. These diagrams are only meant as guides. All components or piping required by local code must be installed.

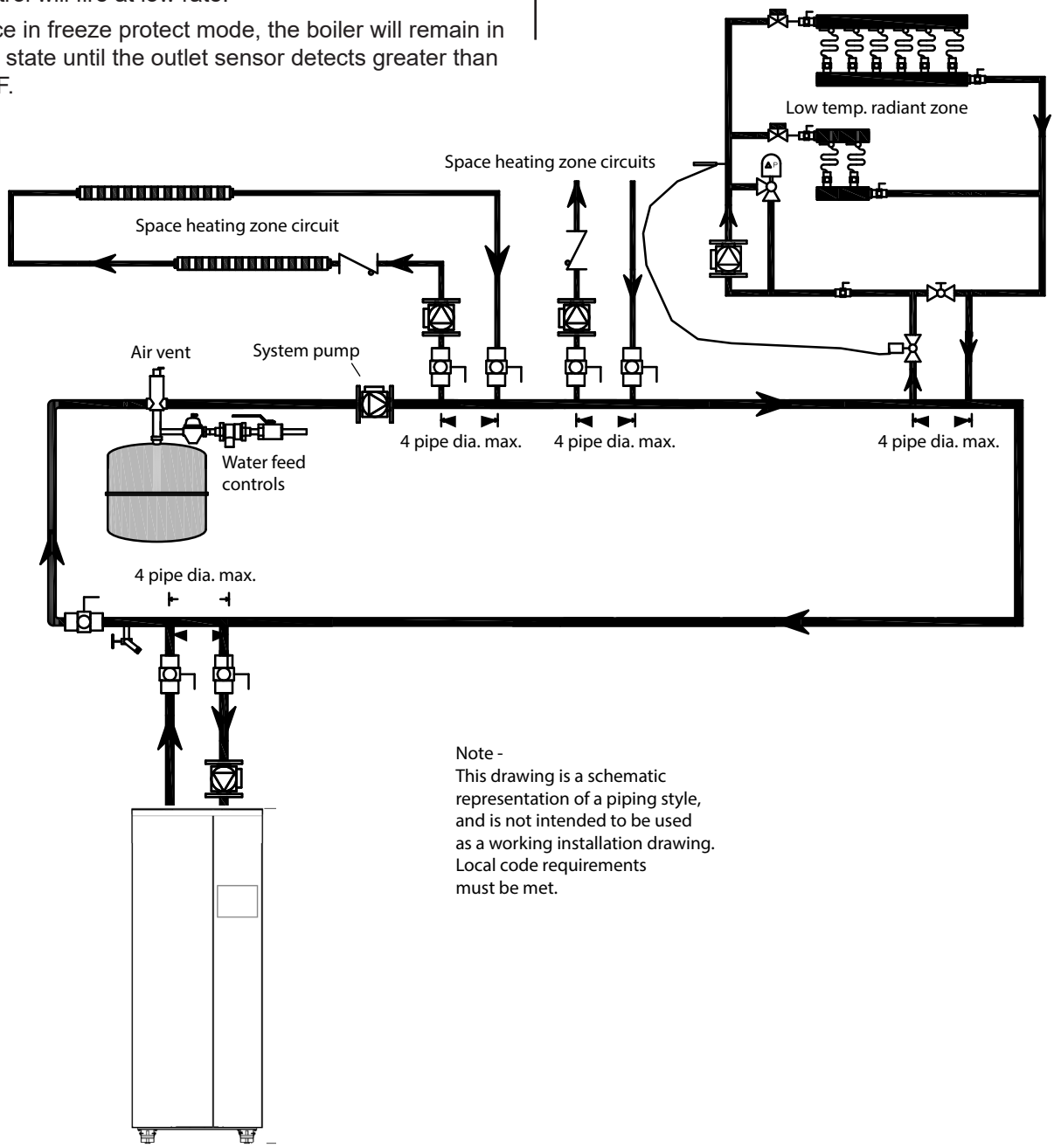

Figure 8. Boiler Piping — Single Boiler, Multiple Temperature Zones
Zoning with circulators

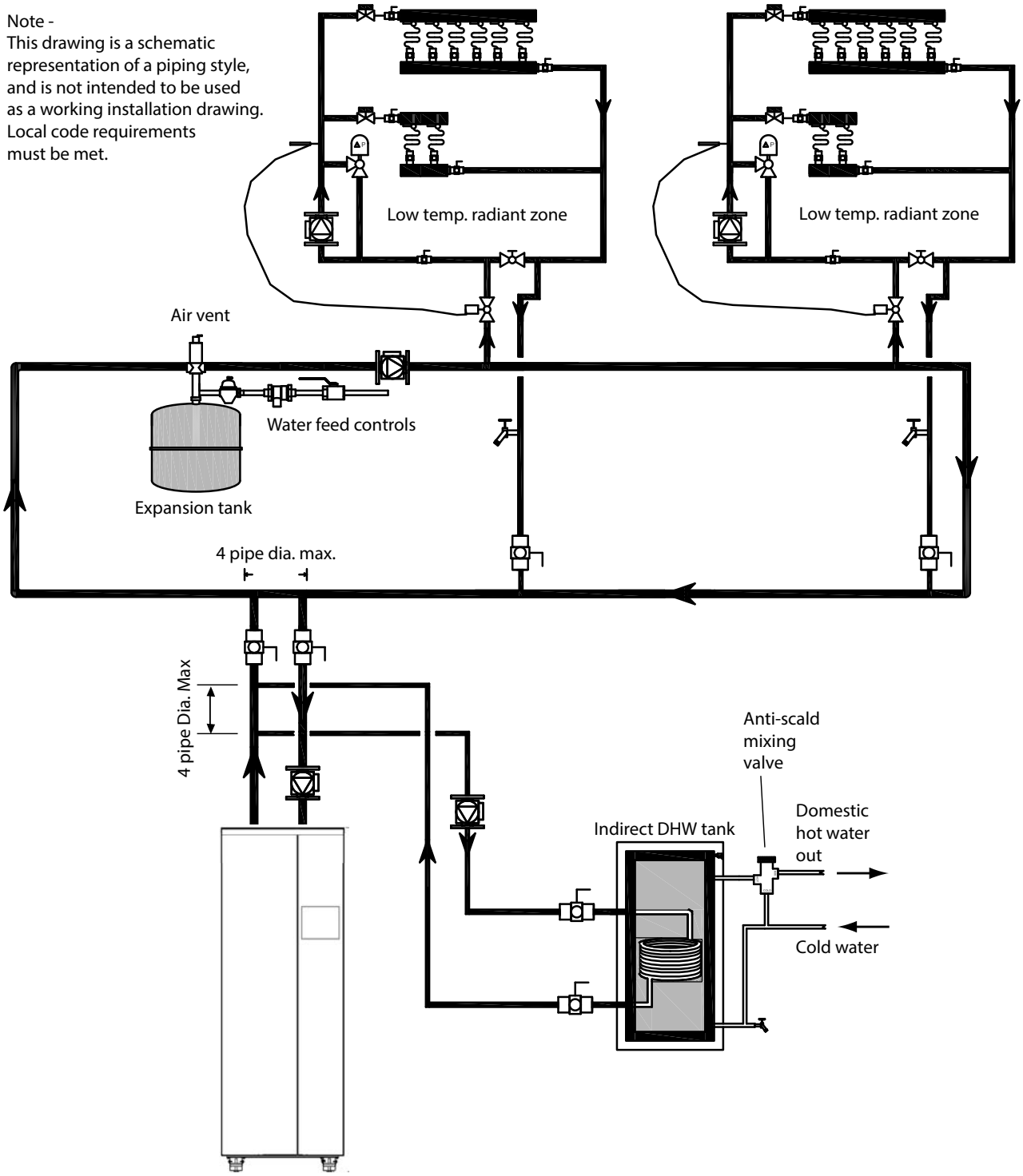

Figure 9. Boiler Piping — Single Boiler with Low Temperature Zones and Indirect DHW Tank Indirect tank directly off of boiler

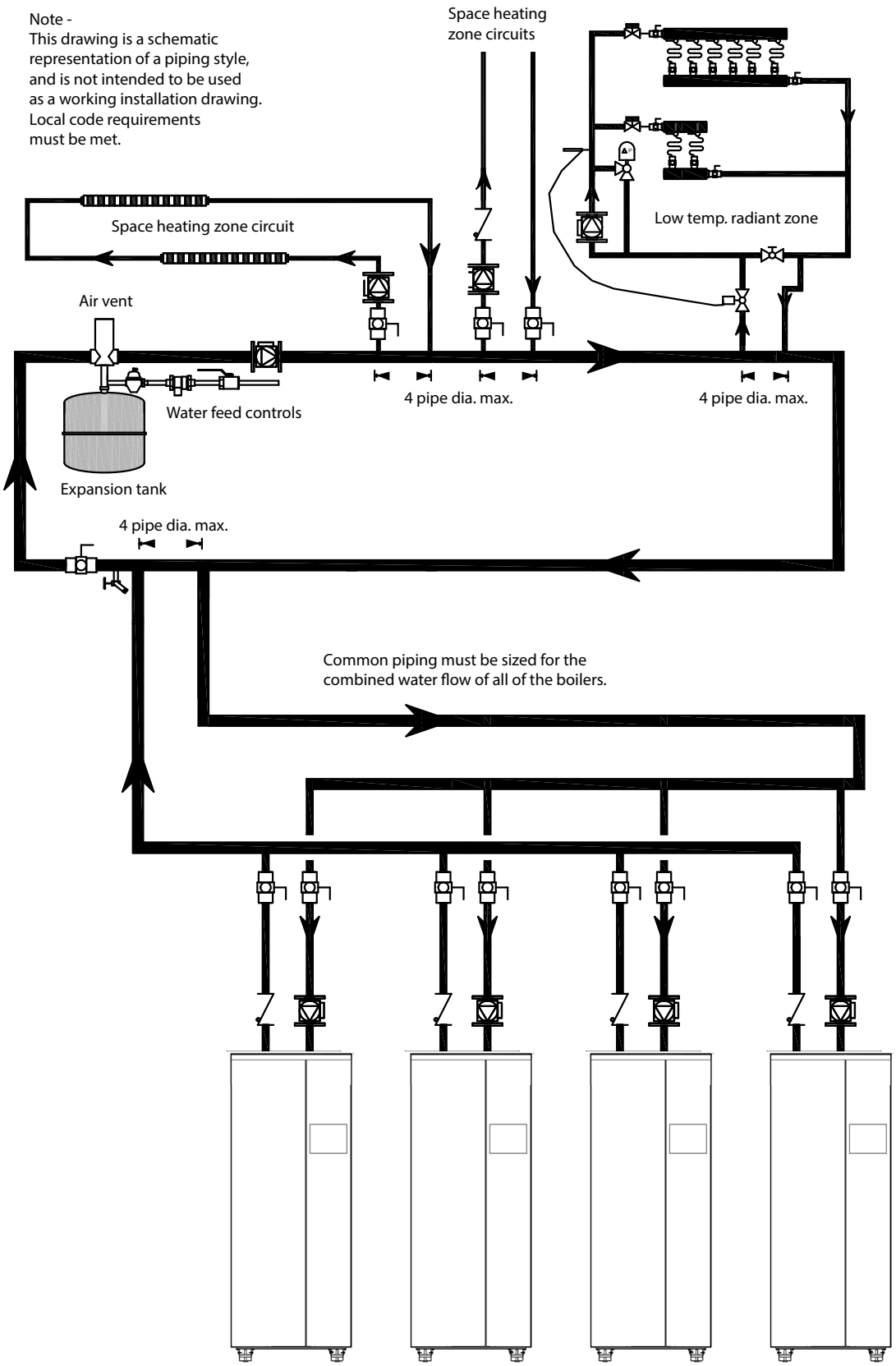

Figure 10. Boiler Piping — Multiple Boilers, Multiple Temperature Zones, Reverse Return.
Zoning with circulators

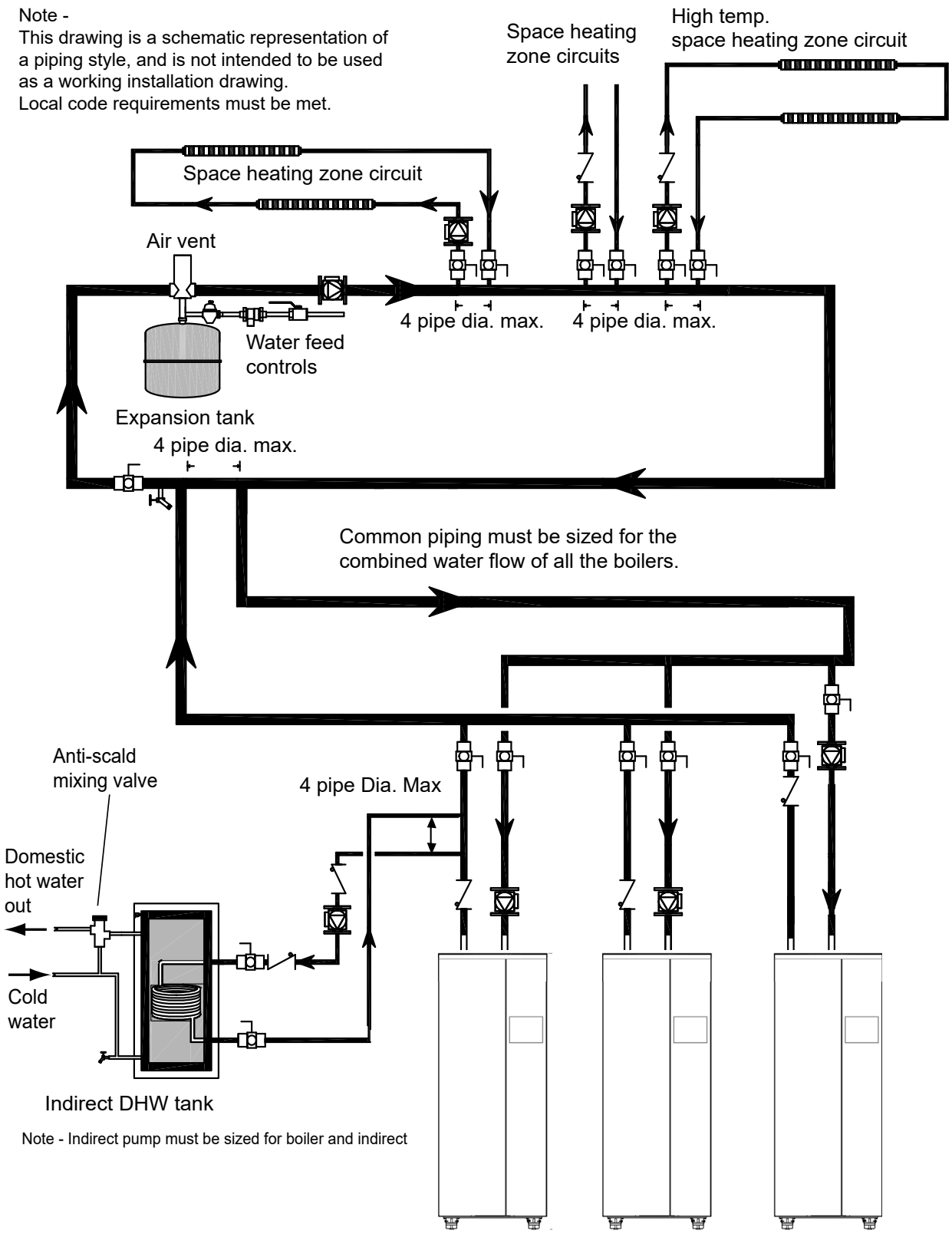

Figure 11. Boiler Piping — Multiple Boilers, Indirect DHW Off of One Boiler

5.B Water Heaters

5.B.1 Water Quality

Water heaters must be installed in water conditions of 15 gpg hardness or less, with a pH range of 6.5 to 9.5 pH. Values outside of this range may reduce the life expectancy of the product. Operating at higher water hardness levels will cause heat exchanger fouling, erosion, or corrosion, Leading to premature component failure, reduced efficiency, heat exchanger failure or system failure. Failure of this type will not be warranted. If the water in use exceeds the conditions recommended, water softeners or other devices should be installed to improve water quality.

5.B.2 Heater Water Connections

The water piping should be supported by suitable hangers and floor stands. Do not support the piping with this unit. The hangers used should allow for expansion and contraction of copper pipe. Rigid hangers may transmit noise through the system resulting from piping sliding in the hangers. We recommend that padding be used when rigid hangers are installed. Maintain 1” (2.5 cm) clearance to combustibles for hot water pipes.

Pipe the discharge of the relief valve (full size) to the drain or in a manner to prevent injury in the event of pressure relief. Install a diaphragm-type expansion tank, flow check, and shutoff valves where needed or as required by code.

5.B.3 Cold Water Make-Up

The cold water make-up may be connected to the tank as shown in Figure 12 through Figure 14. If the tank does not have a tapping for the cold water supply, the supply may be run to the pipe between the tank and boiler inlet. Install back-flow preventers and shut-offs where needed or required by code.

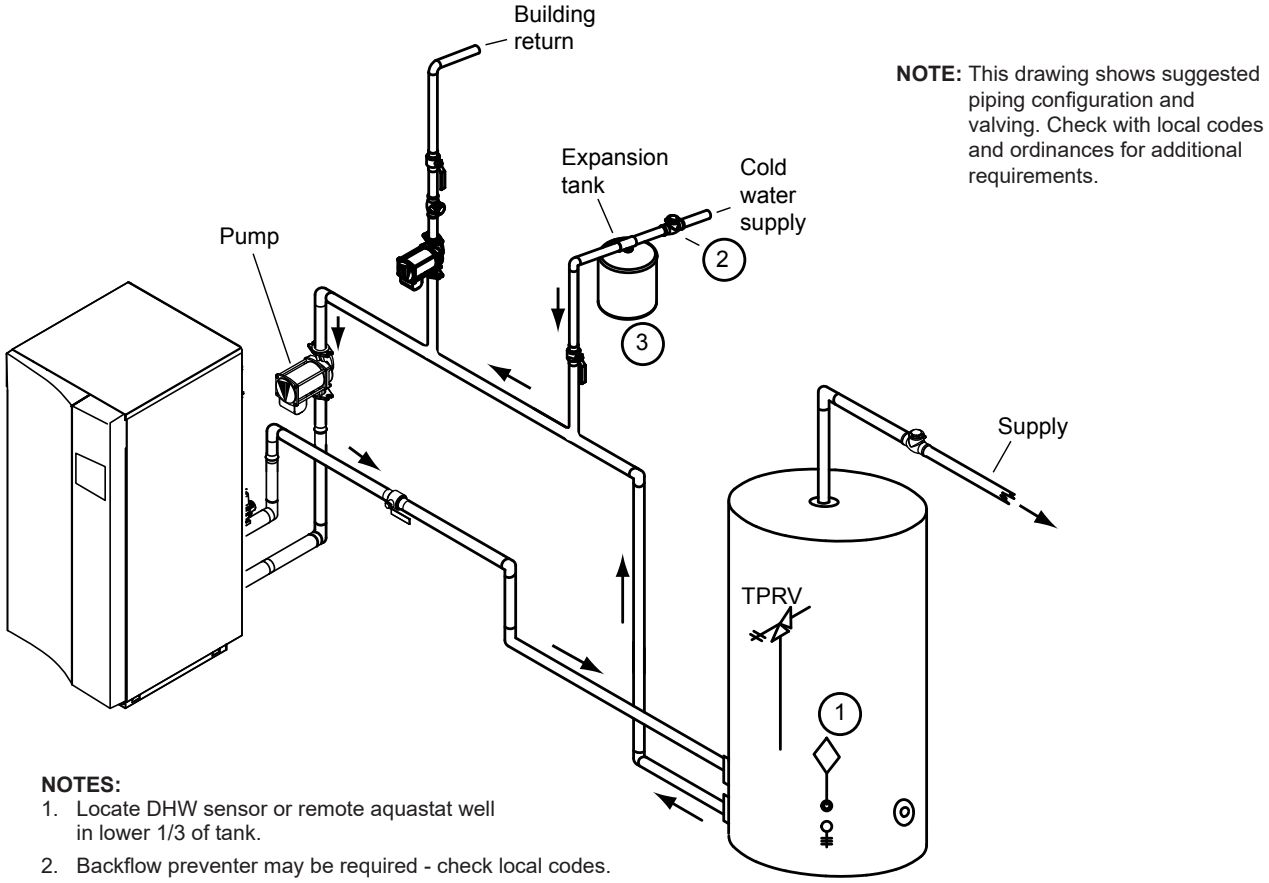

NOTE: This drawing shows suggested piping configuration and valving. Check with local codes and ordinances for additional requirements.

NOTES:

1. Locate DHW sensor or remote aquastat well in lower 1/3 of tank.
2. Backflow preventer may be required - check local codes.
3. Thermal expansion tank may be required - check local codes.
4. **Caution: Pump sizing must be based upon water hardness at job site.**
5. If the tank does not have a tapping for the cold water supply, the supply may be run to the pipe between the tank and boiler inlet.

Figure 12. DHW Piping - One Heater, One Vertical Tank

5.B.4 Freeze Protection

If installing outdoors in a location that may experience freezing temperatures, precautions must be taken to prevent water in the heat exchanger and condensate inside and outside of the boiler from freezing. Damage due to freezing water or condensate is not covered by the warranty.

If installed indoors and there is an event such as a power outage, component failure or other issue when freezing is likely, the heater and system must be drained to avoid the risk of damage due to freezing. Glycol must ***not*** be used in volume water heating applications.

5.B.5 Suggested Piping Schematics

This heater is a high efficiency appliance. Heater efficiency can be maximized by using piping configurations that return the lowest temperature possible to the heater, while still meeting the needs of the system.

Figure 12 through Figure 14 show suggested piping configurations for water heaters. These diagrams are only meant as guides. All components or piping required by local code must be installed.

NOTES:

1. Locate the DHW sensor or remote aquastat well in lower 1/3 of tank.
2. Backflow preventer may be required - check local codes.
3. Thermal expansion tank may be required - check local codes.
4. **Caution: Pump sizing must be based upon water hardness at job site.**
5. If the tank does not have a tapping for the cold water supply, the supply may be run to the pipe between the tank and boiler inlet.
6. This piping used only with Custom Tank System using large draw down and sparge tube.

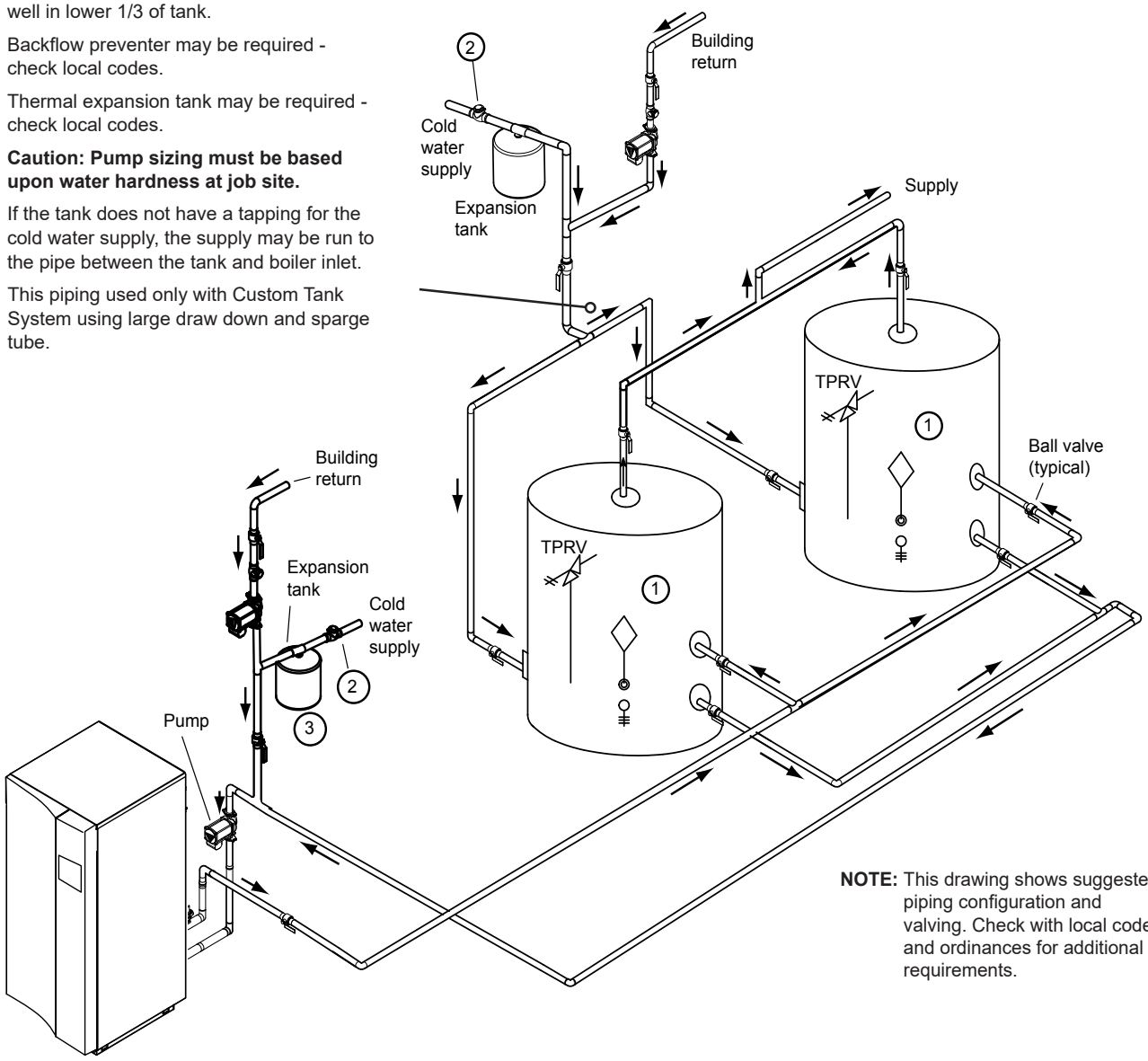

NOTE: This drawing shows suggested piping configuration and valving. Check with local codes and ordinances for additional requirements.

Figure 13. DHW Piping - One Heater, Two Vertical Tanks

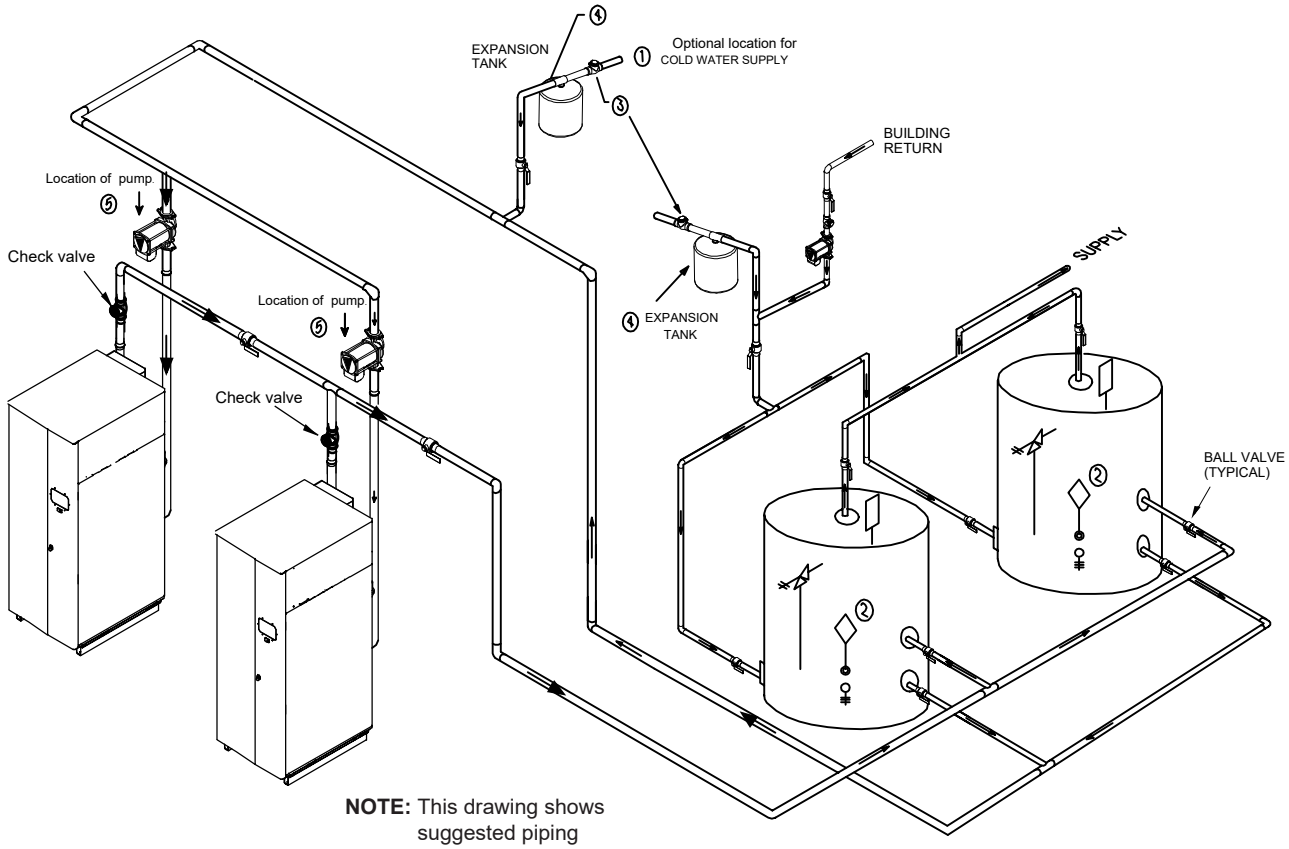

NOTE: This drawing shows suggested piping configuration and valving. Check with local codes and ordinances for additional requirements.

NOTES:

1. Optional CWMU & recirculation line location.
2. Locate NTV DHW sensor or remote aquastat well in lower 1/3 of tank.
3. Back Flow Preventer may be required. Check local codes.
4. Thermal expansion tank may be required. Check local codes.
5. Factory mounted pumps are sized for a max pipe length of 30' total, 6-90° elbows, full pipe size.
6. **CAUTION: Pump sizing must be based upon water hardness at job site.**

Figure 14. DHW Piping - Two Heaters, Two Vertical Tanks

SECTION 6 Condensate Drain Trap

This appliance creates condensation, as a by-product of high combustion efficiency. The condensate must be drained from unit and from the vent system.

A combination condensate drain/trap is included the unit, for on-site assembly. See Figure 2 on page 10 This is used to drain the condensate from the heat exchanger of the unit. This condensate drain trap must be installed to prevent the accumulation of condensate. Connect a ¾" PVC pipe between the drain connection and a floor drain. The PVC pipe must continuously slope downward toward the drain, with no spiraling. If there is no accessible floor drain, or if the drain pipe cannot be installed with the proper slope, a condensate pump will be needed to ensure that condensate is removed.

The condensate that forms in the vent pipe should also be drained to help prevent excessive condensate from entering the unit at the vent. The vent condensate is typically drained a drain tee located in the first section of vent pipe, as this should be the lowest section of the vent pipe.

Consult local codes for direction on disposal of condensate. In some cases (code requirements or drain material), condensate will need to be neutralized. A condensate neutralizer is not included with the unit, but is available from Laars as an accessory. If a neutralizer is required, it is helpful to install the boiler or water heater on a raised 4" concrete platform. This will generally allow sufficient elevation for the condensate neutralizer to be installed below the condensate trap. See Figure 15.

If the unit is installed outdoors in a location that may experience freezing temperatures, precautions must be taken to prevent condensate from freezing. Damage due to freezing condensate is not covered by the warranty.

⚠ CAUTION

Condensate is mildly acidic (pH=5) and may harm some floor drains and/or pipes, particularly those that are metal. Ensure that the drain, drainpipe, and anything that will come in contact with the condensate can withstand the acidity, or neutralize the condensate before disposal. **Damage caused by failure to install a neutralizer kit or to adequately treat condensate will not be the manufacturer's responsibility.**

Figure 15. Raised Concrete Platform

SECTION 7 Electrical Connections

7.A Installation Warnings

⚠ CAUTION

The supply voltage to this unit must not be disconnected, except for service or isolation, or unless otherwise instructed by procedures outlined in this manual. To signal a call for heat, use the 24V field interlock, as shown in the wiring diagram.

DO NOT MAKE AND BREAK THE LINE VOLTAGE TO THE UNIT TO SIGNAL A CALL FOR HEAT. A call for heat/end call for heat MUST be connected to the field interlock terminals. Some components are designed to have constant voltage during normal operation. If the units supply voltage is toggled as a call for heat signal, premature failure of these components may result.

The unit does not recognize 4mA as a signal to shut off. If the call for heat is not connected between the field interlock terminals, the unit will remain in low fire when it sees 4mA as a modulating signal.

⚠ WARNING

The unit must be electrically grounded in accordance with the requirements of the authority having jurisdiction or, in the absence of such requirements, with the latest edition of the National Electrical Code, ANSI/NFPA 70, in the U.S. and with the latest edition of CSA C22.1 Canadian Electrical Code, Part 1, in Canada. Do not rely on the gas or water piping to ground the metal parts of the unit. Plastic pipe or dielectric unions may isolate the unit electrically. Service and maintenance personnel, who work on or around the unit, may be standing on wet floors and could be electrocuted by an ungrounded unit. Electrocution can result in severe injury or death.

Single pole switches, including those of safety controls and protective devices, must not be wired in a grounded line.

All electrical connections are made on the terminal blocks that are located inside the control panel.

All internal electrical components have been prewired. No attempt should be made to connect electrical wires to any other location except the terminal blocks.

⚠ CAUTION

Label all wires prior to disconnection when servicing controls. Wiring errors can cause improper and dangerous operation. Verify proper operation after operation servicing.

⚠ ATTENTION

Au moment de l'entretien des commandes, étiquetez tous les fils avant de les débrancher. Les erreurs de câblage peuvent nuire au bon fonctionnement et être dangereuses. S'assurer que l'appareil fonctionne adéquatement une fois l'entretien terminé.

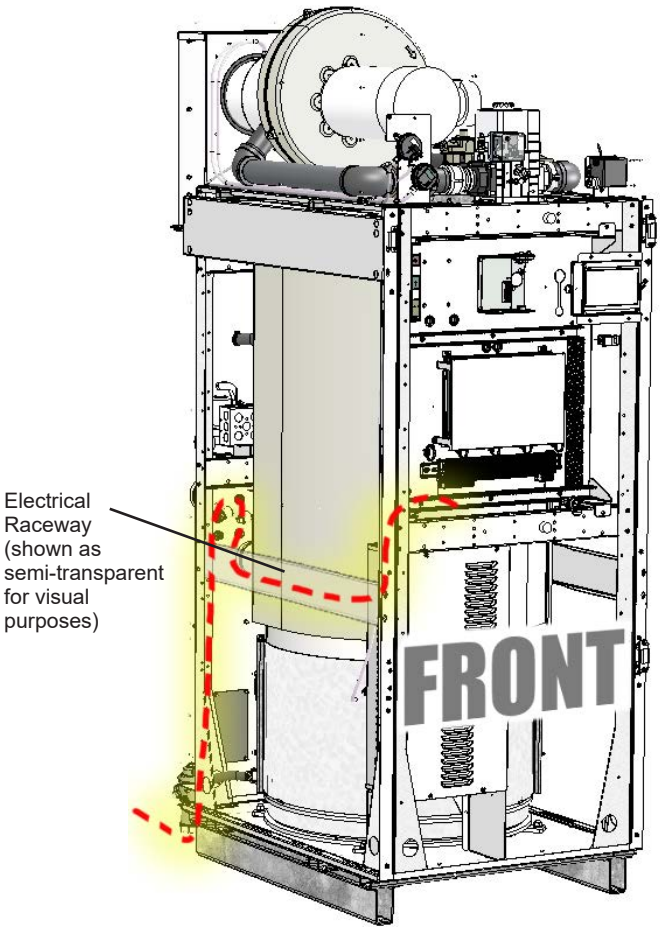

Figure 16. Electrical Connections

The control panel swings open for wiring access (also see Figure 17 on page 36). Always run all field wiring to the left as illustrated, as running wires to the right will prevent the opening of the control panel during servicing.

7.B Main Power Connections

This unit is provided with an electrical junction box in the rear panel for main power connections. See Figure 17. All power wires are factory installed between this junction box and the main high voltage box at the front of the unit. The unit is available with multiple voltage packages to adapt to customer needs ranging from 120-600 volts with single or 3 phase versions. Refer to the rating plate and Table 18 for appropriate voltage and current ratings.
As a common industry practice, the manufacturer has color coded the single and three phase wires as shown in Table 19.

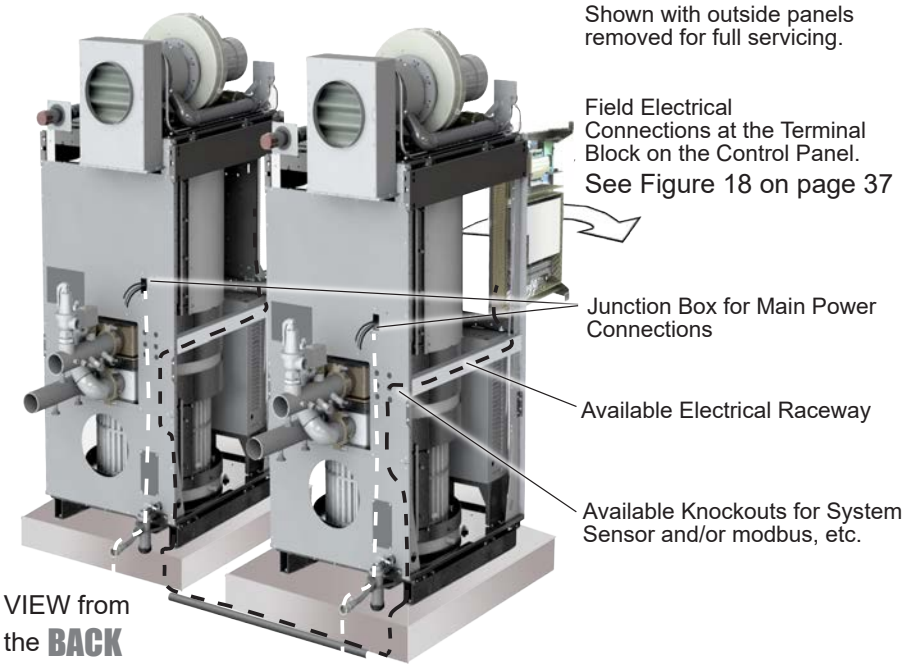

Figure 17. Wiring Access

On single phase models, the incoming voltage will be protected by the appropriate circuit breaker, sized and installed by a qualified electrician/ authorized personnel. The 120-volt and 24-volt systems will be protected with resettable fuses mounted in the top of the high voltage box. The 24-volt transformer is also redundantly protected by its integrated 4 amp resettable fuse.

On three phase models, a step down transformer (which is protected using an appropriate din rail mounted circuit breaker) generates 120-volt single phase to power the 24-volt transformer. The 120-volt and 24-volt outputs of either transformer are protected with resettable fuses mounted in the top of the high voltage box. The 24-volt transformer is also redundantly protected by its integrated 4 amp resettable fuse.

All power connections must be run through the back panel as shown in Figure 17.

Size	1600			2000					
Voltage	120	240/220	208 1Φ	120	240/220	208 1Φ	208 3Φ	480	600
FLA	6.2	3.4	3.6	18.6	10.1	12.5	7.5	3.5	4.4
MCA	7.8	4.2	4.5	23.3	12.7	15.6	9.4	4.4	5.5
MOP	20	15	15	30	25	25	15	15	15

Size	2500/3000			3500/4000			
Voltage	208 3Φ	480 3Φ	600 3Φ	208 3Φ	480	600	
FLA	9.5	4.4	3	9.9	3.6	4.5	Full Load Amperage
MCA	12	6	4	12	5	6	Minimum Circuit Ampacity
MOP	20	15	15	20	15	15	Max Over-current Protection

Table 18. Electrical Data

Single Phase				Three Phase			
	120	240	208		600	480	208
L1	Blk	Blk	Blk	L1	P	BR	Blk
L2	Wht	Red	Red	L2	V	O	Red
				L3	T	Y	BL

Table 19. Voltage Phase Color Identification

7.C Control Panel Layout

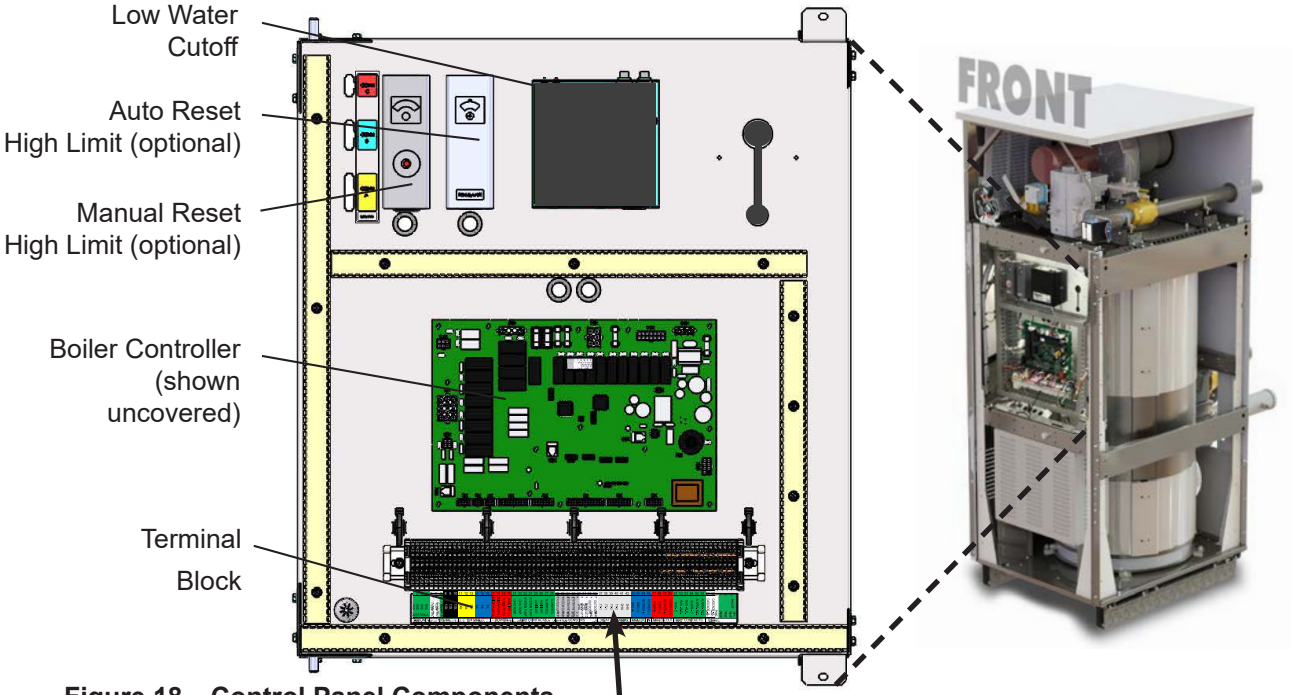

Figure 18. Control Panel Components

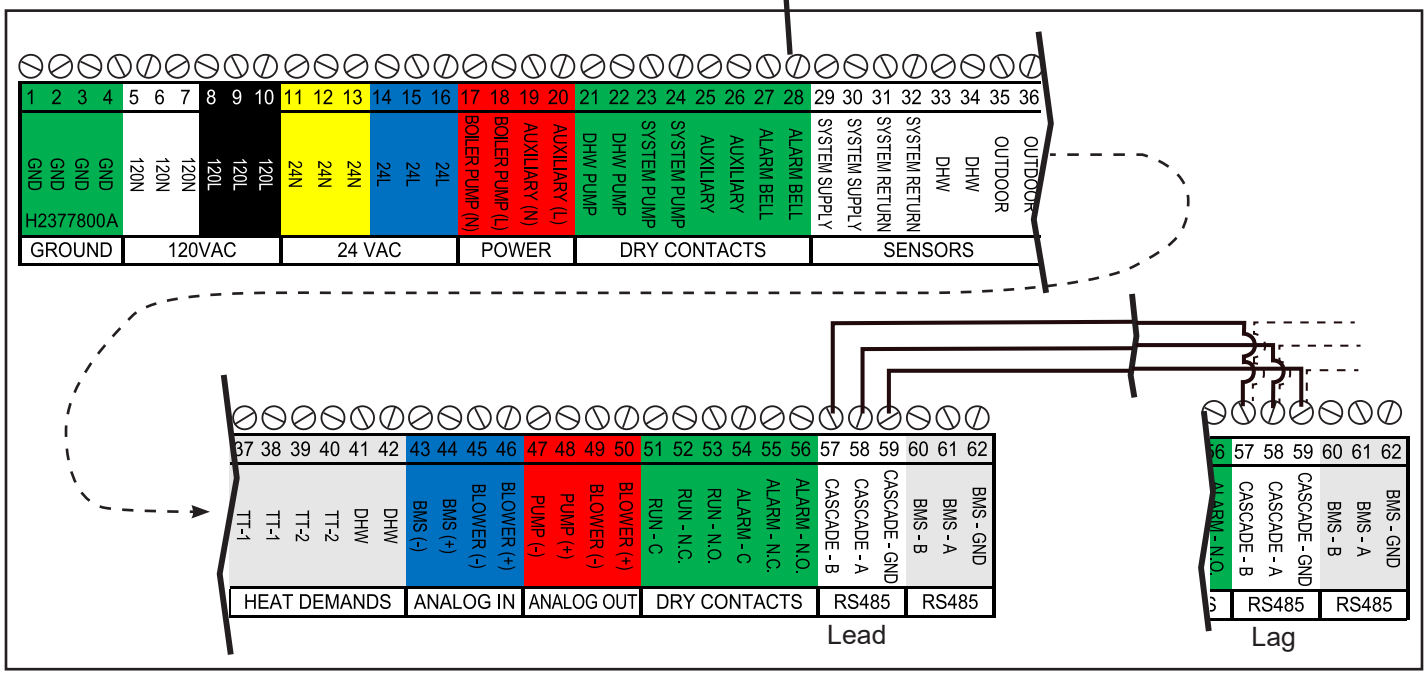

Figure 19. Field Connection Terminal Block

7.D Field Connections

Wiring for all Field Connections must be run along the inside face of the available electrical raceway to the back of the unit. See Figure 17. and See Figure 19.

7.D.1 Power

Boiler Pump – if connecting a boiler contactor or pump, use terminals 17 (neutral) and 18 (line voltage). The output of these terminals is 120VAC with a maximum output current of 1.5 amps. Boiler pump functionality is configured using the touch screen.

Auxiliary – no functionality is available on this unit.

7.D.2 Dry Contacts

DHW Pump - if connecting a domestic hot water (DHW) pump, use terminals 21 and 22 (See Figure 19) as this is a dry contact, the DHW pump supply voltage or DHW

NOTE: When running the Power and Field Connection wirings between the units (Lead Lag, System Sensor, Outdoor Sensor, Building Automation, etc.), it is necessary to exit and enter the units through the lower back panels so that during future servicing, the wires are not in the way and do not have to be disconnected in order to remove the top and side panels.

AVIS: Lors de l'exécution du domaine d'alimentation et les fils électriques de connexion entre les unités (Lead Lag, Capteur, système capteur extérieur, domotique, etc.), il est utile pour sortir et entrer les unités à travers la partie inférieure arrière de sorte qu'au cours de l'entretien futur, les fils ne sont pas dans la voie et n'ont pas à être déconnecté afin d'enlever le haut et le côté.

pump relay coil voltage would be applied at terminal 21, and when the DHW pump is activated, would be available at terminal 22. Contact ratings are 250VAC, 1.5A maximum. DHW pump functionality is configured using the touch screen.

System Pump - if connecting a system pump, use terminals 23 and 24. As this is a dry contact, the system pump supply voltage or system pump relay coil voltage would be applied at terminal 23, and when the system pump is activated, would be available at terminal 24. Contact ratings are 250VAC, 1.5A maximum. System pump functionality is configured using the touch screen.

Auxiliary – no functionality is available on this unit.

Alarm Bell – if connecting an alarm bell, use terminals 27 and 28. As this is a dry contact, the alarm bell supply voltage is applied at terminal 27, with the alarm bell connected to terminal 28.

7.D.3 Temperature Sensors

System Supply - if used, is connected to terminals 29 and 30 (See Figure 19 on page 37). When connected, the controller automatically detects the presence of this sensor and the temperature is shown on the home screen above the red system supply arrow. When installed, the unit controls the firing rate to maintain the system supply temperature to the heat demand set point.

System Return - if used, is connected to terminals 31 and 32. When connected, the controller automatically detects the presence of this sensor and the temperature is shown on the home screen above the blue system output arrow. There is no control logic associated with this sensor.

Domestic Hot Water (DHW) - if used, is connected to terminals 33 and 34. When connected, the unit will use this sensor to perform the DHW thermostat function and the temperature is shown on the home screen below the faucet icon. The controller automatically detects the presence of this sensor and initiates a call for heat when the DHW temperature drops below the DHW set point by the value of the DHW On Hysteresis (DHW Set Point – DHW On Hysteresis = DHW heat demand).

Outdoor - if used, is connected to terminals 35 and 36. When connected, the controller automatically detects the presence of this sensor and the temperature is shown on the home screen as the Outdoor Ambient Temperature (OAT). If installed, options such as outdoor reset and warm weather shutdown can be enabled through the display. Always install the Outdoor Sensor at an outdoor location that is not affected by false temperature readings such as sunlight or hot equipment.

⚠ WARNING

Electrical Shock Hazard
Electrical shock can cause severe injury, death or property damage. Disconnect the power supply before beginning installation or changing the wiring to prevent electrical shock or damage to the equipment. It may be necessary to turn off more than one power supply disconnect.
All electrical wiring is to be done in accordance with local codes, or in the absence of local codes, with:
1) The National Electrical Code ANSI/NFPA No. 70 - latest Edition, or
2) CSA STD. C22.1 "Canadian Electrical Code - Part 1." This unit must be electrically grounded in accordance with these codes.

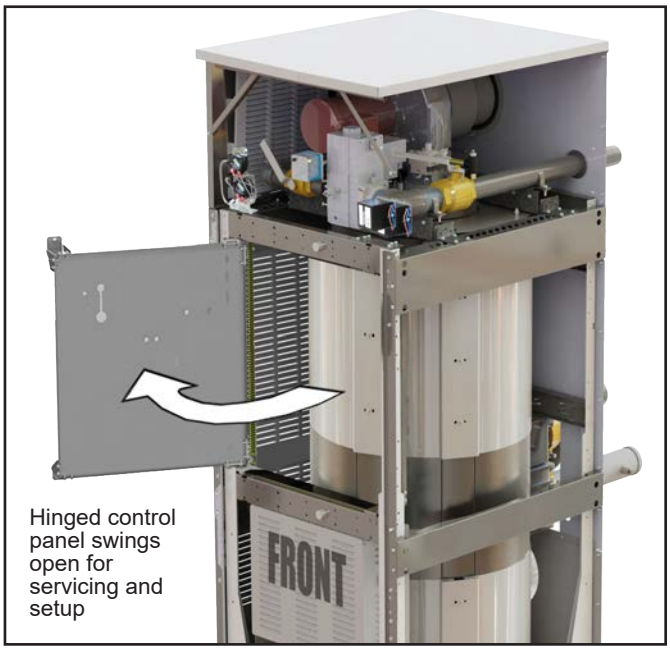

Figure 20. Hinged Control Panel

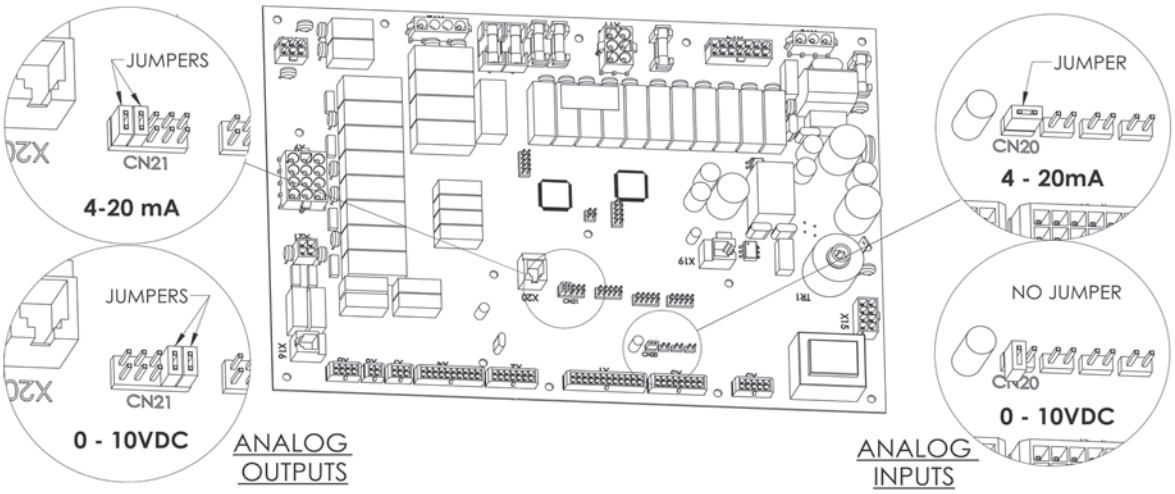

Figure 21. Jumper locations at the inputs

7.D.4 Heat Demands

TT1 - if a thermostat/aquastat or end switch (isolated contact only) is used as a heat demand, connect to terminals 37 and 38 (See Figure 19 on page 37). TT1 functionality is configured on the touch screen on the CH1/DHW1 screens.

TT2 – if an additional thermostat/aquastat or end switch (isolated contact only) is required as a heat demand, connect to terminals 39 and 40. TT2 functionality is configured on the touch screen on CH2/DHW2 screens.

DHW – if an aquastat, end switch (isolated contact only), or flow switch is used as a DHW heat demand, connect to terminals 41 and 42. If preferred, a DHW tank sensor can be used in lieu of an aquastat to generate a heat demand.

NOTE: TT1, TT2, and DHW heat demand contacts must be dry contacts. The controllers heat demand voltage is 24VDC.

Refer to CH1 in 8.G on page 98– Heat Demands.

7.D.5 Analog In and Analog Out

Inputs

BMS – if an analog input (0-10VDC or 4-20mA) from a BMS is used as a remote set point or remote firing rate command, wire to terminals 43 and 44 (See Figure 19 on page 37). Polarity is shown on the terminal label. Selecting voltage or current input is accomplished through jumper placement on the control board. Analog BMS functionality is configured using the touch screen.

Blower – this input is factory wired. When using a VFD for blower speed control, this input provides speed feedback from the VFD to the controls.

Outputs

Pump – when using Vari-Prime pump control, wire the pump speed wires to terminals 47 and 48. Polarity is shown on the terminal label. Selecting voltage or current output is accomplished through jumper placement on the control board. Vari-Prime functionality is configured using the touch screen.

Blower – this output is factory wired. When using a VFD for blower speed control, this output provides the speed signal to the VFD.

7.D.6 Dry Contacts. Run & Alarm

Run - when used, is connected to terminals 51 (common), 52 (normally closed), and 53 (normally open) (See Figure 19 on page 37). The controller closes the normally open set of contacts whenever the unit is running. Contact ratings are 250VAC, 0.6A maximum.
Alarm - when used, is connected to terminals 54 (common), 55 (normally closed), and 56 (normally open). The controller closes the normally open set of contacts whenever the unit is locked out. Contact ratings are 250VAC, 0.6A maximum.

7.D.7 RS 485 for Cascade (Lead Lag)

Cascade - Prior to wiring units for cascade operations, select one unit as the Lead boiler/heater. Other units connected to the Lead boiler/heater will be referred to as Lag units. Communication between Lead and Lag units is accomplished using RS485. When wiring these units for cascade operations, use terminals 57, 58, and 59 (See Figure 19 on page 37). Use 2-wire twisted pair, shielded w/drain (communication cable) between units. Connect one wire of the communication cable to A (-), terminal 58, and the other wire to terminal B (+), terminal 57, and the drain wire to GND, terminal 59. Connect the other end of the cable to the next unit, matching the termination wiring on the previous unit, except for GND. Only connect the drain wire to ground on one end of the cable to avoid ground loop issues. If more than two units are cascaded together, daisy chain the wiring from unit to unit, keeping the cables as short as possible. A system supply sensor must be installed and connected to the Lead boiler. The Lead boiler will use this system supply sensor as the temperature control sensor for cascade operations. TT1 terminals are used to initiate a heat demand at the Lead boiler.

Section 8.D.4 on page 69 shows how these systems are configured in the touchscreen controls.

7.D.8 RS485 BMS

BMS – if communicating to the unit via RS485 serial communications, either Modbus or BACnet MSTP, connect to terminals 60, 61, and 62 (See Figure 19 on page 37). Use 2-wire twisted pair, shielded w/drain (communication cable) between units. Connect one wire of the communication cable to A (-), terminal 61, and the other wire to terminal B (+), terminal 60, and the drain wire to GND, terminal 62.

Section 8.D.11.d on page 89 shows how these systems are configured in the touchscreen controls.

NOTE: A system supply sensor (supplied with each unit) must be installed and connected to the Lead boiler/heater. The Lead boiler/heater will use this system supply sensor as the temperature control sensor for cascade operations.

7.E Modbus and BACnet Memory Map

Modbus Address	Type	R/W	Map Descriptor Name	BACnet Data Type	BACnet Object ID	Read/Write	Notes
0	S16	Read	Inlet Sensor	AI	0	Read	
1	S16	Read	Outlet Sensor	AI	1	Read	
2	S16	Read	Flue Sensor	AI	2	Read	
3	S16	Read	DHW Sensor	AI	3	Read	
4	S16	Read	System Inlet Sensor	AI	4	Read	
5	S16	Read	System Outlet Sensor	AI	5	Read	
6	S16	Read	Outdoor Sensor	AI	6	Read	
12	S16	Read	Flame Signal 1	AI	12	Read	
14	S16	Read	0-10VDC (4-20mA) Input for BMS	AI	14	Read	
17	S16	Read	0-10VDC (4-20mA) Input for Blower Speed	AI	17	Read	
18	S16	Read	Safety Chain Status	AI	18	Read	bit0 = Flow Switch
							bit1 = LWCO
							bit2 = MRHL
							bit3 = Blocked Flue
							bit4 = High Gas Pressure
							bit5 = Low Gas Pressure
							bit6 = Field Interlock
							bit7 = ARHL
19	S16	Read	Non-safety Chain Status	AI	19	Read	bit0 = Field Input 1
							bit1 = Field Input 2
20	S16	Read	Demand Source	AI	20	Read	0=None
							1=Anti-Short Cycle
							2=Service
							3=DHW
							4=Cascade
							5=External
							6=CH1
							7=CH2
							10=Anti-Frost
							11=Warm weather shutdown
21	S16	Read	Digital Output Status	AI	21	Read	bit0 = Run contact
							bit1 = Alarm Contact
							bit2 = DHW Pump
							bit3 = System Pump
							bit4 = Louver contact
							bit5 = Aux dry contact 1
							bit6 = Aux dry contact 2
							bit7 = Boiler pump
							bit8 = Aux powered contact
22	S16	Read	Gas and Pilot Valve Status	AI	22	Read	bit 0 = Burner 1 Pilot Gas valve
							bit 1 = Burner 1 Gas valve 1
23	S16	Read	0-10VDC (4-20mA) Output for Pump Speed	AI	23	Read	
24	S16	Read	0-10VDC (4-20mA) Output for Fan Speed	AI	24	Read	
27	S16	Read	Modulating Fan 1 - Speed	AI	27	Read	
33	S16	Read	Modulating Burner1 Firing rate	AI	33	Read	
35	S16	Read	Lockout code	AI	35	Read	FLOW SWITCH = 0
							LOW WATER CUT OFF ERROR = 1
							MANUAL RESET HIGH LIMIT = 2
							PRESSURE SWITCH = 3
							HIGH GAS PRESSURE SWITCH = 4
							LOW GAS PRESSURE SWITCH = 5
							FIELD INTERLOCK = 6
							SPARE SAFETY CHAIN = 7
							OUTLET PROBE LOCKOUT = 8
							OUTLET PROBE DRIFT = 9
							OUTLET PROBE HIGH LIMIT = 10
							FLUE PROBE LOCKOUT = 11
							FLUE PROBE DRIFT = 13
							FLUE PROBE HIGH LIMIT = 14
							INLET PROBE LOCKOUT = 15
							DELTA-T = 16
							GENERIC LOCKOUT = 17
							BURNER APS LOCKOUT = 18
							BURNER PARASITIC FLAME = 20
							BURNER MAX IGNITION ATTEMPTS = 22
							BURNER MAX FLAME LOSS = 24
							NO LOCKOUT = 255
36	S16	Read	Error Code	AI	36	Read	24 VDC ERROR = 30
							24 VAC ERROR = 31
							DHW PROBE ERROR = 32
							SYSTEM SUPPLY PROBE ERROR = 33
							SYSTEM RETURN PROBE ERROR = 34
							OUTDOOR PROBE ERROR = 35
							HIGH LIMIT AUTO ERROR = 41
							HIGH DELTA-T ERROR = 42
							FAN SPEED ERROR = 43
38	U16	Read	History - DHW Demand Cycles	AI	38	Read	
39	U16	Read	History - CH1 Demand Cycles	AI	39	Read	
40	U16	Read	History - CH2 Demand Cycles	AI	40	Read	
43	U16	Read	History - Cascade Demand Cycles	AI	43	Read	
44	U16	Read	History - Burner Stage 1 Cycles	AI	44	Read	

7.E Modbus and BACnet memory displays (continued)

Modbus Address	Type	R/W	Map Descriptor Name	BACnet Data Type	BACnet Object ID	Read/Write	Notes
48	U16	Read	History - Boiler Pump Cycles	AI	48	Read	
49	U16	Read	History - DHW Pump Cycles	AI	49	Read	
50	U16	Read	History - System Pump Cycles	AI	50	Read	
51	S16	Read	History - Average Boiler Outlet Temperature	AI	51	Read	
52	S16	Read	History - Maximum Boiler Outlet Temperature	AI	52	Read	
53	S16	Read	History - Minimum Boiler Outlet Temperature	AI	53	Read	
54	S16	Read	History - Boiler Average Firing Temperature	AI	54	Read	
55	U16	Read	History - Boiler Maximum Firing Time	AI	55	Read	
56	U16	Read	History - Boiler Minimum Firing Time	AI	56	Read	
64	S16	Read	Modulation sensor	AI	64	Read	0 = None 1 = Outlet 2 = DHW 3 = System 4 = Inlet 5 = Flue 6 = System Return
65	U16	Read	Lead Lag (Cascade) active service	AI	65	Read	
66	U16	Read	Lag 1 State	AI	66	Read	0 = Not Present 1 = Not Available 2 = Available 3 = Running 4 = Locked Out
67	U16	Read	Lag 1 Firing Rate	AI	67	Read	Current firing rate (0-100%)
68	U16	Read	Lag 2 State	AI	68	Read	0 = Not Present 1 = Not Available 2 = Available 3 = Running 4 = Locked Out
69	U16	Read	Lag 2 Firing Rate	AI	69	Read	Current firing rate (0-100%)
70	U16	Read	Lag 3 State	AI	70	Read	0 = Not Present 1 = Not Available 2 = Available 3 = Running 4 = Locked Out
71	U16	Read	Lag 3 Firing Rate	AI	71	Read	Current firing rate (0-100%)
72	U16	Read	Lag 4 State	AI	72	Read	0 = Not Present 1 = Not Available 2 = Available 3 = Running 4 = Locked Out
73	U16	Read	Lag 4 Firing Rate	AI	73	Read	Current firing rate (0-100%)
74	U16	Read	Lag 5 State	AI	74	Read	0 = Not Present 1 = Not Available 2 = Available 3 = Running 4 = Locked Out
75	U16	Read	Lag 5 Firing Rate	AI	75	Read	Ccrrent firing rate (0-100%)
76	U16	Read	Lag 6 State	AI	76	Read	0 = Not Present 1 = Not Available 2 = Available 3 = Running 4 = Locked Out
77	U16	Read	Lag 6 Firing Rate	AI	77	Read	Ccrrent firing rate (0-100%)
78	U16	Read	Lag 7 State	AI	78	Read	0 = Not Present 1 = Not Available 2 = Available 3 = Running 4 = Locked Out
79	U16	Read	Lag 7 Firing Rate	AI	79	Read	Current firing rate (0-100%)
80	U16	Read	Lead 0 State	AI	80	Read	0 = Not Present 1 = Not Available 2 = Available 3 = Running 4 = Locked Out
81	U16	Read	Lead 0 Firing Rate	AI	81	Read	Current firing rate (0-100%)
82	S16	Read	Lead Firing Rate	AI	82	Read	Current firing rate of the Cascade Lead (0-100%)
83	U16	Read	Active CH Setpoint	AI	83	Read	
84	U16	Read	Burner Status 1	AI	84	Read	0=None 5 = Start 24 = Error Block 160 = Standby 165 = Check Safety Swtich 166 = Run 177 = Prepurge Open 181 = Parameter Block 183 = Lockout 188 = Testmode 194 = Prepurge Closed 195 = Wait for HIS Free 196 = HIS Preheat/Prespark 200 = Verify Primary SF

Modbus Address	Type	R/W	Map Descriptor Name	BACnet Data Type	BACnet Object ID	Read/Write	Notes
							217 = interpurge
							241 = Postpurge
							245 = Trial for Ignition
							250 = Trial for Ignition Main
							52=Post Purge
89	U16	Read	Boiler Pump Status	AI	89	Read	
90	U16	Read	Cascade Master Heat Demand	AI	90	Read	
91	U16	Read	Burner 1 Run Time	AI	91	Read	
128	S16	Read/Write	CH1 Enable/Disable	AV	0	Read/Write	
129	S16	Read/Write	CH1 Set Point	AV	1	Read/Write	
130	S16	Read/Write	CH1 P	AV	2	Read/Write	
131	S16	Read/Write	CH1 I	AV	3	Read/Write	
132	S16	Read/Write	CH1 D	AV	4	Read/Write	
133	S16	Read/Write	CH2 Enable/Disable	AV	5	Read/Write	
134	S16	Read/Write	CH2 Set Point	AV	6	Read/Write	
135	S16	Read/Write	CH2 P	AV	7	Read/Write	
136	S16	Read/Write	CH2 I	AV	8	Read/Write	
137	S16	Read/Write	CH2 D	AV	9	Read/Write	
148	S16	Read/Write	DHW Enable/Disable	AV	20	Read/Write	
149	S16	Read/Write	DHW Set Point	AV	21	Read/Write	
150	S16	Read/Write	DHW P	AV	22	Read/Write	
151	S16	Read/Write	DHW I	AV	23	Read/Write	
152	S16	Read/Write	DHW D	AV	24	Read/Write	
155	S16	Read/Write	Cascade CH Set Point	AV	27	Read/Write	
156	S16	Read/Write	Cascade CH P	AV	28	Read/Write	
157	S16	Read/Write	Cascade CH I	AV	29	Read/Write	
158	S16	Read/Write	Cascade CH D	AV	30	Read/Write	
163	S16	Read/Write	Hybrid Set Point	AV	35	Read/Write	
164	S16	Read/Write	Hybrid Differential Temperature	AV	36	Read/Write	
165	S16	Read/Write	Vari-Prime P - Proportional Term	AV	37	Read/Write	
166	S16	Read/Write	Vari-Prime I - Integral Term	AV	38	Read/Write	
167	S16	Read/Write	Vari-Prime D - Derivative Term	AV	39	Read/Write	
168	S16	Read/Write	Vari-Prime Delta T	AV	40	Read/Write	
174	S16	Read/Write	DHW Demand switch	BV	0	Read/Write	0 = No Heat Demand; 1 = Heat Demand
175	S16	Read/Write	CH 1 Demand switch	BV	1	Read/Write	0 = No Heat Demand; 1 = Heat Demand
176	S16	Read/Write	CH 2 Demand switch	BV	2	Read/Write	0 = No Heat Demand; 1 = Heat Demand
179	S16	Read/Write	Modbus Parameter Write Enable				

7.F Wiring Diagrams

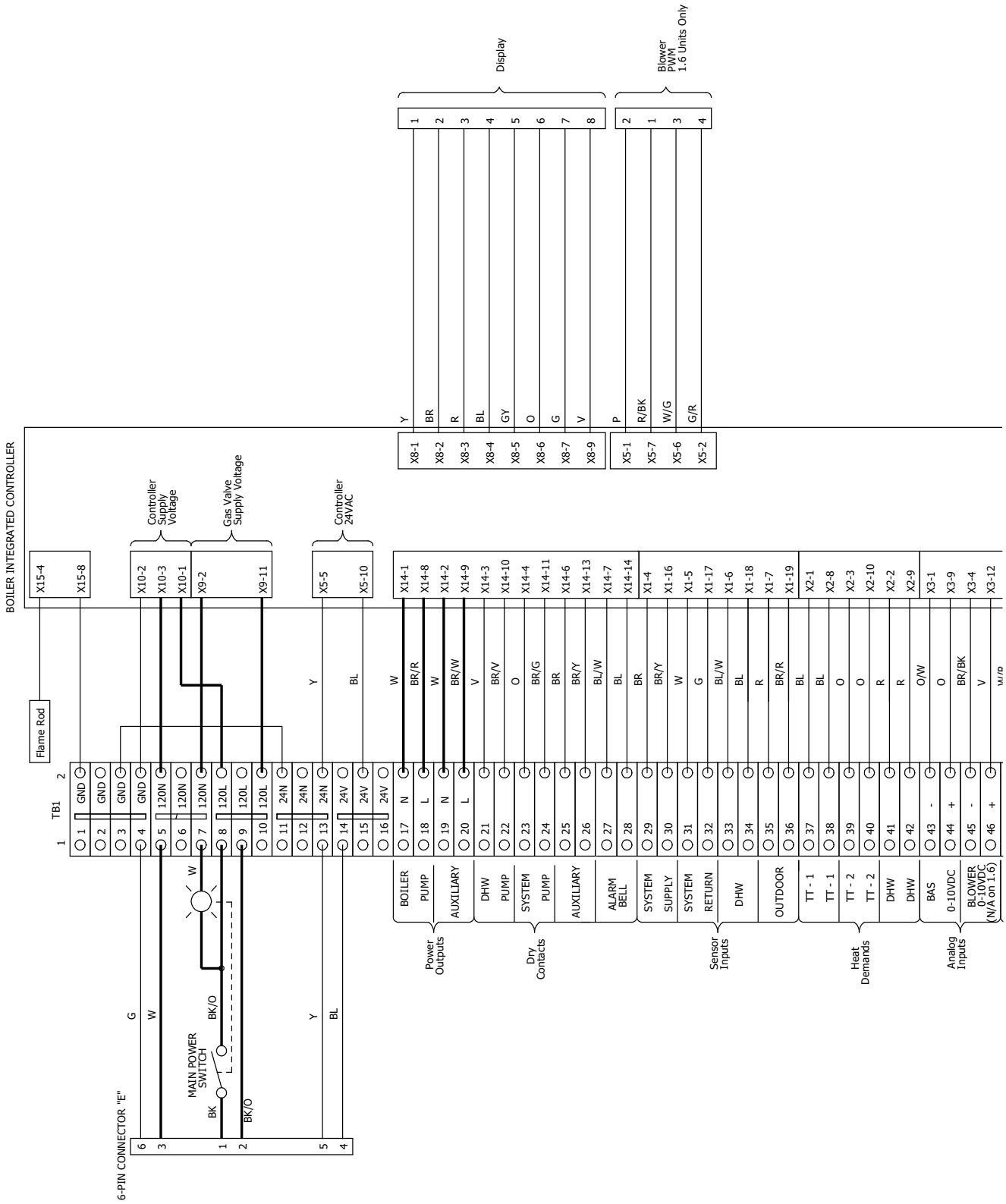

Figure 22. Wiring Diagram, model 1600 Page 1 of 2

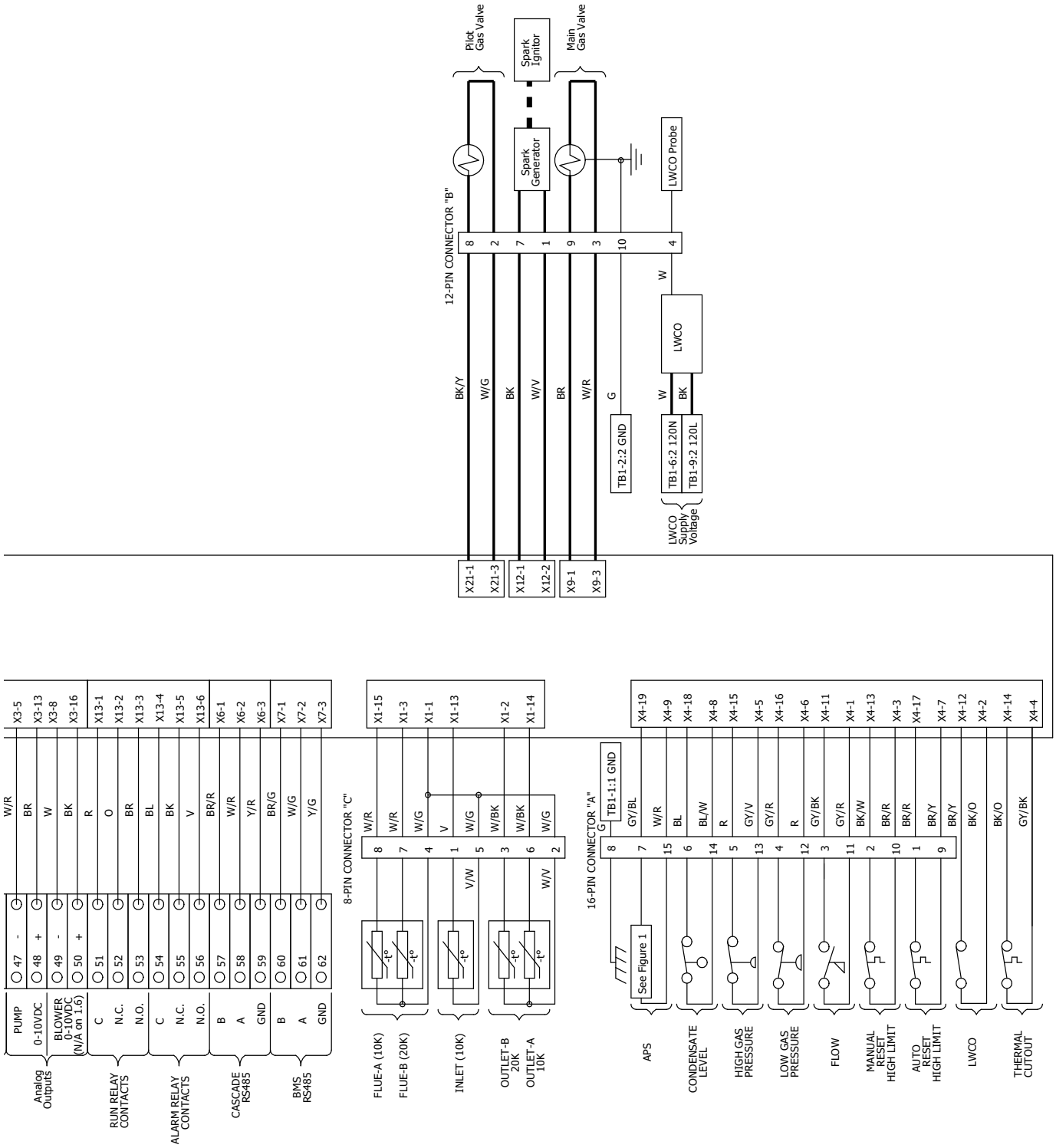

Figure 1

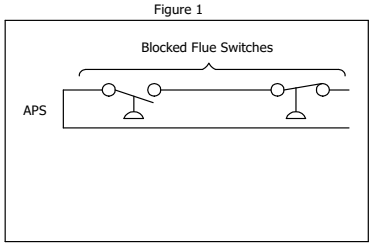

Wire Color Legend	
Black	BK
Blue	BL
Brown	BR
Green	G
Grey	GY
Orange	O
Pink	P
Red	R
White	W
Violet	V
Yellow	Y

Wire Voltage Legend	
Low Voltage	
120VAC	
High Voltage	

Wiring diagram is located on the inside front panel.

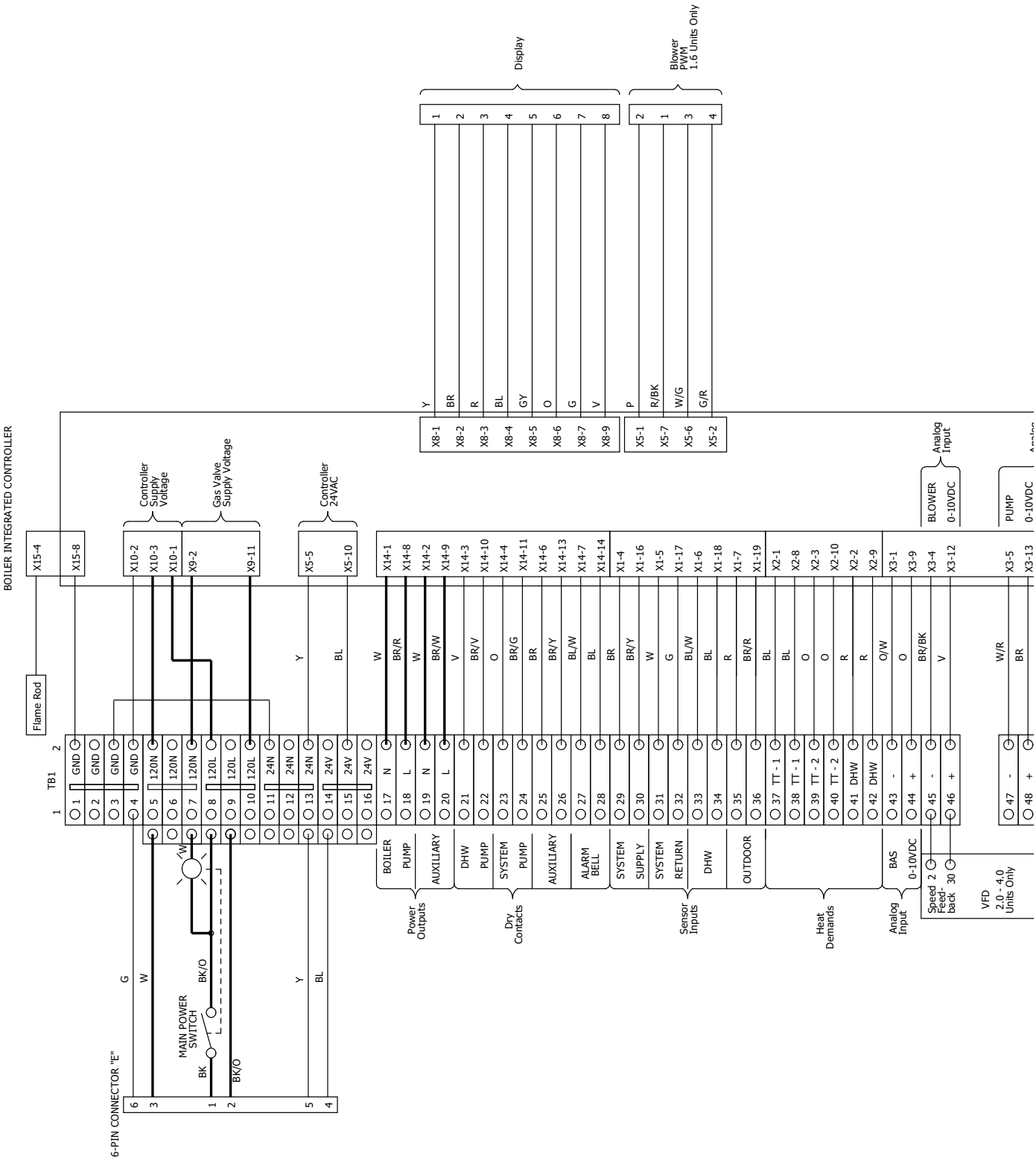

Figure 23. Wiring Diagram, Models 2000 to 4000

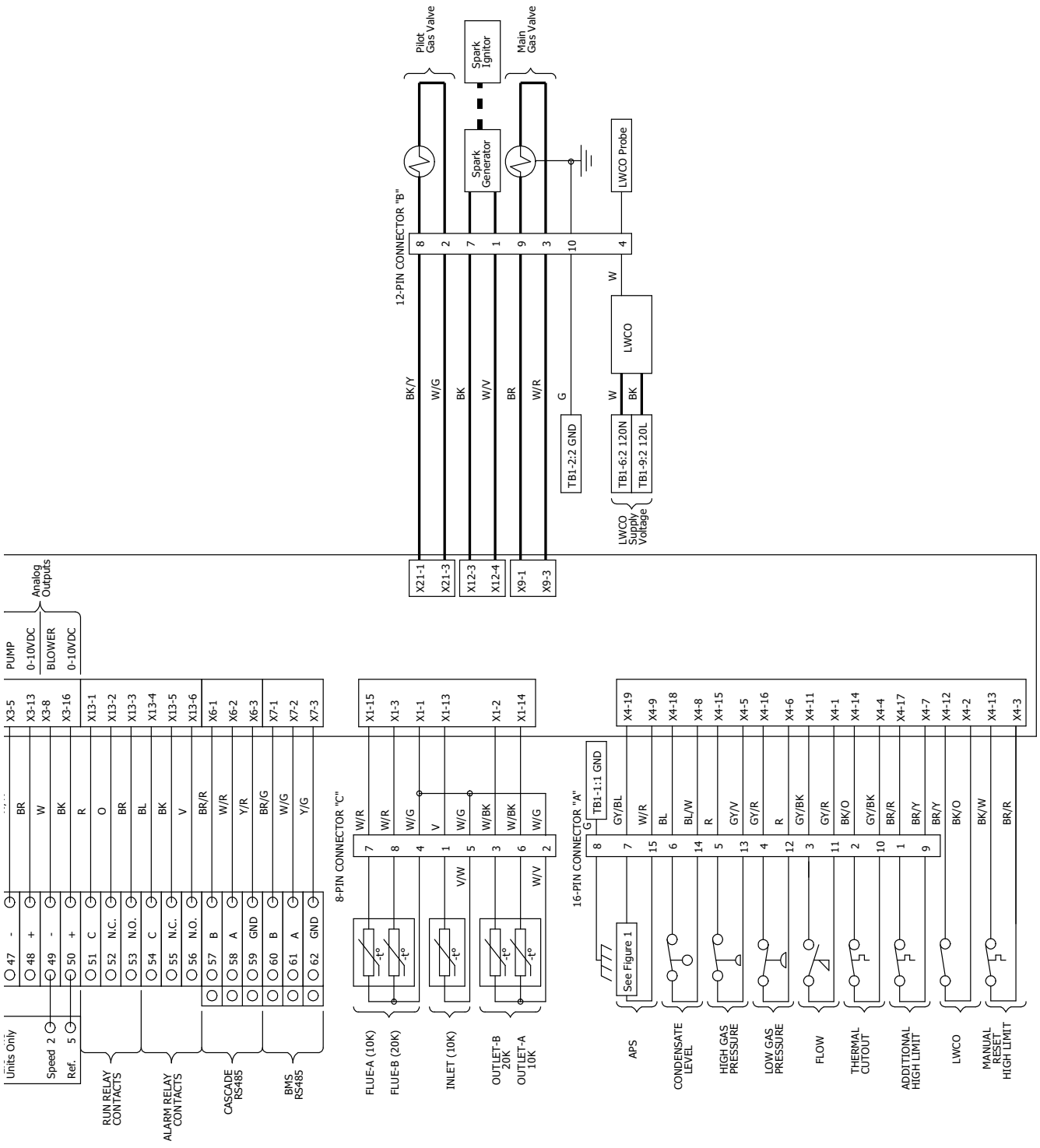

Figure 1

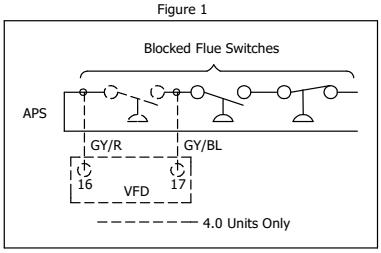

Wire Color Legend	
Black	BK
Blue	BL
Brown	BR
Green	G
Grey	GY
Orange	O
Pink	P
Red	R
White	W
Violet	V
Yellow	Y

Wire Voltage Legend	
Low Voltage	
120VAC	
High Voltage	

Wiring diagram is located on the inside front panel.

7.G High Voltage Wiring Diagrams

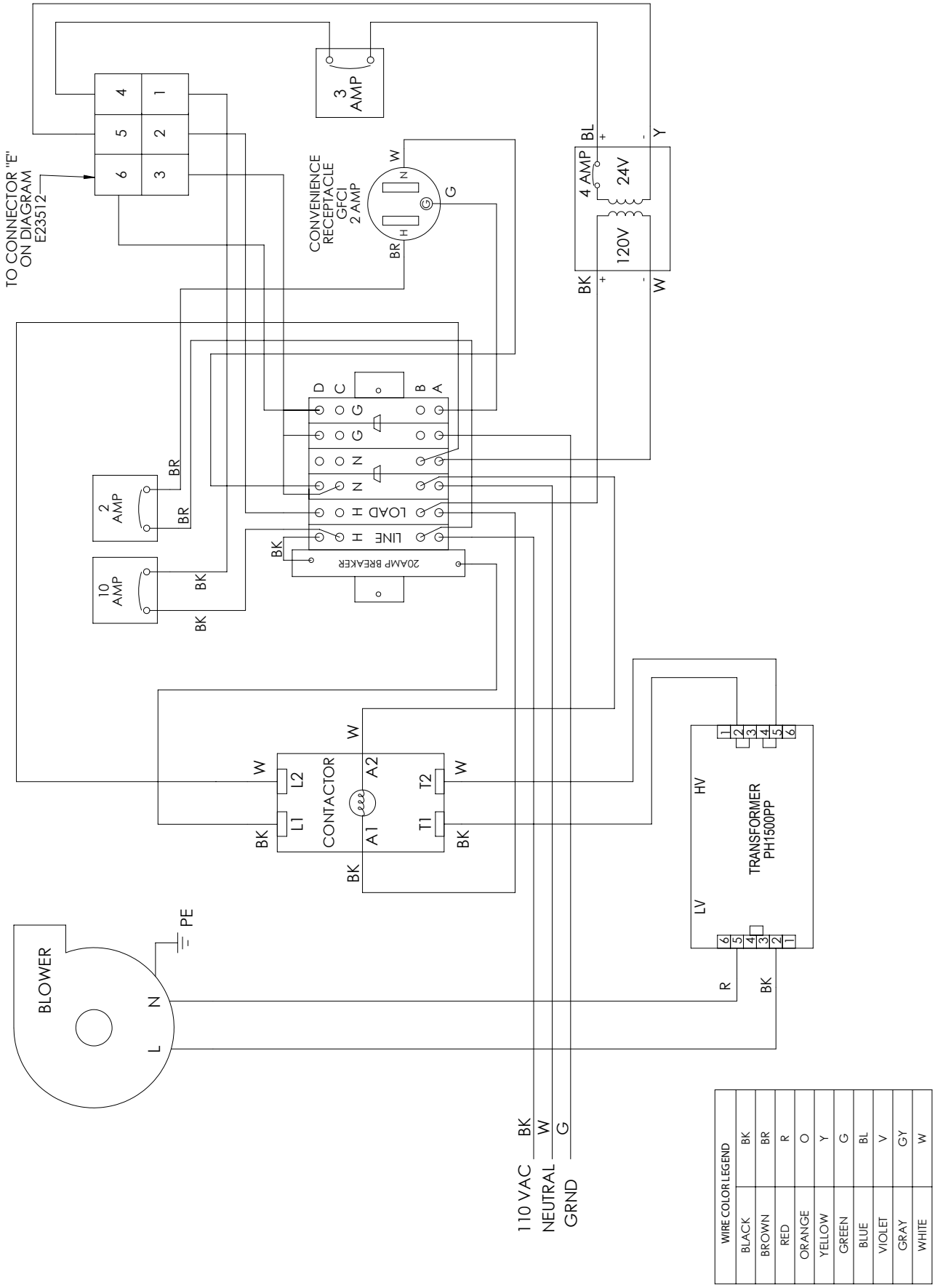

Figure 24. High Voltage Wiring Diagram Model 1600, 120V

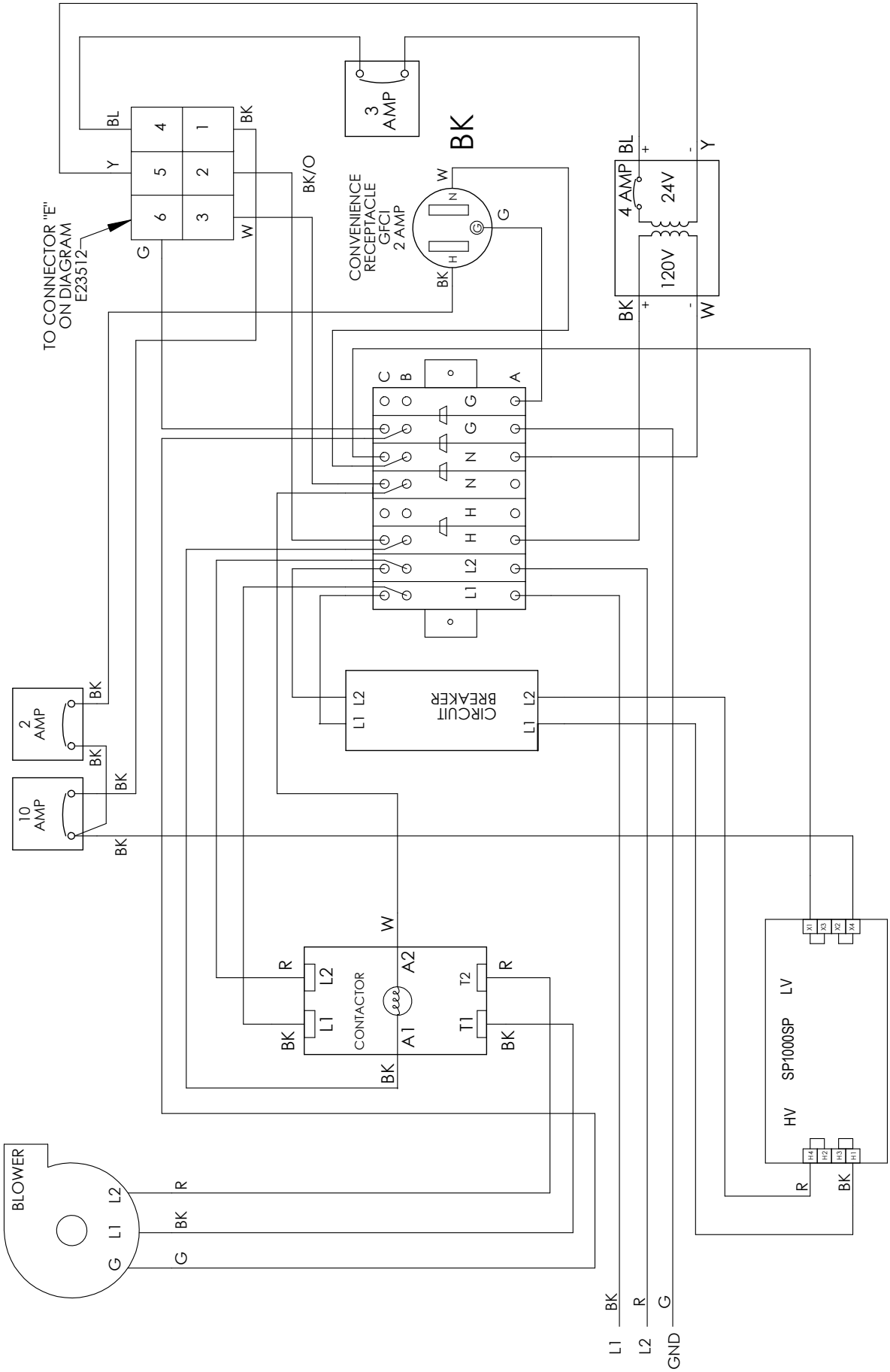

Figure 25. High Voltage Wiring Diagram Model 1600, 208V Single Phase

7.J High Voltage Wiring Diagrams (continued)

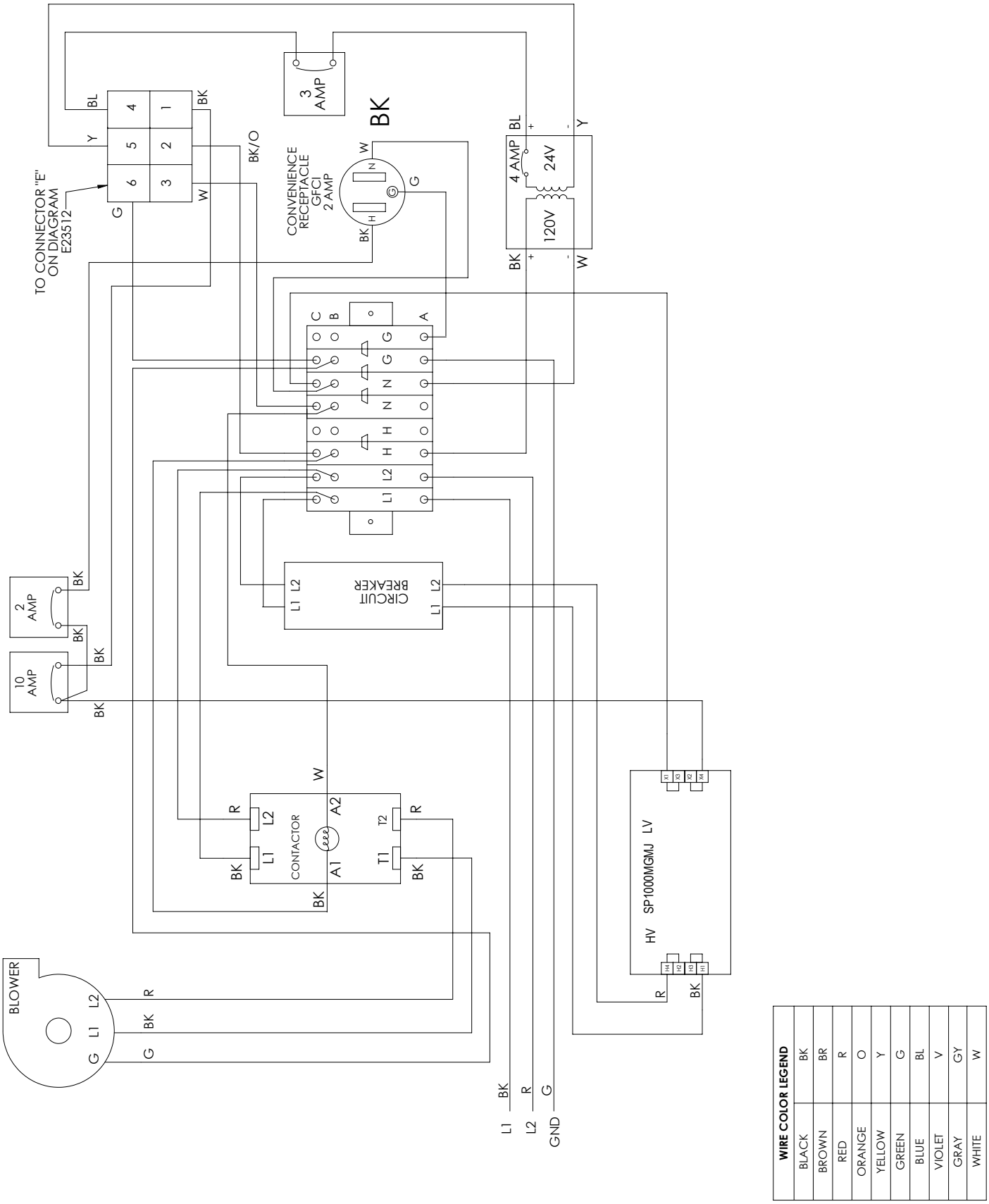

Figure 26. High Voltage Wiring Diagram Model 1600, 220V / 240V Single Phase

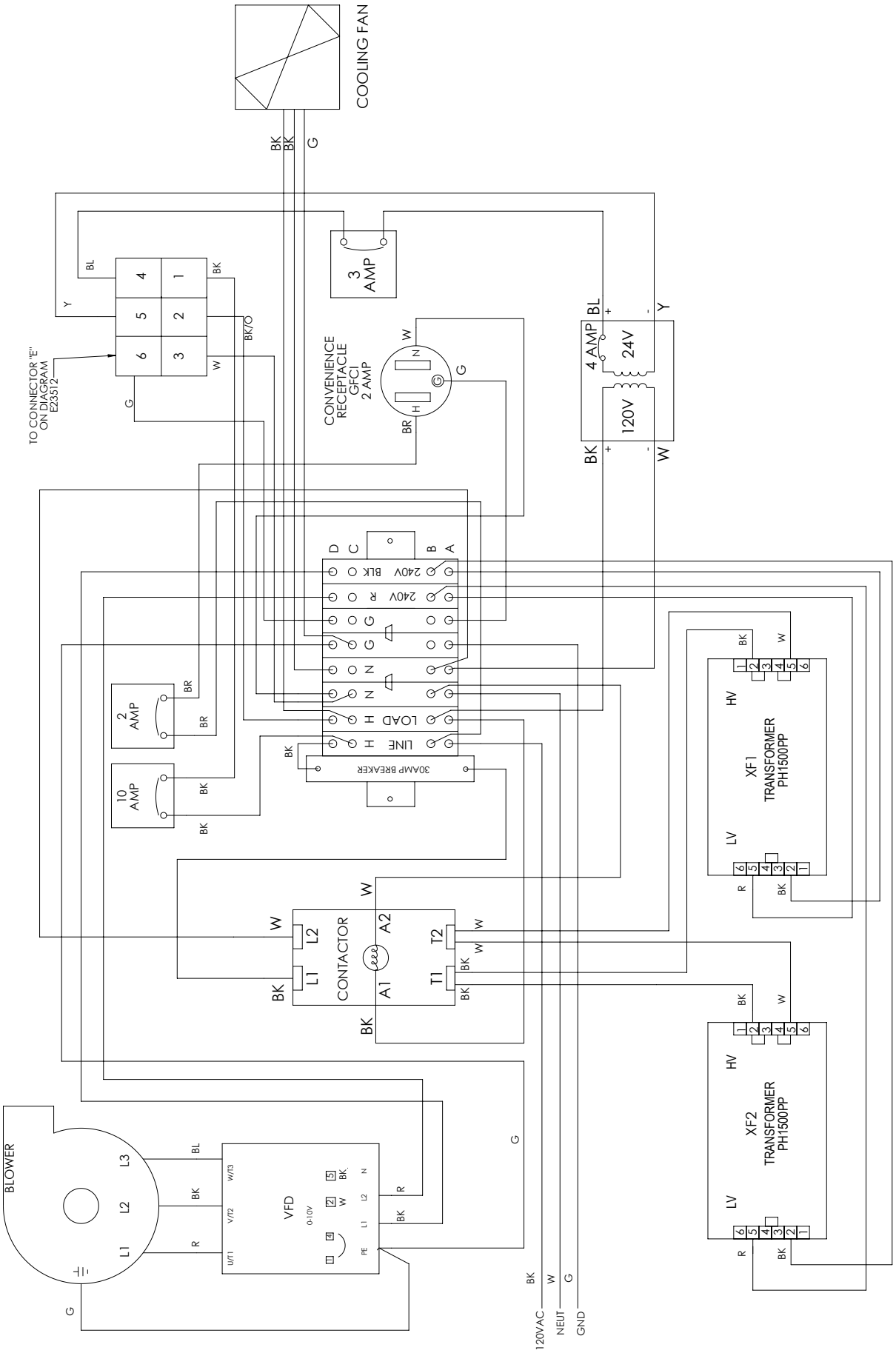

Figure 27. High Voltage Wiring Diagram Model 2000, 120V

7.J High Voltage Wiring Diagrams (continued)

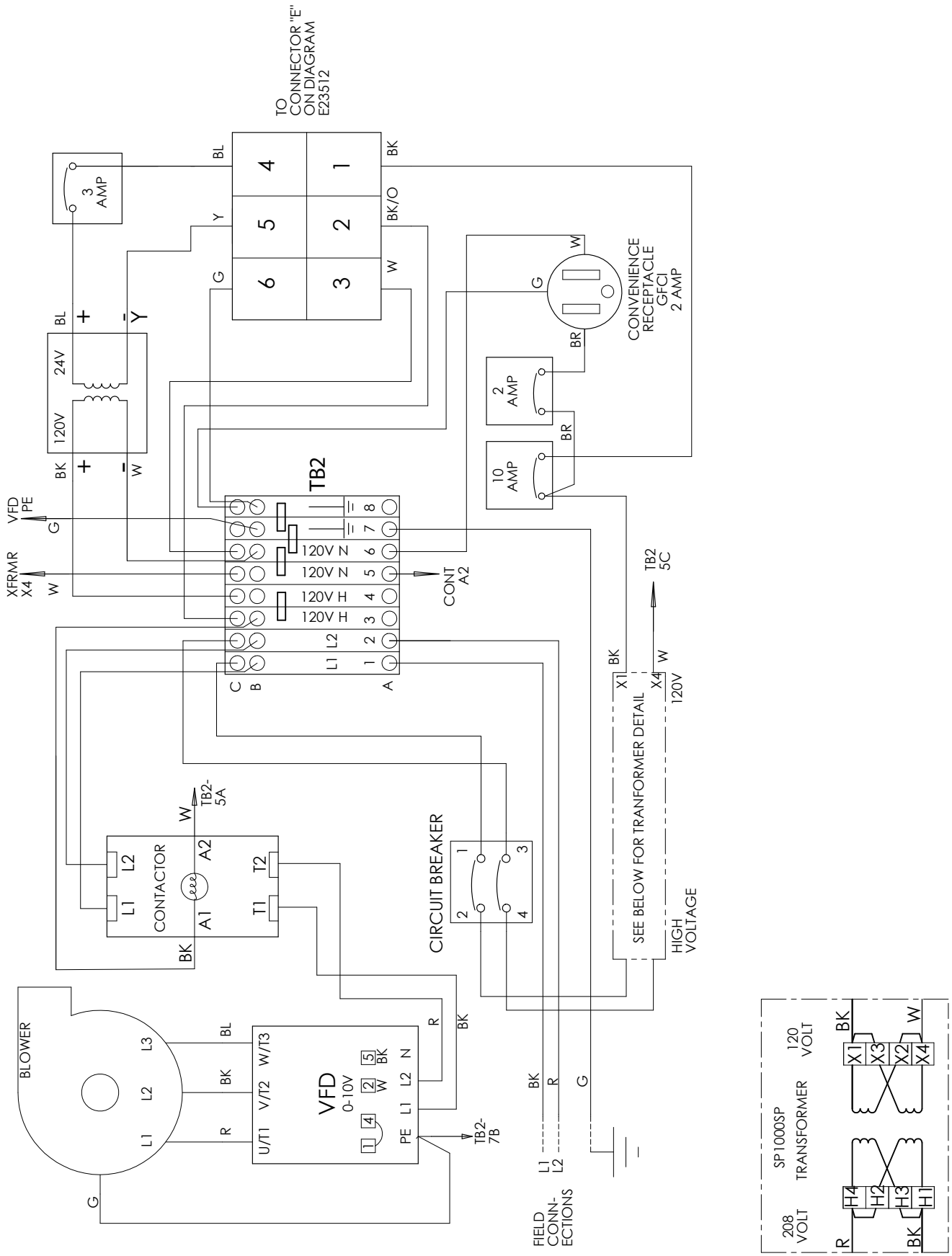

Figure 28. High Voltage Wiring Diagram Model 2000, 208V Single Phase

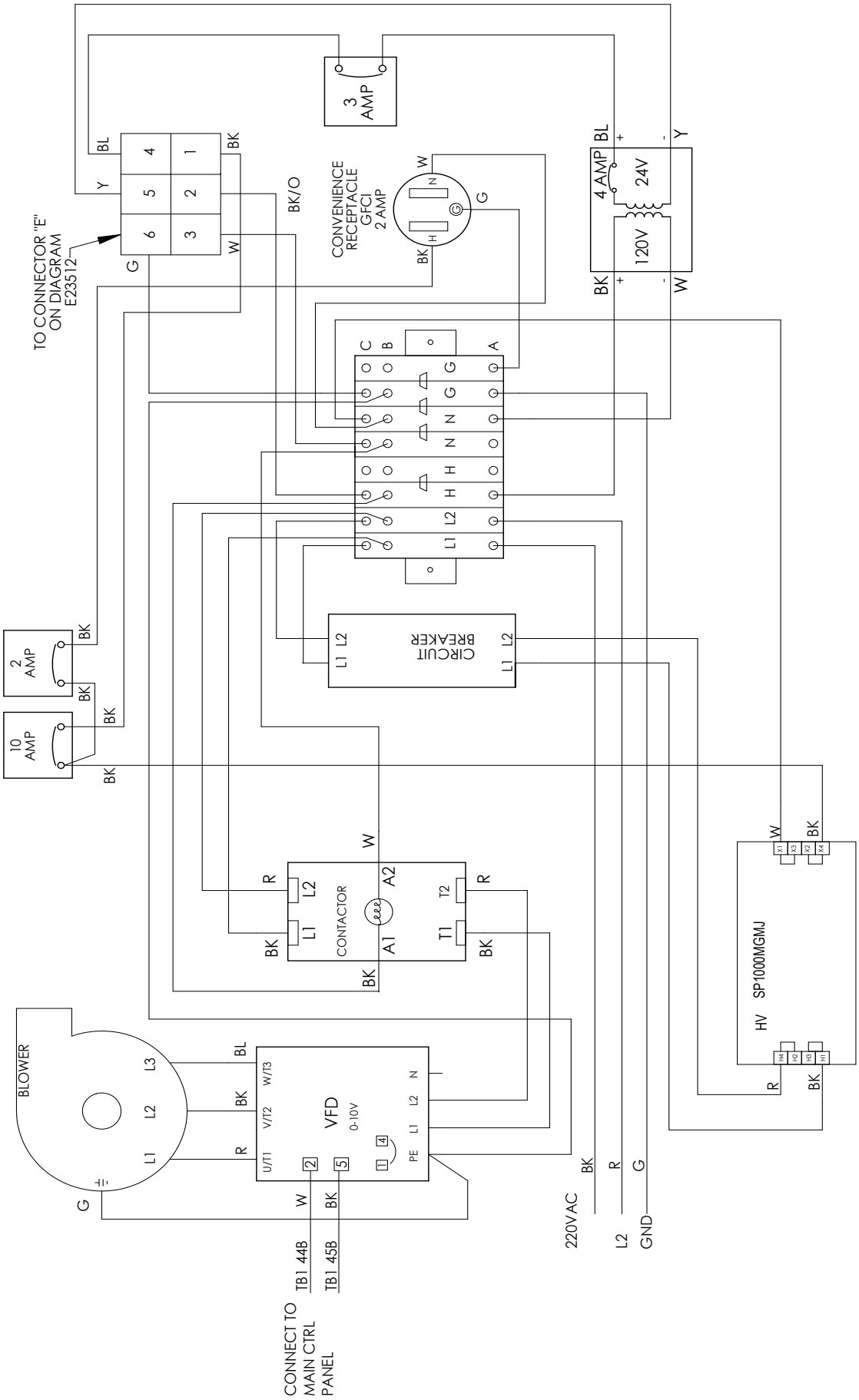

Figure 29. High Voltage Wiring Diagram Model 2000, 220V / 240V Single Phase

7.J High Voltage Wiring Diagrams (continued)

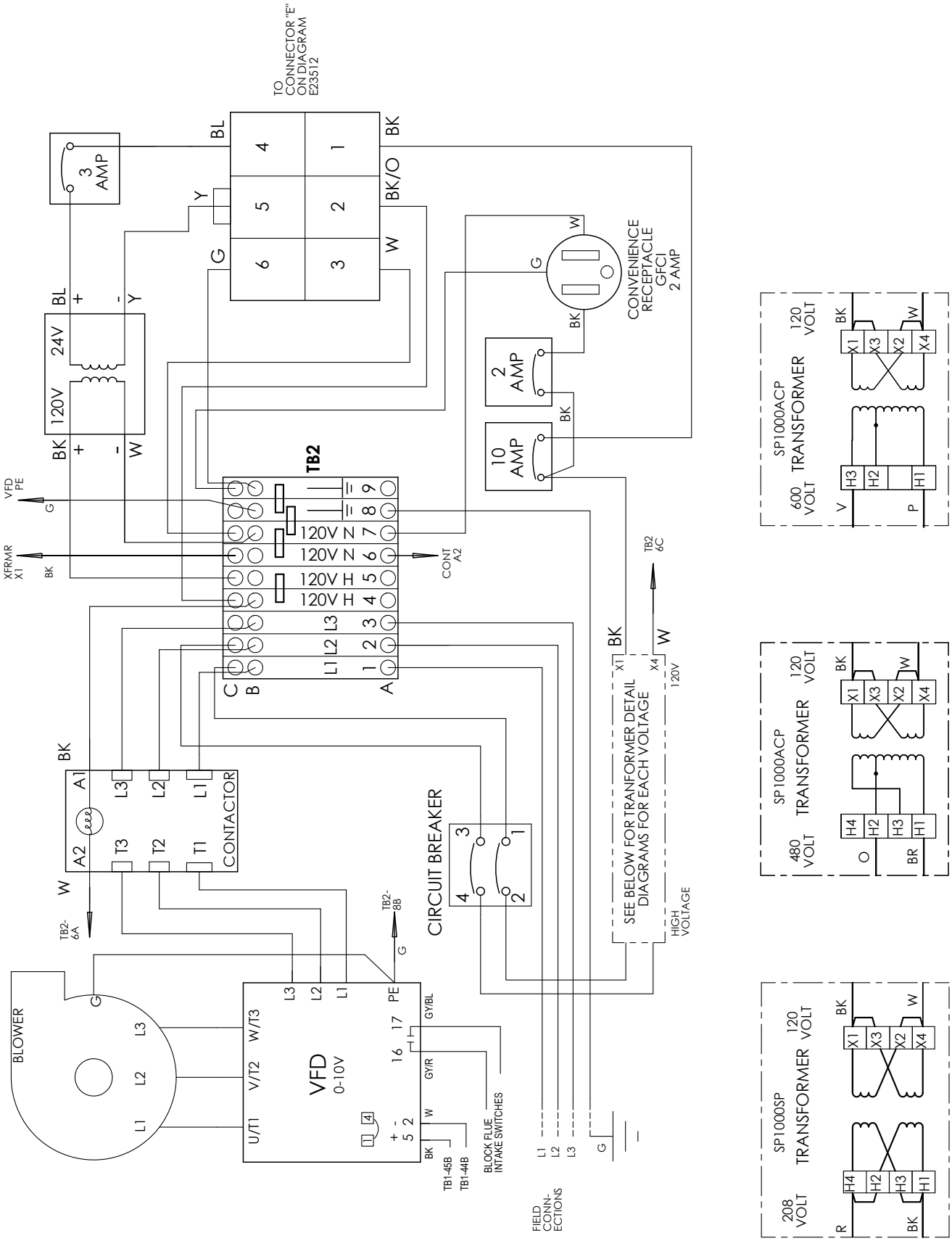

Figure 30. High Voltage Wiring Diagram Model 2000 - 4000 Three Phase

7.H Ladder Diagrams

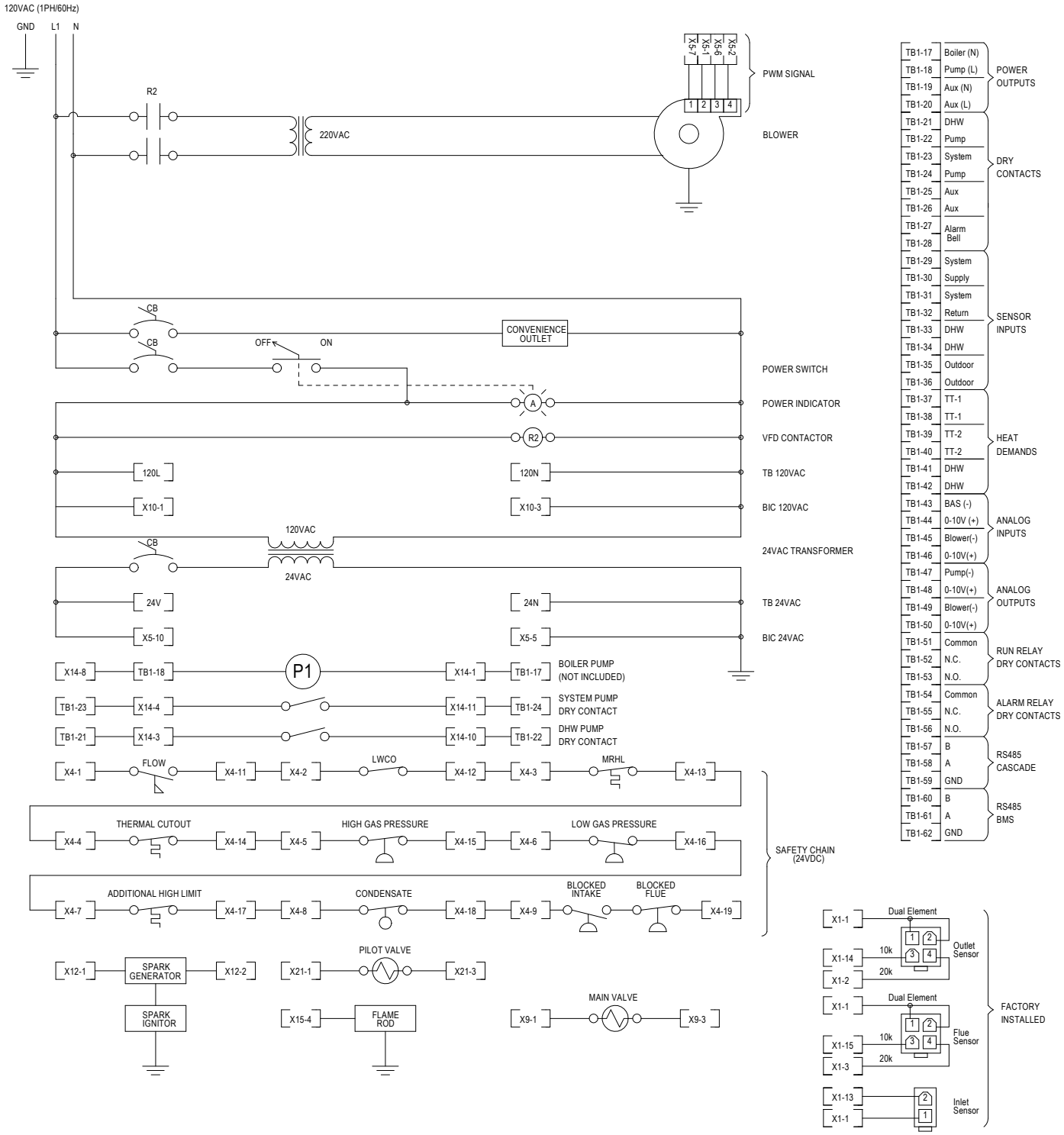

Figure 31. Ladder diagram, 120V, Single Phase.

7.K Ladder Diagrams (continued)

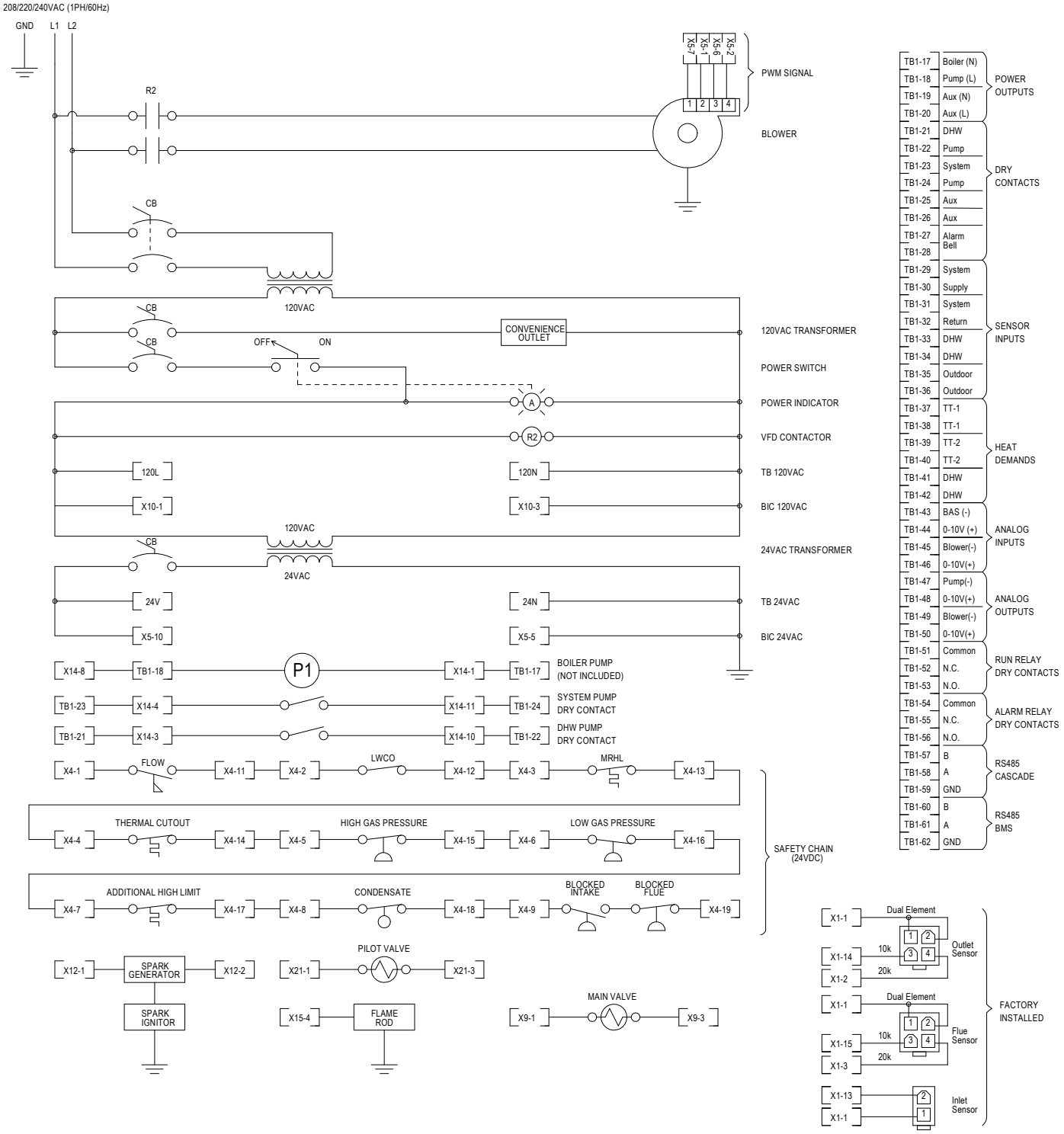

Figure 32. Ladder diagram, 220V, Single Phase.

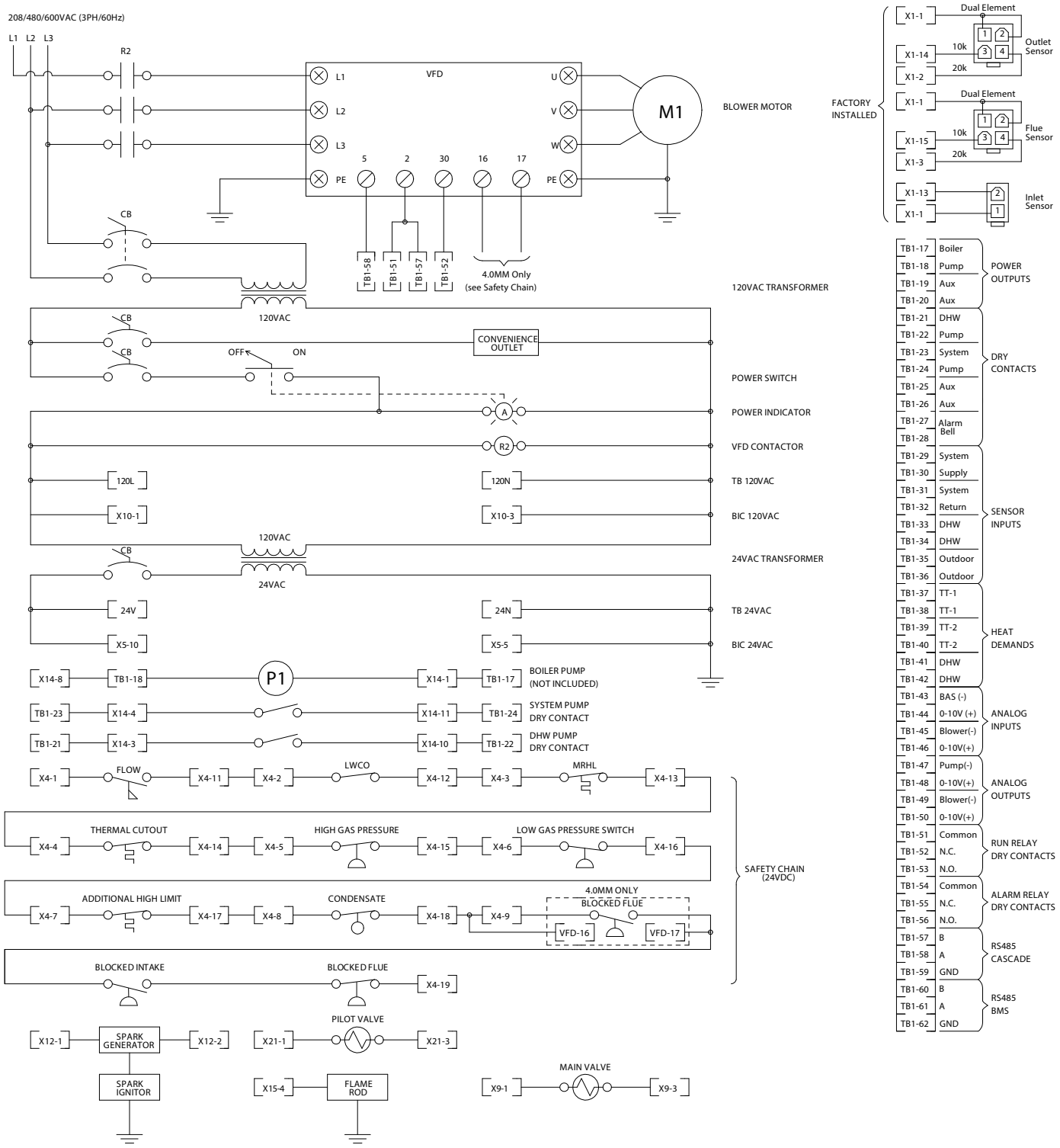

Figure 33. Ladder diagram, 208V, 480V, 600V, Three Phase

SECTION 8 Control Operation

8.A The Home Screen

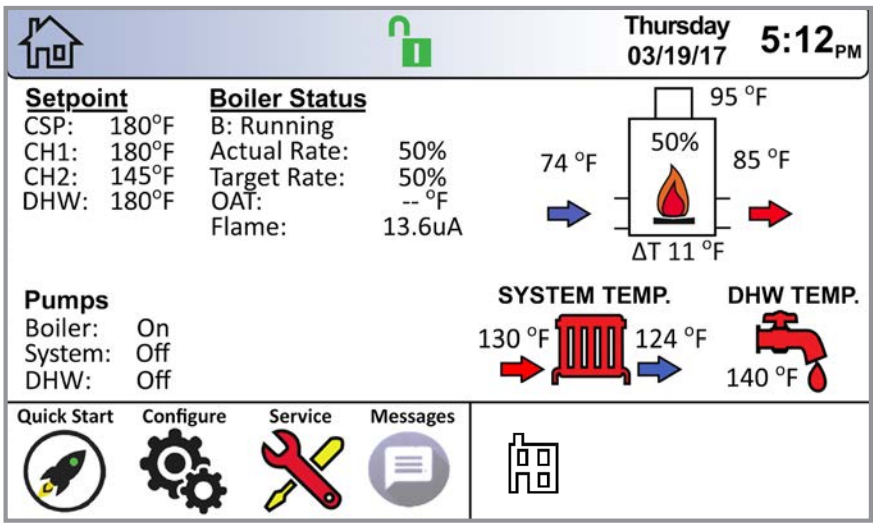

8.A.1 Home Screen Active Icons

Name	Icon	Description
Security		Displays the current lock status icon. Touch the lock icon to lock or unlock the Touchscreen Display. See **Section 8.B on page 60**
Quick Start		Provides quick access to the most commonly used parameters for easy installation. See **Section 8.C on page 61**
Configure		Provices access to ALL of your configurations for a detailed setup of the unit. See **Section 8.D on page 65**
Service		Allows the service technician to access the basic diagnostic and troubleshooting information. See **Section 8.E on page 92**
Messages		Will show an 'Exclamation Point' when there is a message. Clicking onto the Message icon will take you to the message itself. The USB functionality will show the USB Icon at this location, if being used. See **Section 8.F on page 97**
Active Demands		Will show icons that indicate the active parameters that are currently in demand. **See Section 8.G on page 98**
Navigation Bar		Top left of every menu. The constant indicator of where you are as you navigate into and out of the touchscreens. **See Section 8.A.2 on page 59** **The alarm bell icon indicates that the units alarm has been silenced.** **LOCKOUTS and ERROR** Codes are also show in the ***Navigation Bar*** when there is one of several unit Lockouts, Errors or Shut-downs that have occured. **SECTION 12 on page 116** **Lockout: Outlet Probe High Limit** **RESET**
Date & Time	Thursday 03/19/17 5:12PM	To change date and time, simply touch the date or time and follow the directions. **Section 8.D.10 on page 85**

Figure 34. Active Areas of the Home Screen

8.A.2 Keypad Operations

NOTE: You can always tell exactly where you have navigated to by looking at the icons in the ***Navigation Bar.***

In this example you are in
Home / Configure / Central Heat / Central Heat One

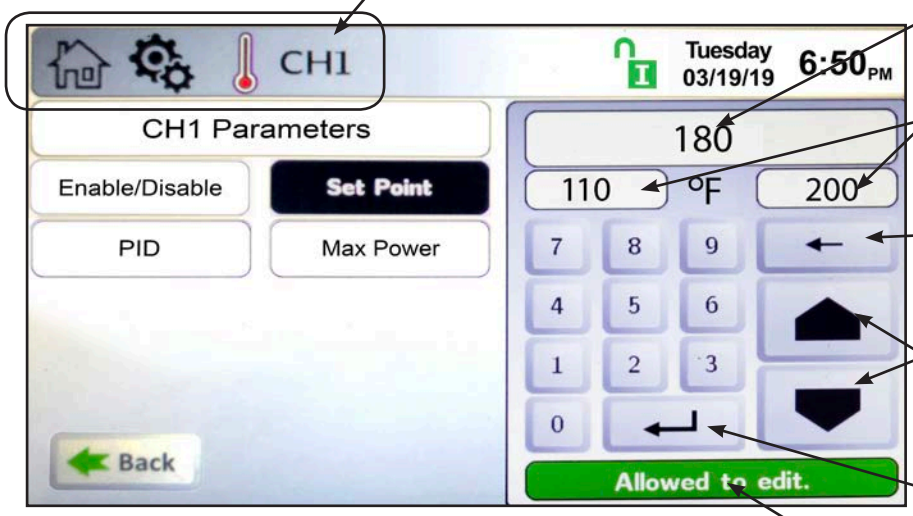

A Typical Numeric Keypad Entry Screen.

Shows the current setting of the Parameter.

These windows will reflect the allowable ranges of the parameter

To delete the current setting before entering in the new value.

"Up and Down" arrows are used to increment the setting accordingly.

The "Enter" button is used to accept the new value.

This is the indicator that will be shown when the correct password has been entered to allow the setting to change.

Remember to always save the new setting with the button.

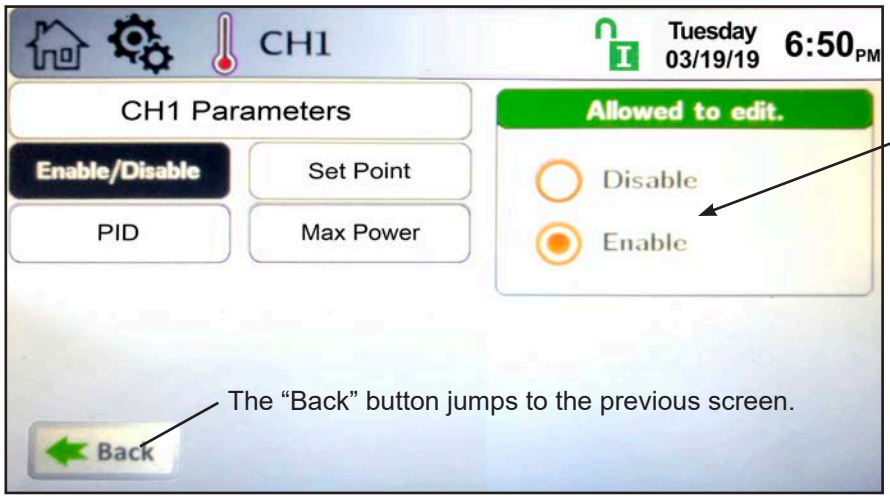

The highlighted button (orange) shows which one is selected. Some screens may only allow you to set one or the other, while some other screens (example: pump selection) will allow you to select any or all of the options.

The "Back" button jumps to the previous screen.

A Typical Selection Screen.

8.B Login to Lock / Unlock the Display Screen

Password Protection:

To change configuration or parameters, a password is required. The control system includes three levels of password protection. Touch the 'Current Lock Status' icon at the top of the screen.

1- USER password is lhs. This password is for 'Safe' access 'Non-Critical' adjustments and functions. Use this password if you want to make adjustments without fear of altering the critical configuration of the system. When unlocked in the User mode, the icon will change to

2- INSTALLER password is 17. This password is for the trained Installer / Technician for configuration and parameter changes made during the initial setup and commissioning. Be aware that in this level of password protection, changes to the configuration setup may result in lock-outs or conflicts with your system setup, resulting in technical issues.
When unlocked in the Installer mode, the icon will change to

3- OEM: Configuration and parameter changes available only to the factory. When unlocked in the OEM mode, the icon willchange to

Logout. If the Installer is done and wants to lock the display immediately, tap the Logout icon to exit Installer or User Mode. Exiting the Installer or User Mode will lock the unit.

Walk-Away Result. The user can choose how long the control will remain unlocked after interaction with the control has stopped. After this time (default is 5 minutes), the screen will lock itself.
See "8.E.4 Screen Settings Timeout" on page 95

8.C Quick Start

Quick Start will allow a user to configure the BASIC functionality of the control, without going through all of the parameters that are available.

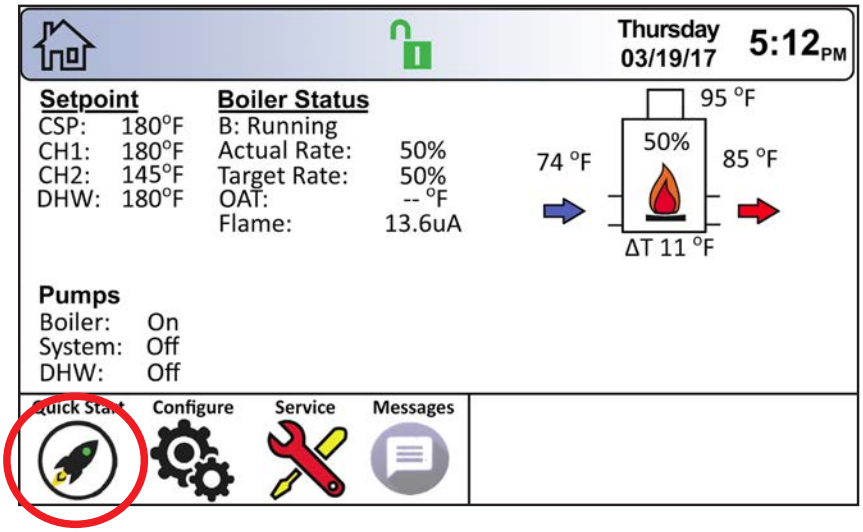

The 6 BASIC functionalites are

- **Central Heat,**
- **Domestic Hot Water,**
- **Outdoor Reset,**
- **Warm Weather Shutdown,**
- **Anti-short Cycle**

` and

- **Time & Date**

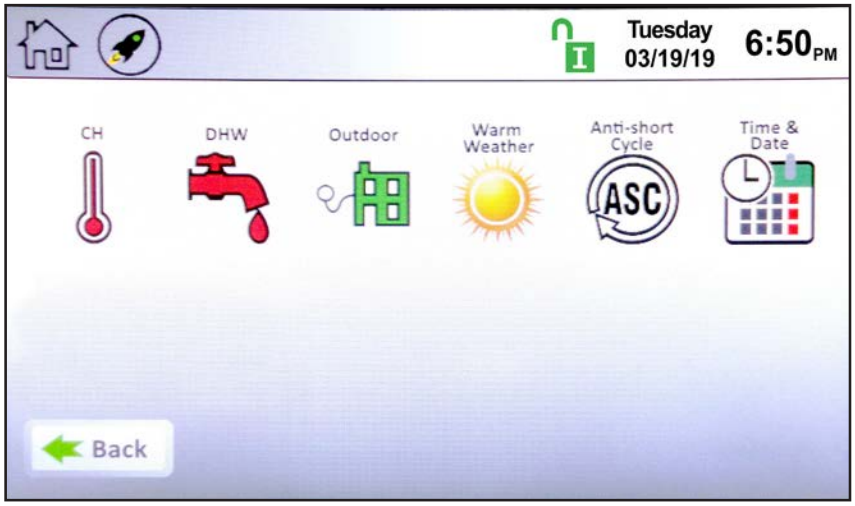

8.C.1 CH (Central Heat)

”CH” stands for “Central Heat.” It is used for space heating demands. On the Quick Start Screen, touch the CH thermometer icon to navigate to the CH Selection Screen

There are two identical heat demands, CH1 and CH2, each with independent control algorithms and independent inputs on the input terminal strip, see “8.D Configuration” on page 65

Touching CH1 navigates to the CH1 Quick Start Screen

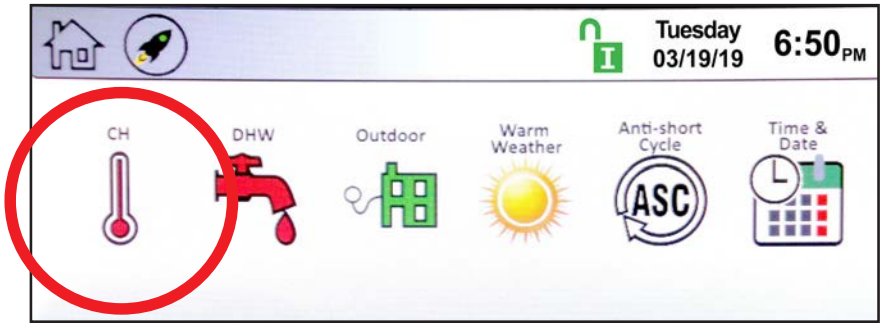

8.C.1.a CH1 (Central Heat, One)

• **Enable/Disable** – This allows CH1 to be enabled/disabled. The default setting is Enabled.
• **Set Point** – This is the set point temperature.

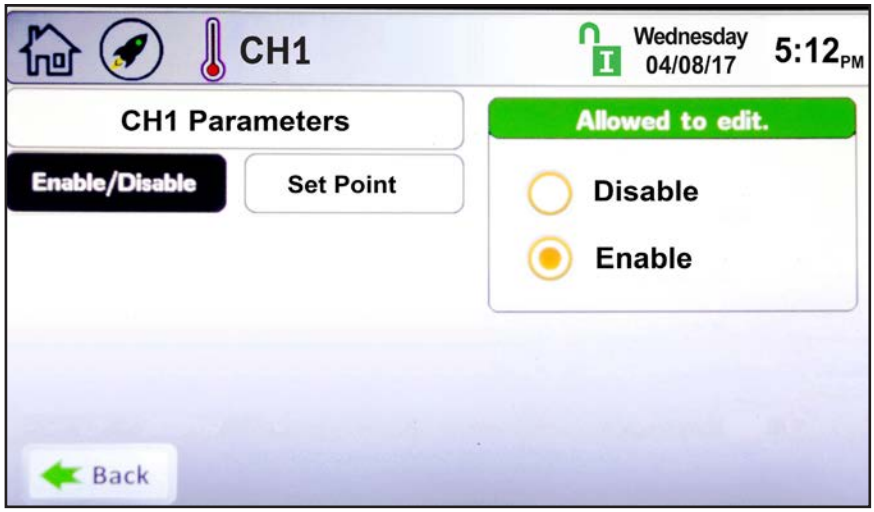

8.C.1.b CH2 (Central Heat, Two)

To navigate to the CH2 Quick Start Screen, touch the CH2 Icon on the CH Quick Start Selection Screen. The CH2 screen will be have the same look and functionality as the CH1 Screen.

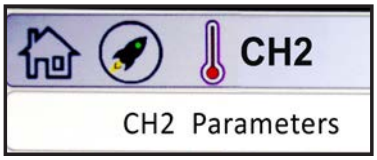

8.C.2 DHW (Domestic Hot Water)

"DHW" stands for "domestic hot water." To navigate to the DHW Quick Start Screen, touch the DHW icon on the Quick Start Screen.

The DHW Quick Start Screen allows adjustment of the following parameters:

• **Enable/Disable** – This allows DHW to be enabled/disabled. The default setting is Enabled.
• **Set Point** – This is the hot water set point temperature.

NOTE: A DHW heat demand can be initiated by an aquastat or sensor. See 7.D.3 on page 38

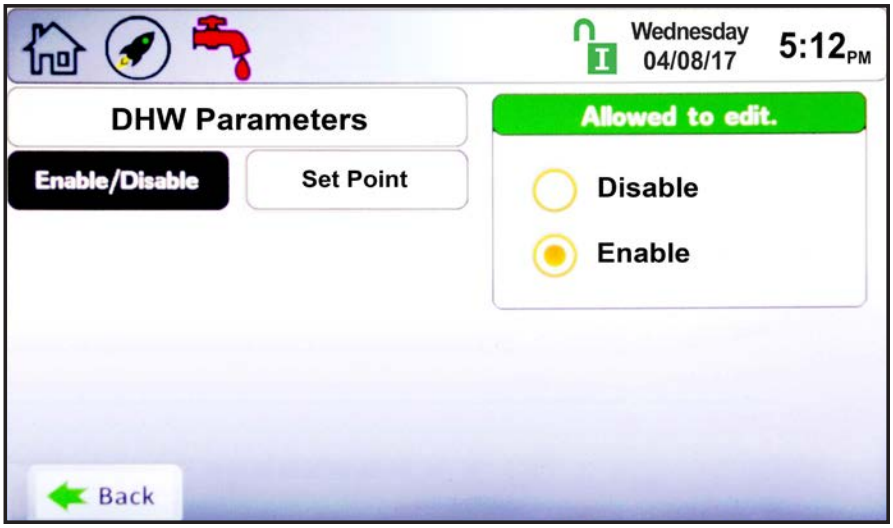

8.C.3 Outdoor Reset

Outdoor reset adjusts a boiler's setpoint based on outdoor air temperature. This is for boilers only, and is not used for domestic water.

To navigate to the Outdoor Quick Start Screen, touch the Outdoor Icon on the Quick Start Screen.

The Outdoor Quick Start Screen allows the adjustment of the following parameters:

- **Enable/Disable** – Enables and disables the outdoor reset functionality.
- **Maximum Outdoor Temperature** – The outdoor temperature at which the unit will use the minimum water temperature as the set point.
- **Minimum Outdoor Temperature** – The outdoor temperature at which the unit will use the maximum water temperature as the set point.
- **Maximum Water Temperature** – The maximum boiler outlet temperature based on the Minimum Outdoor Temperature.
- **Minimum Water Temperature** – The minimum boiler outlet temperature based on the Maximum Outdoor Temperature.

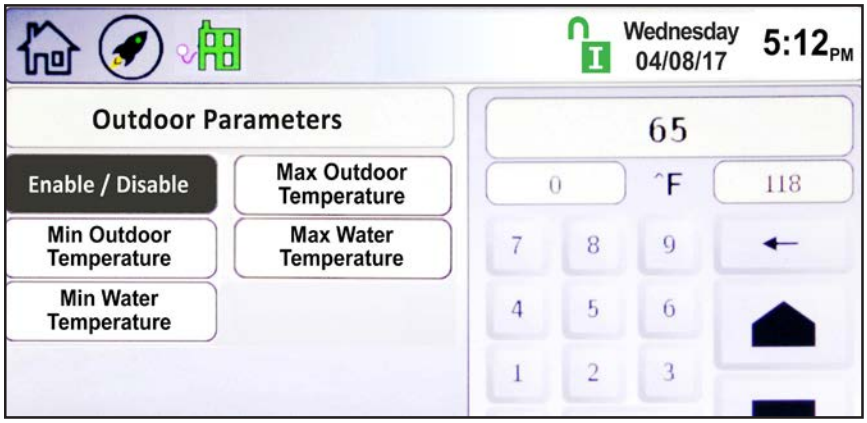

8.C.4 Warm Weather Shut Down

Warm weather shut down allows the user to disable to heating system based on outside air temperature. It is used for boilers only.

To navigate to the Warm Weather Quick Start Screen, touch the Warm Weather Icon on the Quick Start Screen.

The Warm Weather Quick Start Screen allows adjustment of the following parameters:

- **Temp Min** – If the unit is in warm weather shutdown mode, it will resume normal operation when the air temperature drops to this value.
- **Temp Max** – The temperature at which the warm weather shutdown condition will occur.
- **Feature Options** – This allows the shutdown to be enabled or disabled. When enabled, and the outside air temperature rises to the shut down (temp max) value, this tells the controller whether to shut down immediately or satisfy the current call for heat before shutting down.

8.C.5 Anti-Short Cycle

To navigate to the Anti-Short Cycle Quick Start Screen, touch the Anti-Short Cycle Icon on the Quick Start Screen.

The Anti-Short Cycle Quick Start Screen allows adjustment of the following parameter:

- **Cycle Time** – The amount of time after a heat demand is satisfied that the unit will wait to satisfy the next active heat demand.

NOTE: Anti-Short Cycle Time does not apply to DHW heat demands.

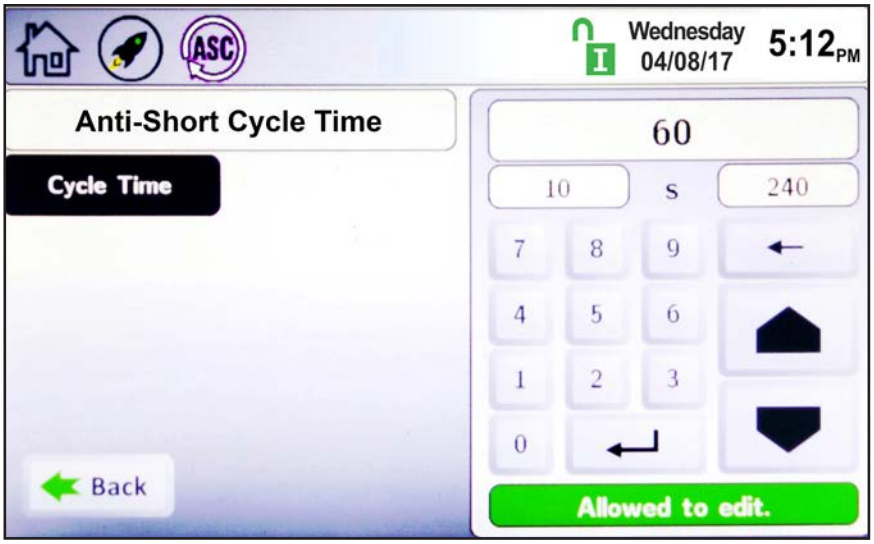

8.C.6 Time & Date

To navigate to the Time & Date Quick Start Screen, touch the Time & Date area on any screen.

NOTE: The Time is set in a 24 hour parameter, but displays only as a 12 hour clock with the AM / PM automatically added.

The Time & Date Quick Start Screen allows adjustment of the following parameters:

- **Hour**
- **Minute**
- **Month**
- **Day**
- **Year**

8.D Configuration

This area of the controller allows access to all parameters available, based on the access level that is unlocked.
To navigate to the Configuration Screen, touch the Configure Icon in the lower left portion of the Home Screen.

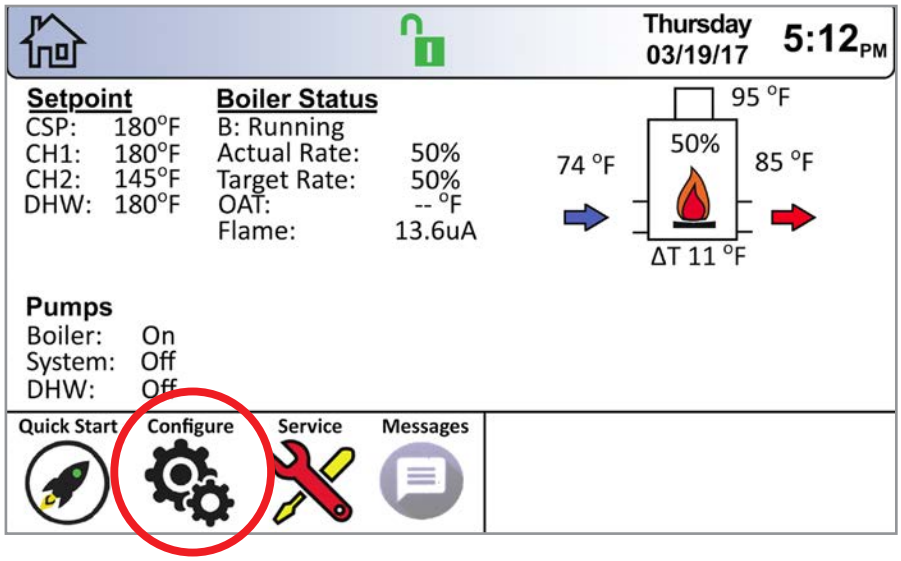

The Configuration Screen shows all configurable parameters.

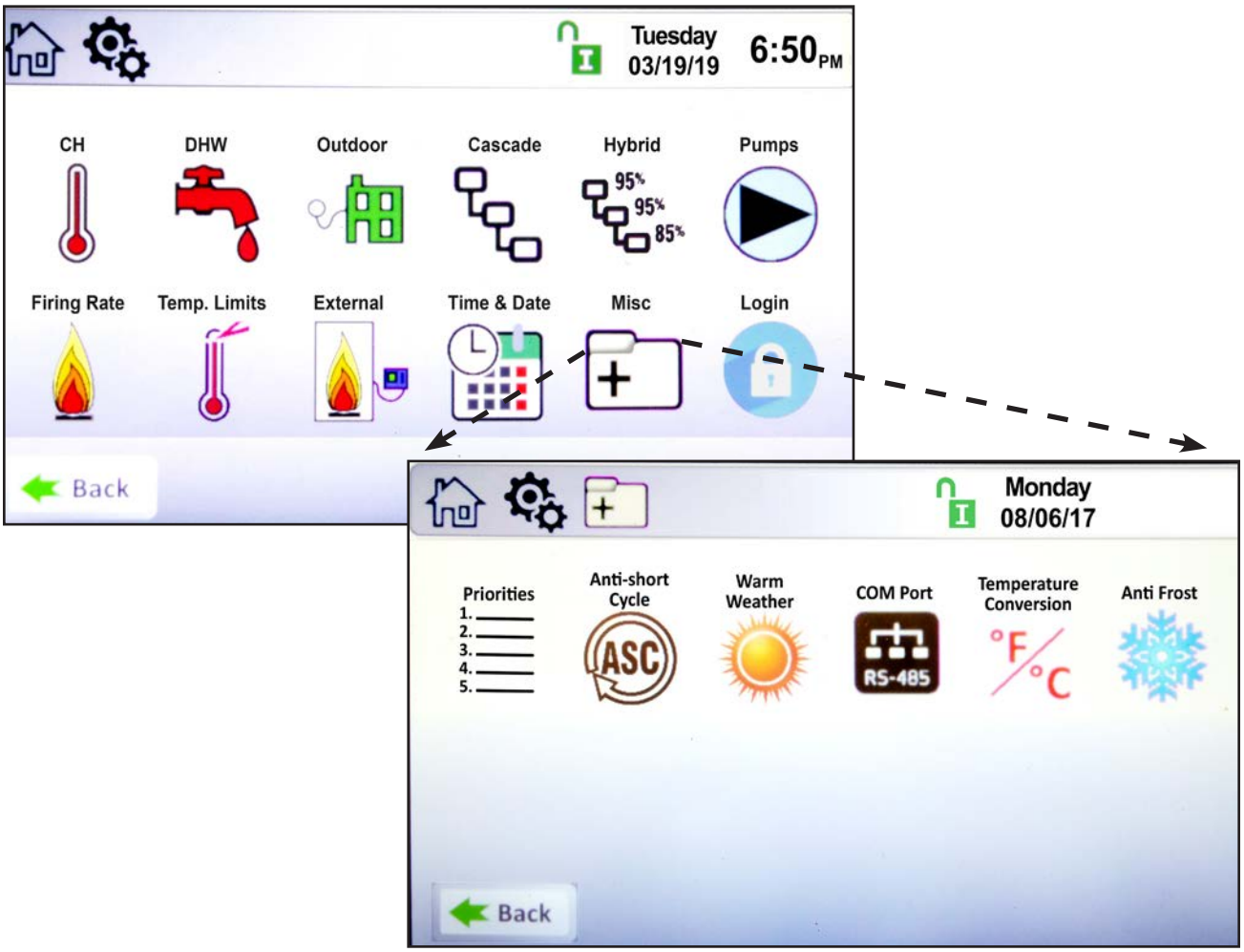

8.D.1 CH (Central Heat)

"CH" stands for "Central Heat." It is used for space heating demands.
On the Configure Screen, touch the CH thermometer icon to navigate to the CH Selection Screen

There are two identical heat demands, CH1 and CH2, each with independent control algorithms and independent inputs on the input terminal strip, see 7.D on page 37

From the CH Selection Screen, touching CH1 navigates to the CH1

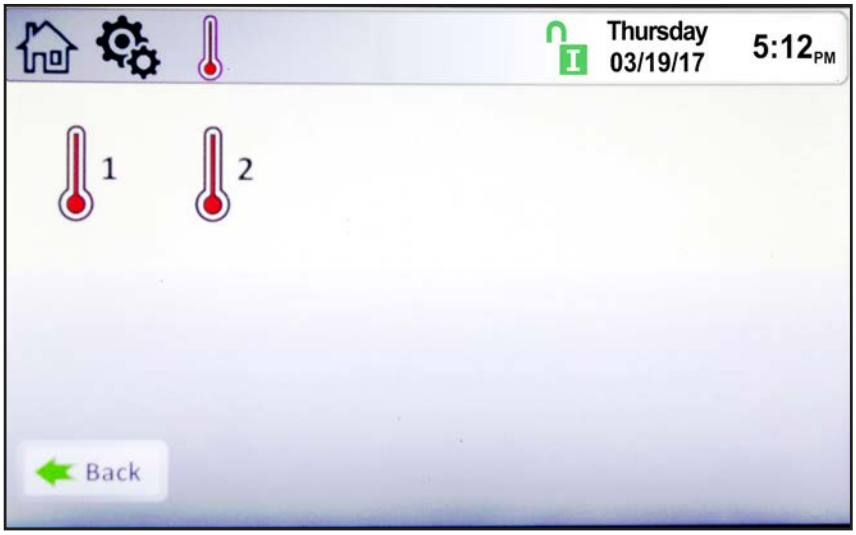

8.D.1.a CH1 (Central Heat, One)

CH1 is one of the heat demands available. The CH1 Configuration Screen allows adjustment of the following parameters:

- **Enable/Disable** - This allows CH1 to be enabled or disabled. The default setting is Enabled.
- **Set Point** - This is the temperature set point for CH1.
- **PID** - This allows adjustment to PID algorithms.
- **Max Power** - Allows the unit to be de-rated to a percentage that will reduce short cycling.

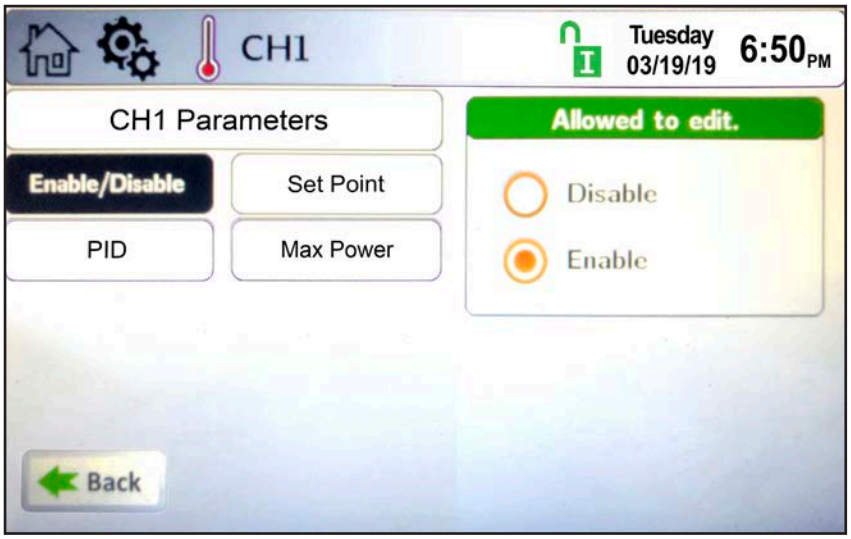

PID

8.D.1.a.1 PID Parameters

Note that in most cases, PID parameters will not need to be changed. The PID Parameters Screen allows adjustment to the following parameters:

- **On Hysteresis** – The temperature below the set point (Set Point – On Hysteresis) at which the control begins calculating the PID output to turn on stages.
- **Off Hysteresis** – The temperature above the set point (Set Point + Off Hysteresis) at which the controller will stop calculating the PID output and set the PID output to 0 to turn off all stages.
- **Proportional Gain** – This value is the corrective action that is proportional to the error (set point – control temperature).
- **Integral Time** – This value is applied to the sum of the error over a period of time.
- **Derivative Time** – This value is applied to the rate of change of the error.

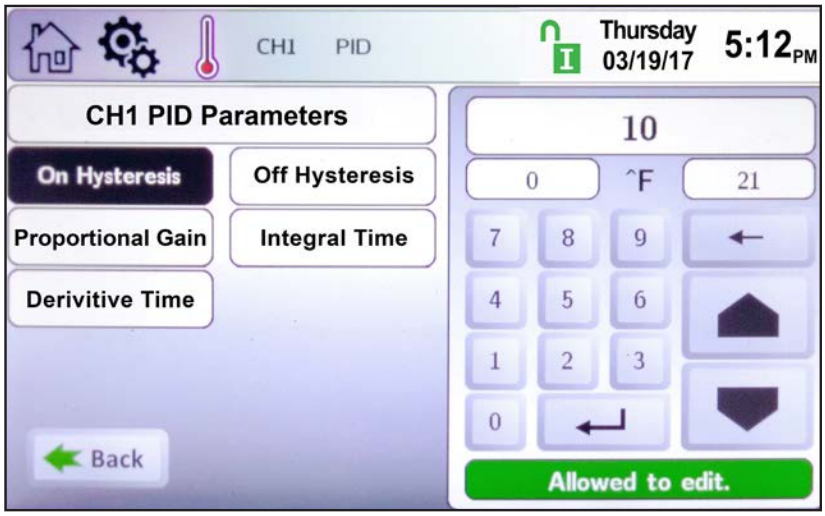

NOTE: By default, the control sensor is the unit outlet sensor, or when installed, the system supply sensor.

8.D.1.b CH2 (Central Heat, Two)

Additional heat demands CH2, are available and are set up in the same manner as CH1.

8.D.2 DHW (Domestic Hot Water)

To navigate to the DHW Screen, touch the DHW faucet icon on the Configure Screen.

DHW has all the same parameters as CH1 and CH2 with one exception. DHW has the following additional parameters for adjustment:

- **DHW Offset** – Upon a DHW heat demand, the unit will control the outlet temperature to the DHW Set Point plus the DHW Offset (set point + DHW Offset).
  For example, with a DHW Set Point of 140°F and a DHW Offset of 40°F, the unit will control the boiler/heater outlet temperature to 180°F (140°F + 40°F) to satisfy the heat demand.

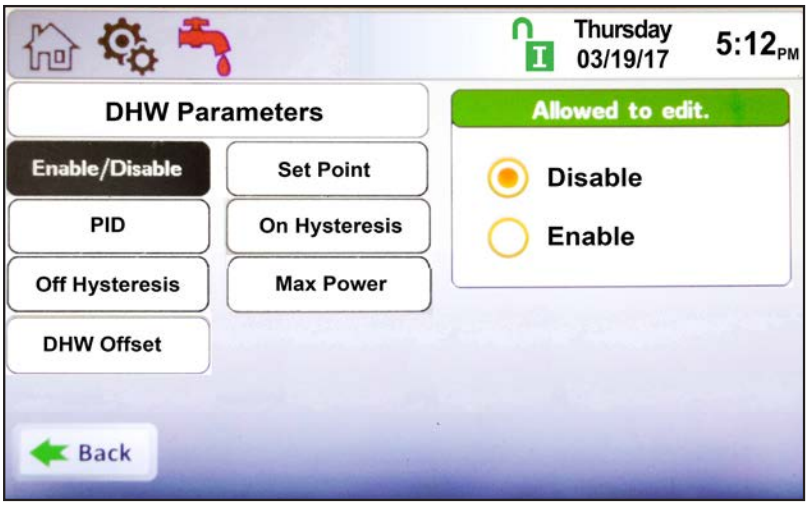

NOTE: A DHW heat demand can be initiated by an aquastat or sensor.

8.D.3 Outdoor Reset

Outdoor reset adjusts a boiler's setpoint based on outdoor air temperature. This is for boilers only, and is not used for domestic water. The Outdoor Parameters Screen allows the adjustment of the following parameters:

- **Enable/Disable** – Enables and disables the outdoor reset functionality.
- **Maximum Outdoor Temperature** – The outdoor temperature at which the unit will use the minimum water temperature as the set point.
- **Minimum Outdoor Temperature** – The outdoor temperature at which the unit will use the maximum water temperature as the set point.
- **Maximum Water Temperature** – The maximum boiler outlet temperature based on the Minimum Outdoor Temperature.
- **Minimum Water Temperature** – The minimum boiler outlet temperature based on the Maximum Outdoor Temperature.

When there is an active outdoor reset condition, the set point will be a calculated value (CSP) based on the outdoor reset settings. The example in figures 41 and 42, shows that the Outdoor Air Temperature is 42°F. Based on this, and without a call for DHW, the set point (CSP) is 160°F. As the outdoor air temperature increases, the CSP decreases.

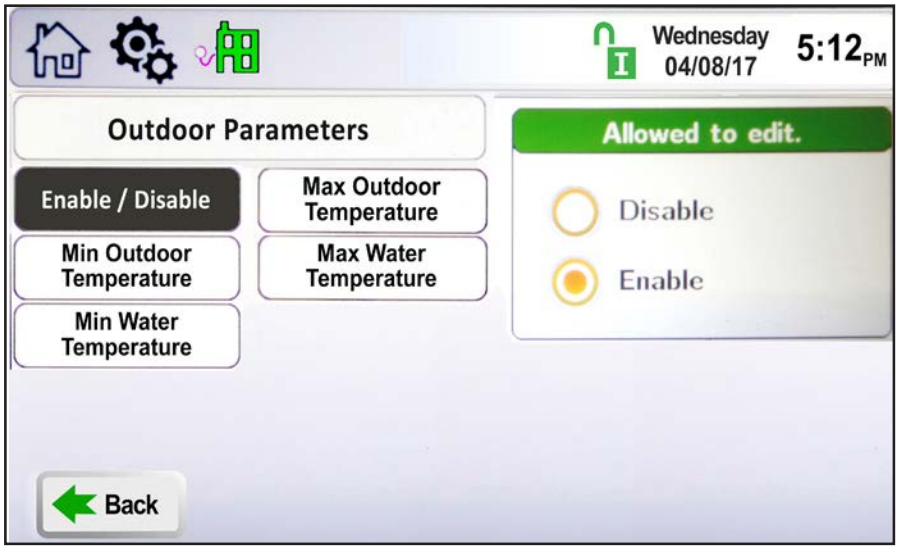

Setpoint		Boiler Status	
CSP:	180°F	B: Running	
CH1:	180°F	Actual Rate:	20 %
CH2:	145°F	Target Rate:	20 %
DHW:	180°F	OAT:	42°F
		Flame:	13.6uA

Pumps

Boiler:	On
System:	On
DHW:	Off

Figure 35. Status Window, Outdoor Reset Example

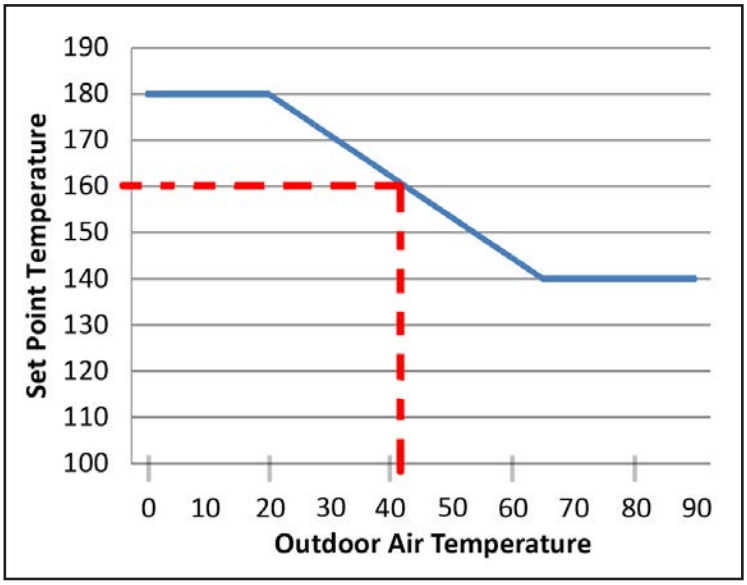

Figure 36. Outdoor Reset Example

8.D.4 Cascade (Lead / Lag)

An installation with two or more units may be configured for cascade operation (Lead / Lag). Up to eight units can be cascaded and controlled together.

To navigate to the Cascade Screen, touch the Cascade Icon on the Configuration Screen.

The Cascade Screen provides four navigation icons to configure the system for cascade operations. These navigation icons are:

- **Cascade CH** – This icon navigates to the setup screen for hydronic boiler cascade operations. This icon is available on hydronic boilers (MGH) only.
- **Cascade DHW** – This icon navigates to the setup screen for water heater cascade operations. This icon is available on water heaters (MGV) only.
- **Rotation** – This icon navigates to the cascade rotation screen.
- **Redundancy** – This icon navigates to the setup screen for cascade Leader redundancy options.

NOTE: A system supply sensor (supplied with each unit) must be installed and connected to the Lead boiler/heater. The Lead boiler/heater will use this system supply sensor as the temperature control sensor for cascade operations.

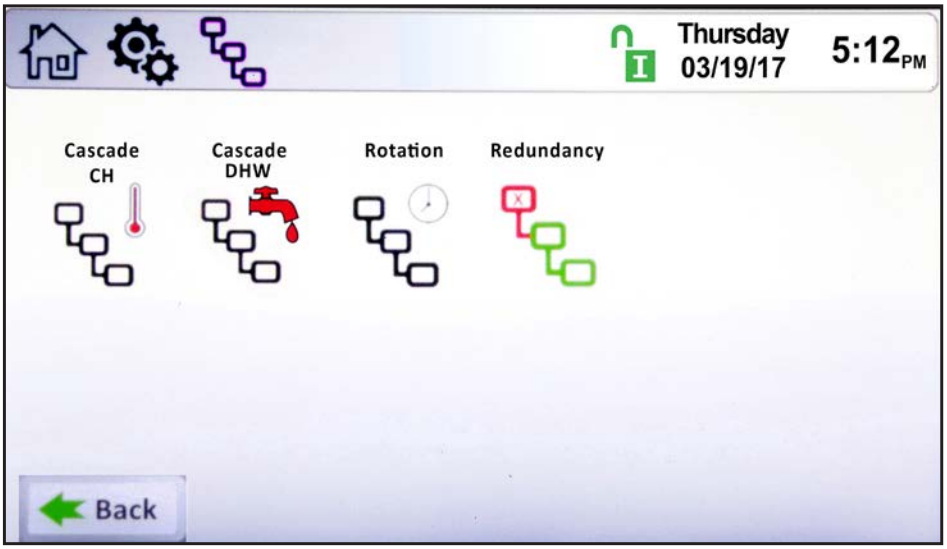

About Cascading (Lead / Lag)

The Lead boiler/heater uses the Base Load Value to determine when to fire the Lag units and at what firing rate. The Base Load Value should be adjusted based on the number of units installed, with a default value of 65%. Recommended base load values based on the number of units installed is shown in the table below. The Base Load Value is adjustable via the DU with installer login credentials.

Upon an active cascade heat demand, the Lead boiler/heater will dictate which unit will fire first based on the cascade rotation logic. As the firing rate of this unit reaches the Base Load Value, once the Min On Time timer expires, the next unit in the sequence will fire and both units will modulate up or down together at the same firing rate in reaction to changes in heat demand. This pattern will continue until the firing rates of all cascaded units reach the base load value. Once all units are firing at the base load value, the firing rate can exceed the base load value, with all units maintaining the same firing rate. Refer to the Lead / Lag figures below for additional clarification.

With boilers/heaters firing at the same firing rate, minimum firing rates need to be taken into consideration. Units with varying turndown ratios can be cascaded together, therefore, the unit with the highest minimum firing rate dictates the minimum firing rate of the total cascaded system. For example, if a 5:1 unit is cascaded with a 20:1 unit, and the 5:1 unit has reached the base load value, the 20:1 will be called to run. The 20:1 will fire at the same firing rate as the 5:1, which

Boiler Qty	Recommended Base Load
1	N/A
2	65%
3	50%
4	40%
5	40%
6	40%
7	40%
8	40%

Table 20. Recommended Base Load Values

About Cascading (Lead / Lag) -continued

	Log In			Settings			
Parameter	User	Installer	OEM	Min	Max	Default	Unit
Base Load		X	X	40	100	65	%
Drop Load		X	X	20	100	20	%
Min On Time		X	X	30	600	60	Seconds
Min Off Time		X	X	30	600	30	Seconds

Table 21. Parameter Settings

is limited to 20% minimum (instead of the allowable minimum firing rate of 5%). In addition, if the Drop Load Value is higher than the minimum firing rate of the unit, the unit will turn off at the Drop Load Value and not the minimum firing rate of the unit.

NOTE: The single exception to a unit turning off at the Drop Load Value in a cascade configuration is when there is only one unit running, where the single unit acts as a standalone boiler/heater.

Low demand: The first boiler in sequence ignites and gradually increases firing rate to satify the heat demand.

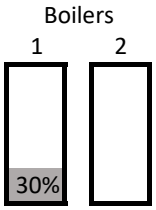

Increased demand: Once the first boiler reaches the Base Load Value (65%) firing rate, the second boiler ignites. After ignition, both units modulate to half of the cascade firing rate, then gradually increase the firing rate together, up to the Base Load Value.

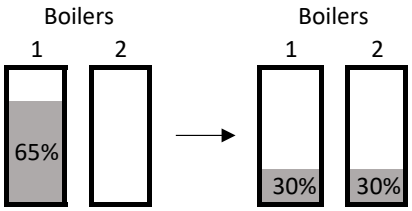

Approaching max demand: Once both boilers reach 65%, both units are allowed to increase firing rate (same at both boilers) up to maximum firing rate.

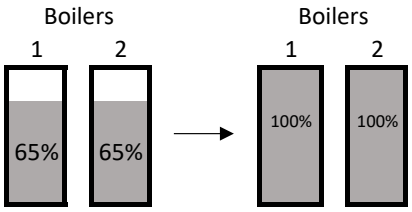

Decreasing demand: As the demand decreases, once the requested firing rate reaches the Drop Load Value, the second boiler turns off.

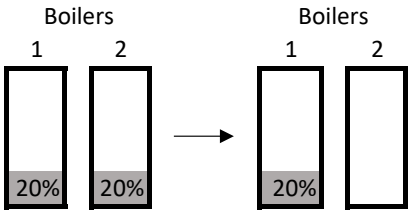

Demand Satisfied: When the heat demand is satisfied or the temperature is at the set point + off hysteresis, the final boiler will turn off.

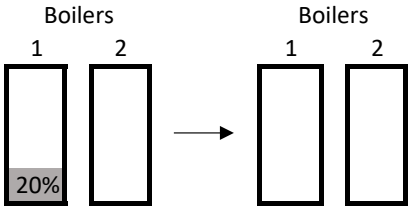

Figure 37. Lead / Lag, 2 Boilers

As the load increases:

- Until all units are firing, no unit is requested to exceed the base load value.
- Additional units are added once the Base Load Value has been reached and the Min On Time timer has expired.
- As long as all boilers/heaters are firing, the base load value can be exceeded, as long as all units maintain the same firing rate.

As the load decreases:

- As long as all units are firing – the base load value can be exceeded, as long as all units maintain the same firing rate.
- As the firing rate decreases below the Drop Load Value, the last unit to ignite turns off first (last on/first off), following this pattern until the heat demand is satisfied and all units are off.

Units in Lead / Lag mode maintain local boiler/heater limiting features (firing rate limiting based on outlet or flue temperature) when in Lead / Lag mode operations.

Low demand: The first boiler in sequence ignites and gradually increases firing rate to satify the heat demand.

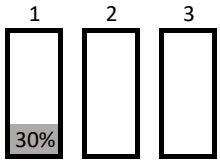

Increased demand: Once the first boiler reaches the Base Load Value (50%) firing rate, the second boiler ignites. After ignition, both units modulate to half of the cascade firing rate, then gradually increase the firing rate together, up to the Base Load Value.

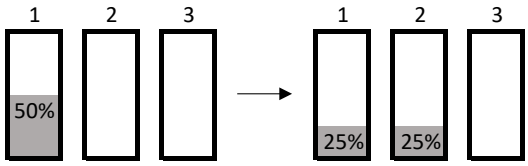

Increased demand: Once the first two boilers reach the Base Load Value (50%) firing rate, the third boiler ignites. After ignition, the three units modulate at 1/3 of the cascade firing rate, then gradually increase firing rate together, up to the Base Load Value.

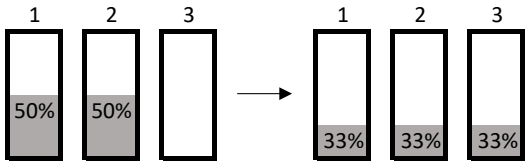

Approaching max demand: Once all three boilers reach the Base Load Value (50%), all units are allowed to increase firing rate (same at all boilers) up to maximum firing rate.

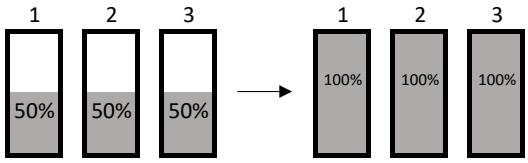

Decreasing demand: As the demand decreases, once the requested firing rate reaches the Drop Load Value, the third boiler turns off.

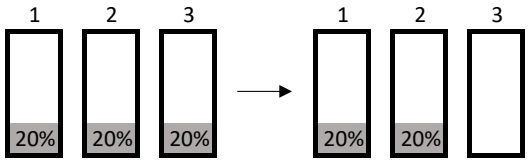

Continued Decreasing demand: As the demand decreases, once the requested firing rate reaches the Drop Load Value, the second boiler turns off.

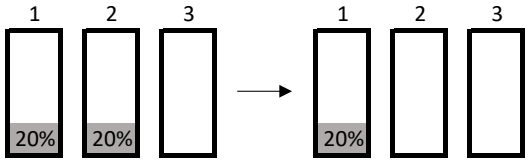

Demand Satisfied: When the heat demand is satisfied or the temperature reaches set point + off hysteresis, the final boiler will turn off.

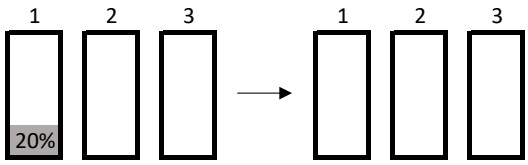

Figure 38. Lead / Lag, 3 Boilers

About Cascading (Lead / Lag) -continued

Low demand: The first boiler in sequence ignites and gradually increases firing rate to satify the heat demand.

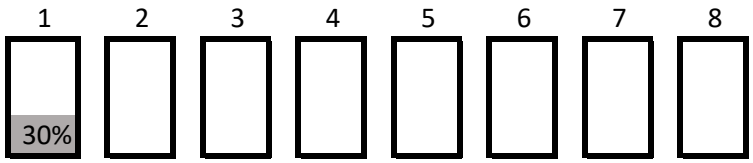

Increased demand: Once the first boiler reaches the *Base Load Value* (40%) firing rate, the second boiler ignites. After ignition, both units modulate to half of the cascade firing rate, then gradually increase the firing rate together, up to the *Base Load Value* .

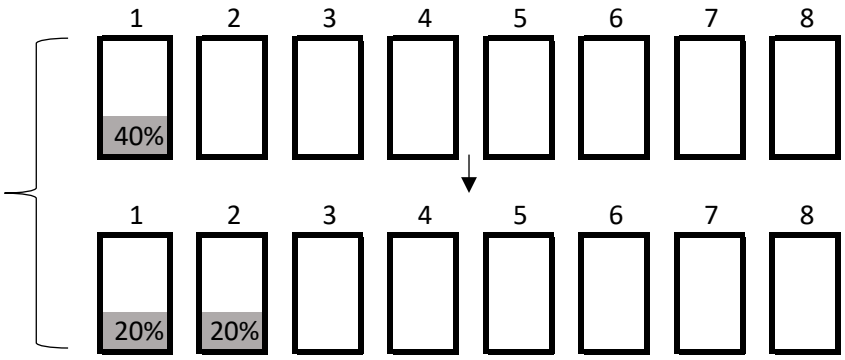

Increased demand: Once the first two boilers reach the *Base Load Value* (40%), the third boiler ignites. After ignition, all three units modulate to 1/3 of the cascade firing rate, then gradually increase firing rate together, up to the *Base Load Value* . This pattern continues as demand increases.

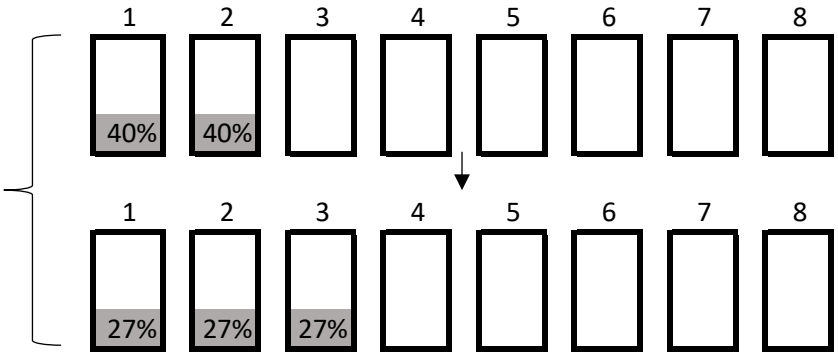

Approaching max demand: Once all eight boilers reach the *Base Load Value* , all units are allowed to increase firing rate (same at all boilers) up to maximum firing rate.

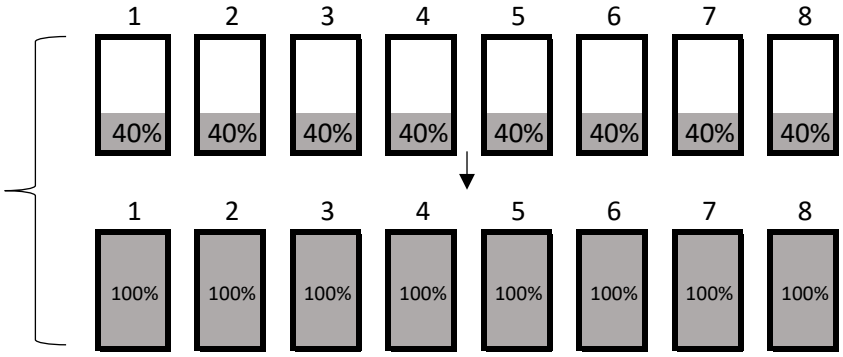

Figure 39. Lead / Lag, Demand Increase, 4 to 8 Boilers

Decreasing demand: As the demand decreases, once the requested firing rate reaches the *Drop Load Value* , the eighth boiler turns off.

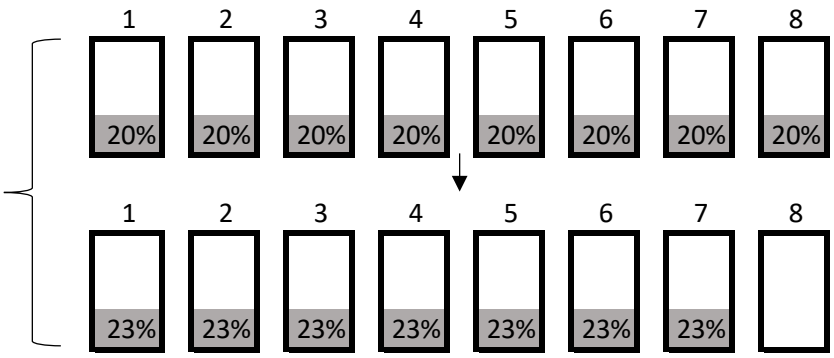

Continued decreasing demand: As the demand decreases, once the requested firing rate reaches the *Drop Load Value* , the seventh boiler turns off. This pattern continues as demand continues to decrease until there is a single boiler firing.

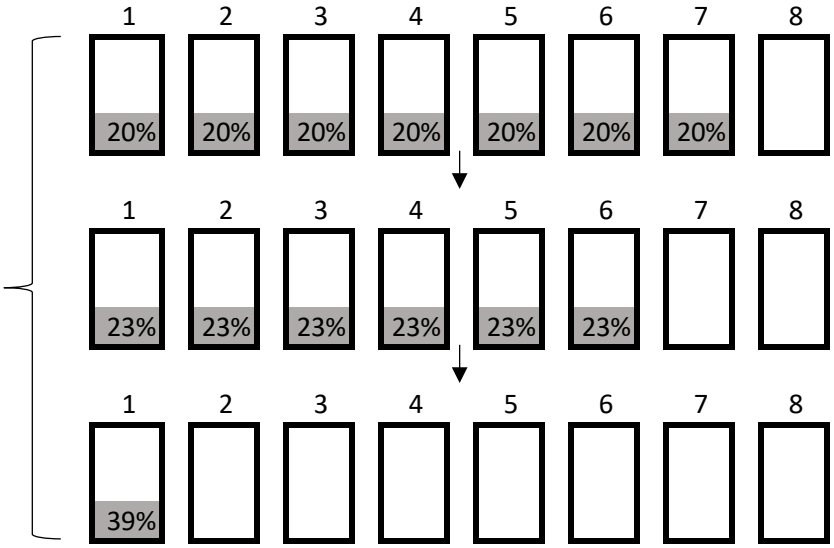

Demand Satisfied: When the heat demand is satisfied or the temperature reaches the set point + off hysteresis, the final boiler will turn off.

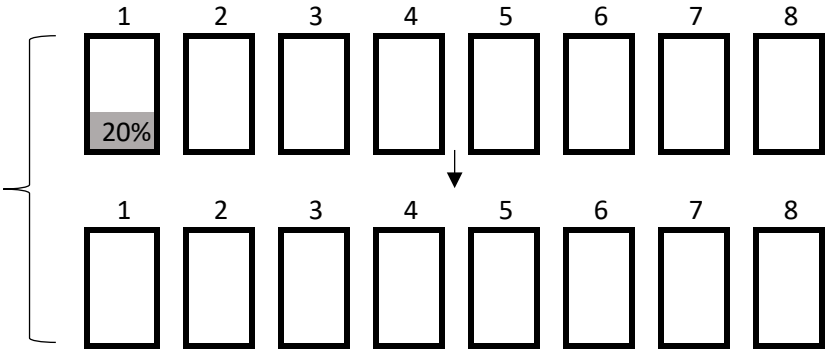

Figure 40. Lead / Lag, Demand Decrease, 4 to 8 Boilers

8.D.4.a Cascade CH

To navigate to the Cascade CH Configuration Screen, touch the Cascade Icon on the Configuration Screen, then touch the Cascade CH Icon on the Cascade Configuration Screen.

The Cascade CH Configuration Screen allows adjustment of the following parameters:

- **Address** – When manually addressing each boiler/heater for cascade operations, this parameter is used to set the local boiler/heater address. Each boiler/heater must have a unique address. A boiler/heater with a value of 0 is the Lead boiler/heater. Lag boilers/heaters use values 1 through 7. When automatically addressing each boiler/heater, set the Lead boiler/heater to a value of 0. With a value of 0, the Cascade Auto-Config button is available to use, refer to this parameter below for instructions for automatic addressing the Lag boilers/heaters.
- **Dynamic Address** – This reflects the address of the local boiler/heater after it has been manually or automatically addressed. After a boiler/heater has been manually/automatically addressed, setting this parameter to -1 will remove the boiler/heater from cascade operations.
- **Lead Settings** – This button is only selectable when configured as the Lead boiler/heater. When configured as the Lead boiler/heater, touching this button navigates to the Lead boiler/heater settings. **See Section 8.D.4.a.1 on page 75**
- **Lost Lead Backup Setpoint** – When configured for Cascade Redundancy - Boiler Internal Set Point, this parameter is the maximum outlet temperature the local boiler/heater is allowed to supply the system.
- **Lag On Hysteresis** - The value below the Max Lag Temp (Max Lag Temp – Lag On Hysteresis) that the boiler/heater will turn on to satisfy an active cascade demand based on the local boiler/heater outlet water temperature. Max Lag Temp is set at the Lead boiler/heater.
- **Lag Off Hysteresis** - The value above the Max Lag Temp (Max Lag Temp + Lag Off Hysteresis) that the boiler/heater will turn off when satisfying an active cascade heat demand based on the local boiler/heater outlet water temperature. Max Lag Temp is set at the Lead boiler/heater.
- **Cascade Auto-Config** – This is only adjustable at the Lead boiler/heater. Once configured as the Lead boiler/heater, pressing this button will initiate the Lead boiler/heater to find and address all Lag boilers automatically.
- **Cascade Release Demand -** When communications with the Lead is lost and the Lag units continue to satisfy the cascade heat demand, pressing this button will remove the heat demand.
  NOTE: This only applies when configured for cascade - Boiler Internal Set Point Control. **See Section 8.D.4.d on page 78**

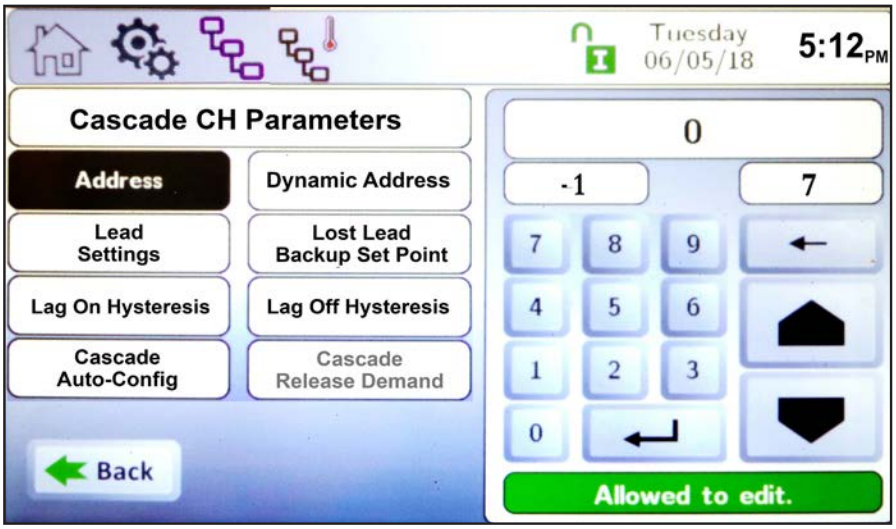

NOTE: All boilers/heaters must be wired for cascade operations prior to performing Cascade Auto-Config.

8.D.4.a.1 Cascade CH Lead Settings

To navigate to the Cascade CH Lead Configuration Screen, touch the Cascade Icon on the Configuration Screen, then touch the Cascade CH Icon on the Cascade Configuration Screen, and then touch the Lead Settings Icon on the Lead unit.

The Cascade CH Lead Configuration Screen allows adjustment of the following parameters:

- **Set Point** – This is the temperature the cascade heat demand is trying to satisfy.
- **Proportional Gain** – This value is the corrective action that is proportional to the error (Set Point – Control Temperature).
- **Integral Time –** This value is applied to the sum of the error over a period of time.
- **Derivative Time** – This value is applied to the rate of change of the error.
- **Off Hysteresis** – The temperature above the set point (Set Point + Off Hysteresis) at which the controller will stop calculating the PID output and set the PID output to 0 to turn off all stages.
- **On Hysteresis** – The temperature below the set point (Set Point – On Hysteresis) at which the control begins calculating the PID output to turn on stages.
- **Max Lag Temp** – The maximum outlet temperature a Lag unit is allowed to supply the system.
- **Base / Drop Load –** This button will get you to the Base / Drop Load screen which allows you to manually enter the base firing percentage of the next cascading boiler as well as the firing point at which this boiler will drop the remaining load to the next cascaded boiler.

8.D.4.a.1.A Base / Drop Load

- **Base Load –** Is the firing rate that must be achieved prior to adding another unit to satisfy the heat demand.
- **Drop Load –** As the demand for heat decreases, this is the firing rate that units turn off. The last unit to fire is the first to get turned off.
- **Min On Time** – As the demand for heat increases, this is the delay time prior to firing additional units.
- **Min Off Time** – As the demand for heat decreases, this is the delay time prior to turning off additional units.

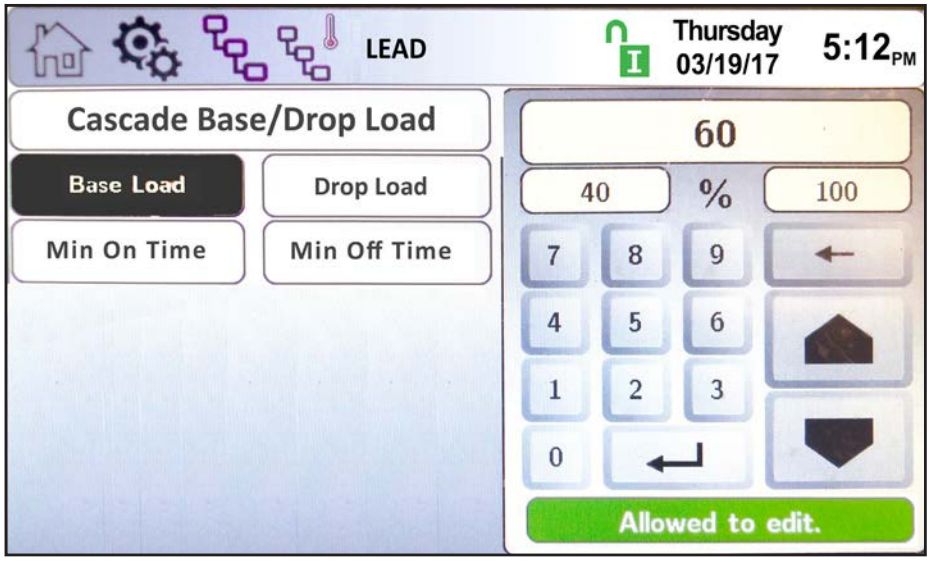

8.D.4.b Cascade DHW

To navigate to the Cascade DHW Configuration Screen, touch the Cascade Icon on the Configure Screen, then touch the Cascade DHW Icon on the Cascade Configuration Screen.

Cascade DHW has the same parameters and setup as Cascade CH

NOTE: Cascade DHW applies to water heater (MGV) units only.

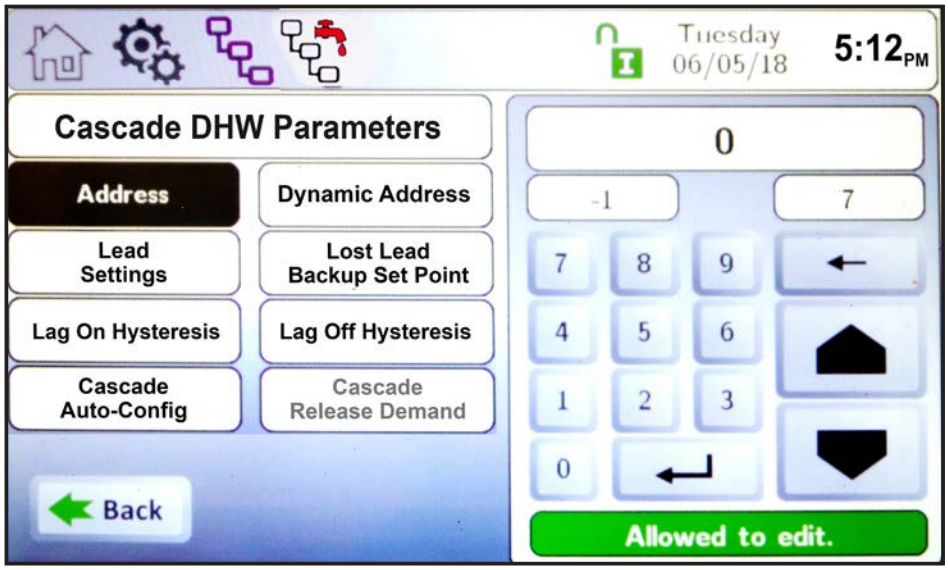

8.D.4.c Rotation

To navigate to the Cascade Rotation Screen, touch the Cascade Icon on the Configure Screen, then touch the Rotation Icon on the Cascade Configuration Screen.

The Cascade Rotation Screen is a view only screen. This screen indicates how many units are connected in a cascade configuration, the order in which each unit will run, and the percent at which each unit is running.

The red circle with the exclamation mark means that that boiler is locked out and will need to be manually reset to return to operations.

The blue circle means that that boiler has a soft or auto-reset condition and the lead boiler has placed it later in the queue to attempt to re-fire.

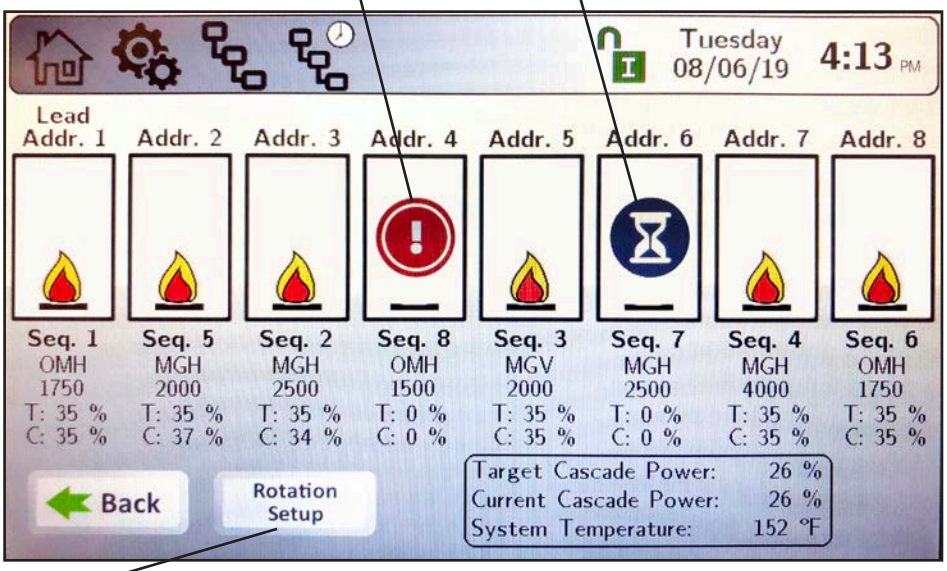

The Rotation Setup button is found only on the boiler that is assigned as 'Lead'.

8.D.4.c.1 Rotation Setup

There are two options for cascade Rotation Setup, Rotation 'Mode':

1. **Run Time**
2. **Recurrence**

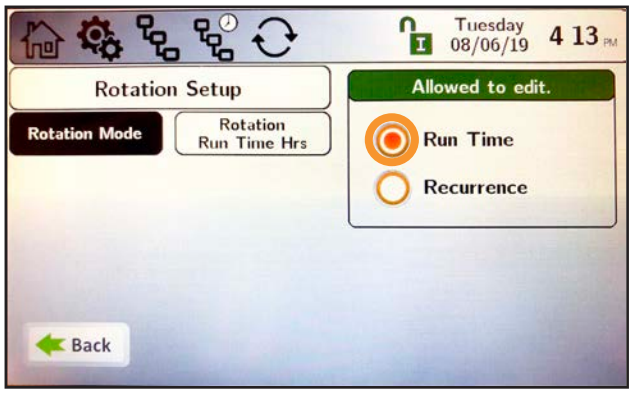

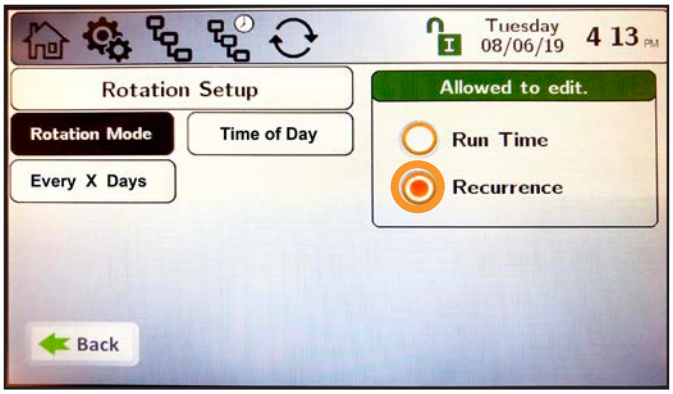

In the **Run Time** Mode, you can adjust only the Rotation Run Time Hours. This chooses which unit will fire first based on run time hours.

For **Recurrence** Mode, there are two parameters:

1. **Time of Day.** You can adjust the hour and minute of the day for rotation.
2. **Every X Days**. You can select how many days you want to wait until rotation, and then it will rotate at the hour and minute of the day previously selected.

8.D.4.d Redundancy

To navigate to the Cascade Redundancy Screen, touch the Cascade Icon on the Configuration Screen, then touch the Redundancy Icon on the Cascade Configuration Screen.

The Cascade Redundancy Screen allows the selection of one of three options for redundancy in cascade systems. These options are:

- **Boiler Internal Set Point** – In a cascade configuration, upon loss of communication with the Lead unit, the Lag units will continue to operate in the same manner as when the communication stopped. For example, if a Lag unit was firing to satisfy a cascade heat demand, it will continue to satisfy the heat demand upon loss of communication with the Leader.
- **Redundant Lead** – In a cascade configuration, upon loss of communication with the Lead unit, a second unit will assume Lead responsibilities.
- **Disable Redundancy** – In a cascade configuration, upon loss of communication with the Lead unit, Lag units will no longer satisfy the cascade heat demand.

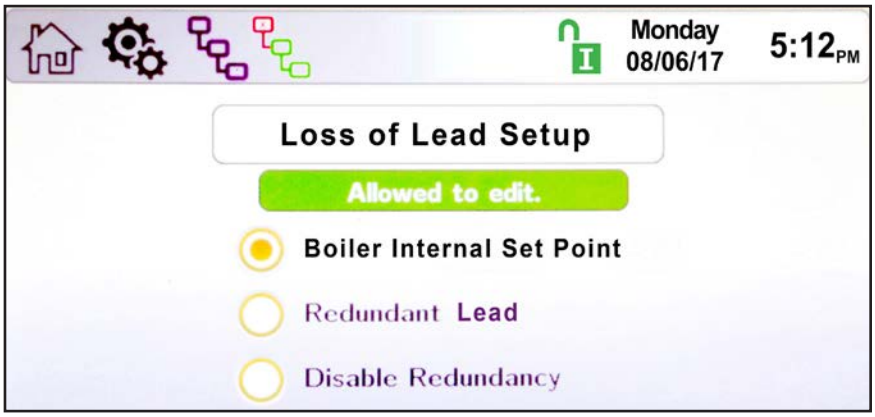

8.D.5 Hybrid

To navigate to the Hybrid Configuration Screen, touch the Hybrid Icon on the Configuration Screen.
The Hybrid Configuration Screen allows adjustment of the following parameters:

- **Hybrid Enable –** This parameter allows Hybrid Mode to be enabled or disabled.
- **Lag Mode –** This parameter allows Lag Mode to be enabled or disabled.
- **Hybrid Set Point –** Based on the system return temperature, with Hybrid Mode enabled, this temperature set point determines which type of boiler (condensing or non-condensing) runs first to satisfy a heat demand.
- **Hybrid Differential –** This parameter is a +/- offset of the Hybrid Set Point used to prevent condensing in non-condensing units.
- **Hybrid Delay –** This parameter is a time delay that, in addition to Hybrid Differential, is used to prevent condensing in non-condensing units.

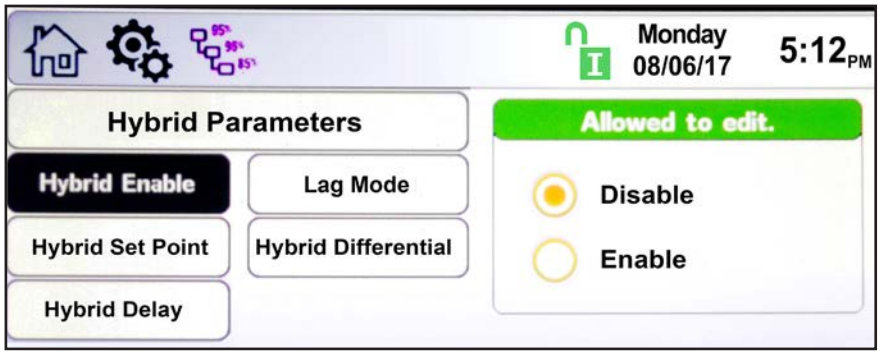

8.D.6 Pumps

The Pump Configuration Screen allows adjustment of the following 7 parameters:

- **Boiler Pump Control –** This parameter provides the ability to set the boiler pump functionality to be:
  Auto – the pump will turn on automatically upon a call for heat.
  Always On – the pump will run continuously.
  Off During DHW – the pump will not turn on during a DHW heat demand.

- **Boiler Pump Post Circulation –** This parameter is the amount of time the boiler/heater pump will continue to run after a heat demand has been satisfied or after a lock-out condition has occurred.

- **DHW Pump Control –** This parameter provides the ability to set the DHW pump functionality to be:
  Auto – the pump will turn on automatically upon a call for heat.
  Always On – the pump will run continuously.
  Disable – the pump will not turn on upon a DHW heat demand.

- **DHW Pump Post Circulation –** This parameter is the amount of time the DHW pump will continue to run after a heat demand has been satisfied or after a lock-out condition has occurred.

- **System Pump Control** – This parameter provides the ability to set the system pump functionality to be:
  Auto – the pump will turn on automatically upon a call for heat.
  Always On – the pump will run continuously, with or without a heat demand.
  Off During DHW – the pump will not turn on during a DHW heat demand.
  Disable – the pump will not turn on during a call for heat.

- **System Pump Post Circulation** – This parameter is the amount of time the System pump will continue to run after a heat demand has been satisfied or after a lock-out condition has occurred.

- **Vari-Prime -** Select Vari-Prime to get to the controls of the variable speed pump.
  Vari-Prime is available only on hydronic units.

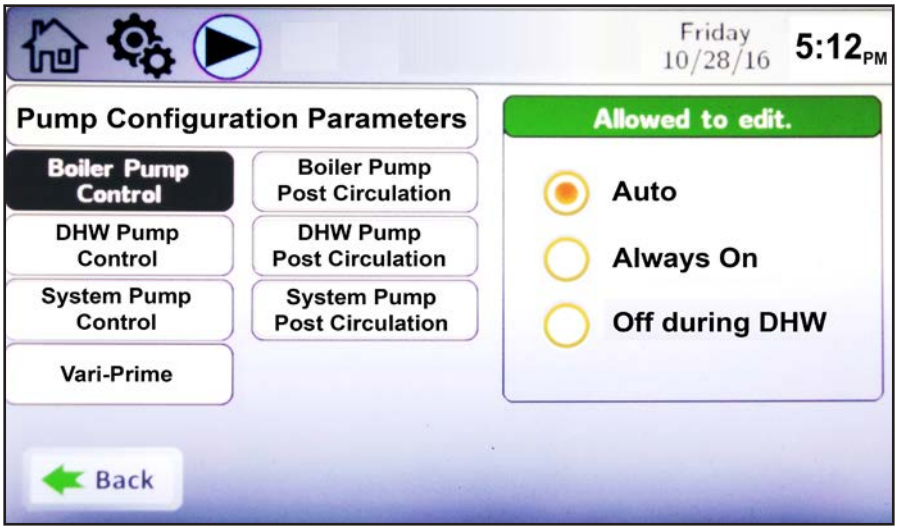

8.D.6.a Variable Speed Pump Control

Variable speed pump control and the Vari-Prime Screen allows the adjustment of the following parameters:

- **On Delay** – Upon a call for heat, once the unit ignites, this is the amount of time the unit will wait prior to modulating the pump speed.
- **Proportional Gain** – This value is the corrective action that is proportional to the error (Set Point – Control Temperature).
- **Integral Time** – This value is applied to the sum of the error over a period of time.
- **Derivative Time** – This value is applied to the rate of change of the error.
- **Minimum Speed** – This is the minimum speed to which the Vari-Prime will control the pump.
- **Maximum Speed** – The is the maximum speed to which the Vari-Prime will control the pump.
- **Off Delay** – Once the heat demand is satisfied, Vari-Prime will control to the maximum pump speed until the Off Delay time expires.
- **Delta T** – Vari-Prime will control the pump to maintain this delta T (temperature rise) across the unit.

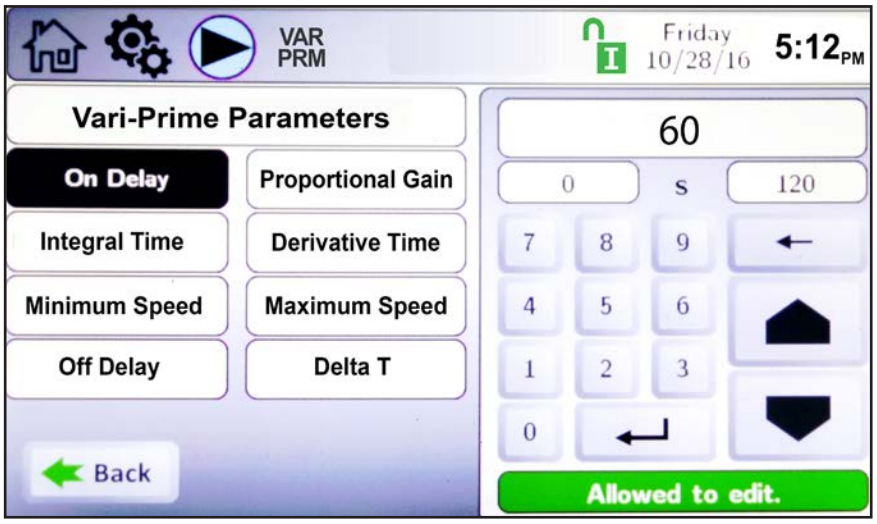

Note: Variable Speed Pump Control applies only to Boilers.

8.D.7 Manual Firing Rate

To navigate to the Manual Firing Rate Screen, touch the Manual Firing Rate Icon on the Configuration Screen.

The Manual Firing Rate Control Screen allows the adjustment of the following parameters:

- **Enable/Disable** – Enables and disables the manual firing rate functionality.
- **Fan Speed** – With the manual firing rate functionality enabled, an operator can manually set the firing rate. This functionality is used for combustion adjustment purposes. With the manual firing rate functionality enabled, and the desired fan speed set, apply a call for heat at CH1/DHW1 and the boiler/heater will step through the ignition process and run at the set fan speed.
- **Time Out** – is the setable amount of time that the operator has to adjust the Manual Firing Rate before the control will go back to automatic. It's a walkaway timer and safety feature.

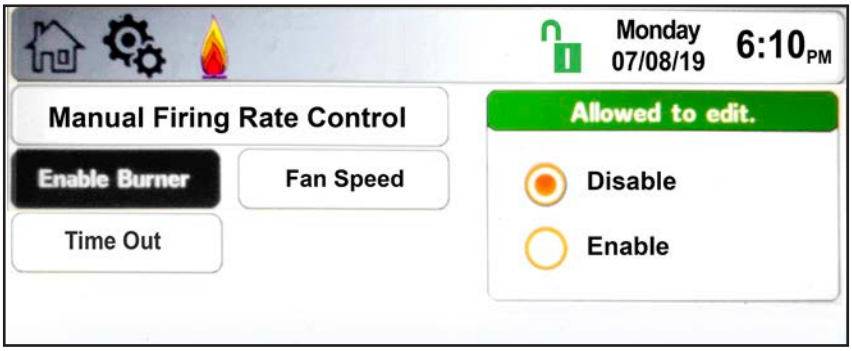

8.D.8 Temp Limits

To navigate to the **Temp Limits** Screen, touch the Temp Limits Icon on the Configuration Screen.

The Temp Limits Configuration Screen allows adjustment of the following parameters:

- **Auto Reset CH–** The temperature at which the unit will shut down when outlet temperature exceeds its maximum auto reset set point. The control will automatically reset, based on the reset differential.
- **Manual Reset CH –** The temperature at which the unit will shut down when outlet temperature exceeds its maximum manual reset set point. The control will require manual reset in this condition.
- **Reset Differential –** The value below the Auto Reset temperature at which the unit will automatically reset itself and resume functionality.
- **Delta T Parameters–** The MIN and MAX Temperature between which your system will modulate.
- **Flue Limitation –** Sets the flue temp limitations.
- **Outlet Limitation Parameters –** Allows for the adjustment of Min and Max Outlet Temps.

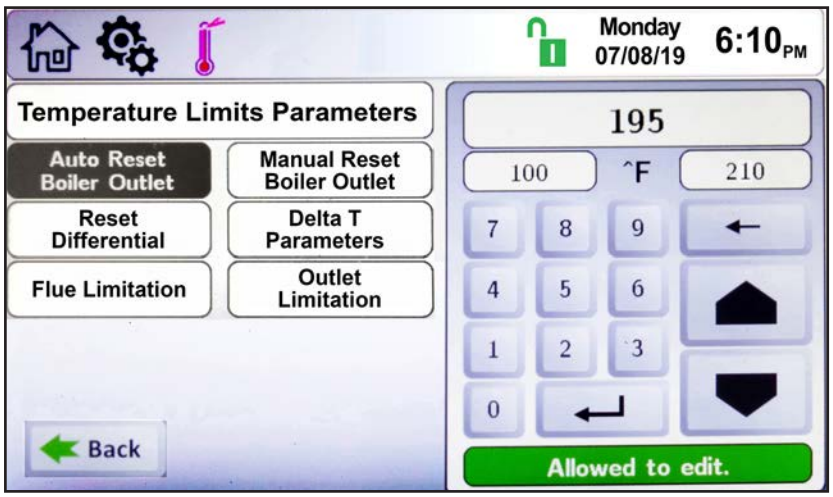

8.D.8.a Delta T Parameters

To navigate to the Delta T Parameters Screen, touch the Temp Limits Icon on the Configuration Screen, then touch the Delta T Parameters button on the Temperature Limits Parameters Screen.

The Delta T Parameters Screen allows adjustment of the following parameters:

- **Enable/Disable** – Enables/disables the Delta T temperature functionality.
- **Delta T Temp Max** – The temperature difference between the unit's inlet and outlet at which the boiler/heater will run at the minimum firing rate.
- **Delta T Temp Min** – The temperature difference between the unit's inlet and outlet at which the boiler/heater will begin to de-rate to prevent a Delta T shut down condition.

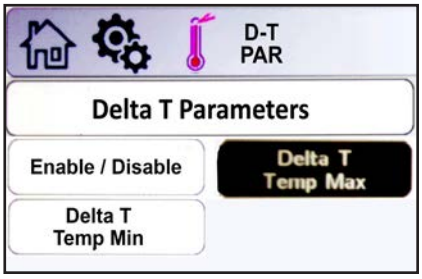

8.D.8.b Flue Limitation Parameters

To navigate to the Flue Limitation Parameters Screen, touch the Temp Limits Icon on the Configuration Screen, then touch the Flue Limitation button on the Temperature Limits Parameters Screen.

The Flue Limitation Parameters Screen allows adjustment of the following parameters:

- **Manual Reset Flue** – The temperature at which the unit will shut down due to exceeding a flue temperature manual reset condition.
- **Flue Temp MIN & Flue Temp Max-** The control will attempt to prevent the unit from reaching the Manual Reset Flue lockout condition by modulating the fan speed (and therefore, the input). Flue Temp Min is the temperature setting at which the unit will begin to de-rate the input. It de-rates linearly until it hits the Flue Temp Max setting, where the fan is at minimum speed.

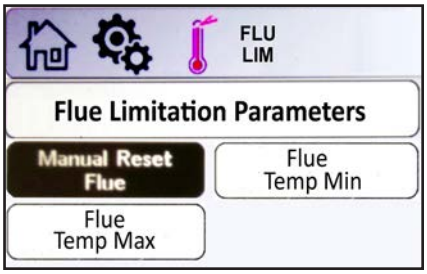

8.D.8.c Outlet Limitation Parameters

To navigate to the Outlet Limitation Parameters Screen, touch the Temp Limits Icon on the Configuration Screen, then touch the Outlet Limitation button on the Temperature Limits Parameters Screen.

The Outlet Limitation Parameters Screen allows adjustment of the following parameters:

- **Outlet Temp Min** – The outlet temperature at which the boiler/heater will begin to de-rate, in an attempt to prevent a manual reset high temperature outlet shut down condition.
- **Outlet Temp Max** – The outlet temperature at which the boiler/heater will shut down on a manual reset high temperature outlet condition.

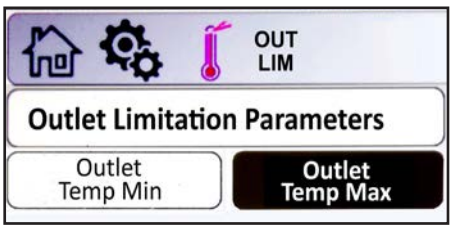

8.D.9 External

The External Configuration Screen applies to the 0-10VDC (4-20mA) analog input BAS signal, and allows adjustment of the following parameters:

To navigate to the External Configuration Screen, touch the External Icon on the Configuration Screen.

- **Control Mode –** This parameter provides the ability to either disable external control or configure the unit for Boiler Set Point or Firing Rate control mode.
- **Max Set Point –** When the Control Mode is set to Boiler Set Point, this is the maximum value that corresponds to the Demand Max value.
- **Min Set Point –** When the Control Mode is set to Boiler Set Point, this is the minimum value that corresponds to the Demand Min value.
- **Demand Max –** This is the maximum value that corresponds to the control mode selected. With Firing Rate control mode selected, this is the maximum rate at which the boiler/heater will run. The unit of this parameter is %, so if the value of this parameter is 10000, or 100.00%, this equates to 10.0VDC or 20mA.
- **Demand Min –** This is the minimum value that corresponds to the control mode selected. With Firing Rate control mode selected, this is the minimum rate at which the boiler/heater will run. The unit of this parameter is %, so if the value of this parameter is 2000, or 20.00%, this equates to 2.0VDC or 4.8mA.

  NOTE: An external demand applied to the Lead boiler in a cascaded system will be treated as a local or stand alone heat demand and not trigger the cascade heat demand.

- **Demand On –** This is the threshold (VDC/mA) at which the input signal will initiate the selected control mode behavior. The unit of this parameter is %, so if the value of this parameter is 1500, or 15.00%, this equates to 1.5VDC or 4.6mA.
- **Demand Off –** This is the threshold (VDC/mA) at which the input signal will deactivate the selected control mode behavior. The unit of this parameter is %, so if the value of this parameter is 1000, or 10.00%, this equates to 1.0VDC or 4.4mA.
- **Input Type –** This parameter allows the user to select between voltage (0-10VDC) or current (4-20mA) input. Jumpers will need to be configured accordingly.

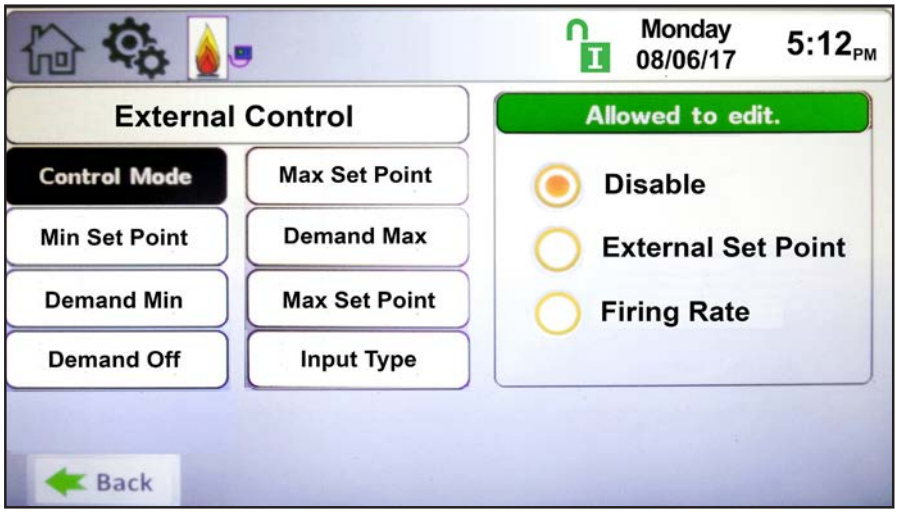

8.D.9.a External – Remote Set Point

External (0 – 10VDC or 4 – 20mA)

- An External heat demand can be initiated by a Building Automation System (BAS) using a 0-10VDC or 4-20mA signal. This input can be configured for Remote Set Point or Remote Firing Rate operations.
  - With Remote Set Point selected, the unit will initiate a heat demand once the analog input signal exceeds the Demand On value. Once the demand is initiated, the analog input signal must be lower than Demand Off to remove the heat demand. With an active demand, the unit will locate the set point according to the analog input signal.
- Using the default values for Boiler Max Set Point (180°F), Boiler Min Set Point (140°F), Demand Minimum (2.5VDC), Demand Maximum (10.0VDC), the unit will linearize the set point, as shown in **Figure 41**.

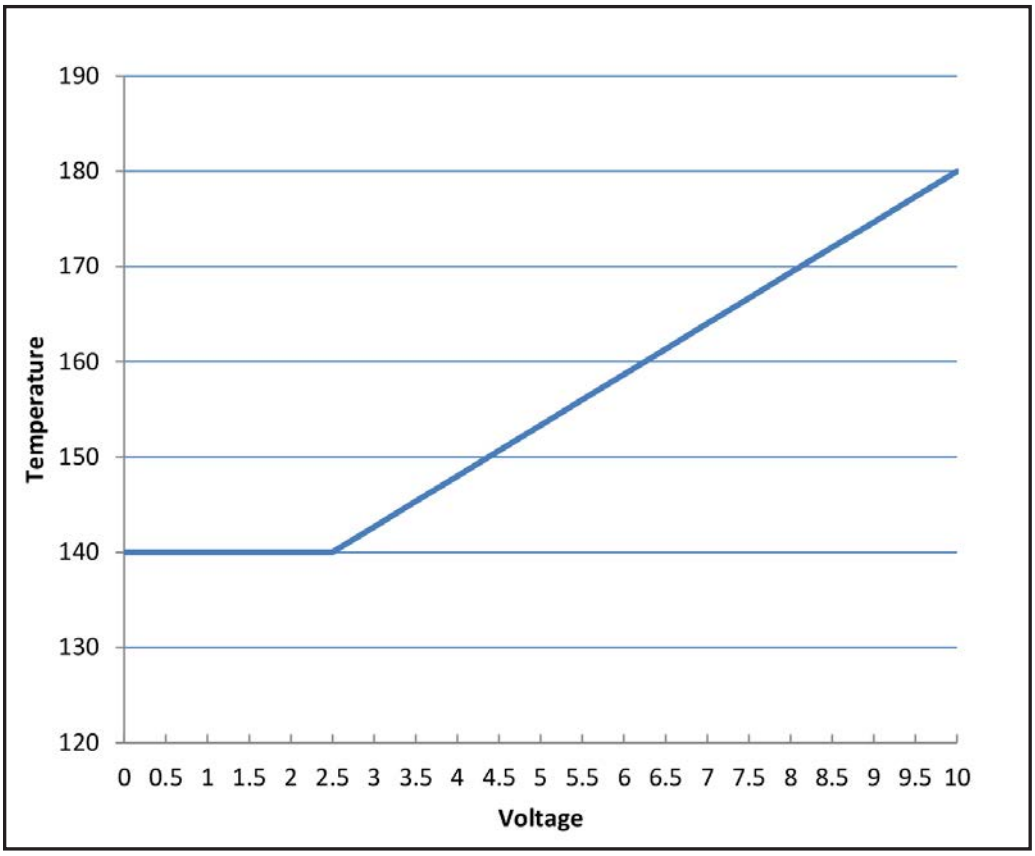

Figure 41. External Setp Point Example

8.D.9.b External Firing Rate

With External Firing Rate selected, the unit will initiate a heat demand once the analog input signal exceeds the Demand On value. Once the demand is initiated, the analog input signal must be lower than Demand Off to remove the heat demand. The external analog signal will activate stages as shown in **Figure 42**. In this control mode, if the unit outlet temperature exceeds the Auto Reset High Limit setting, the boiler will shut down and an “Auto Reset High Limit” condition will appear on the Messages screen. Once the outlet temperature decreases below the value of (Auto Reset High Limit – Reset Differential), the boiler will turn back on at the firing rate set by the analog input signal.

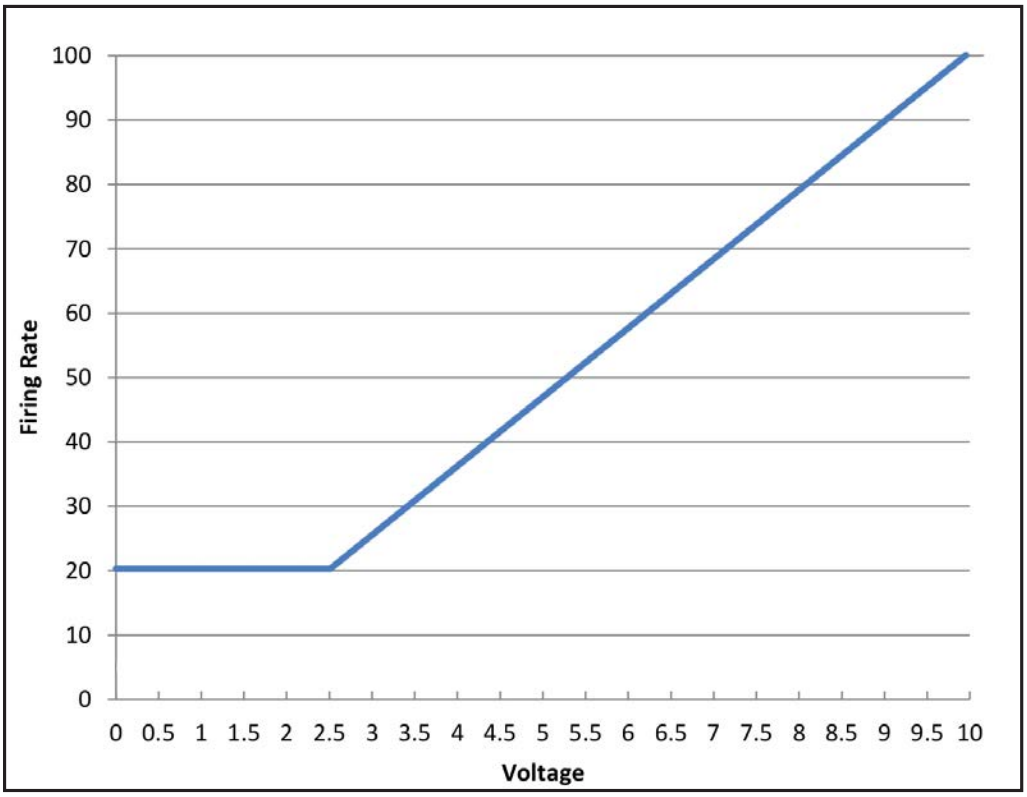

Figure 42. External Firing Rate Example

8.D.10 Time & Date

To navigate to the Time & Date Quick Start Screen, touch the Time and Date area of ANY Screen.

NOTE: The Time is set in a 24 hour parameter but displays only as a 12 hour clock with the AM / PM automatically added.

The Time & Date Quick Start Screen allows adjustment of the following parameters:

- **Hour**
- **Minute**
- **Month**
- **Day**
- **Year**

8.D.11 Miscellaneous Features

To navigate to the Miscellaneous Features Screen, touch the Miscellaneous Features Icon on the Configuration Screen.

The Miscellaneous Features screen provides navigation for the following items:

- **Priorities –** To set the Demand Priorities for all configured CHW or DHW heating demands. The higher the number, the higher the priority it is assigned.
- **Anti-Short Cycle –** To navigate to the Anti-Short Cycle Configuration Screen.
- **Warm Weather –** To navigate to the Warm Weather Configuration Screen.
- **COM Port –** To navigate to the Communication Port (Modbus / BACnet MSTP) Configuration Screen.
- **Temperature Conversion –** To navigate to the Temperature Conversion Configuration Screen.
- **Anti-Frost –** To navigate to the Anti-Frost Configuration Screen.

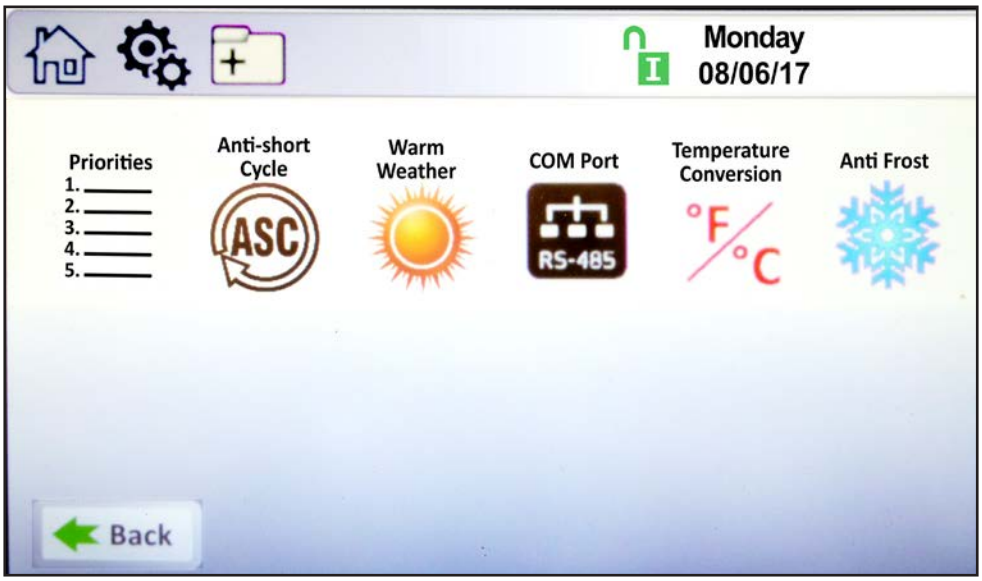

8.D.11.a Demands Priorities

To navigate to the Demands Priorities Screen, first go to the Miscellaneous folder.

At the Demands Priorities screen select each configured demand and assign a priority number. The higher the number, the higher the priority that demand is assigned.

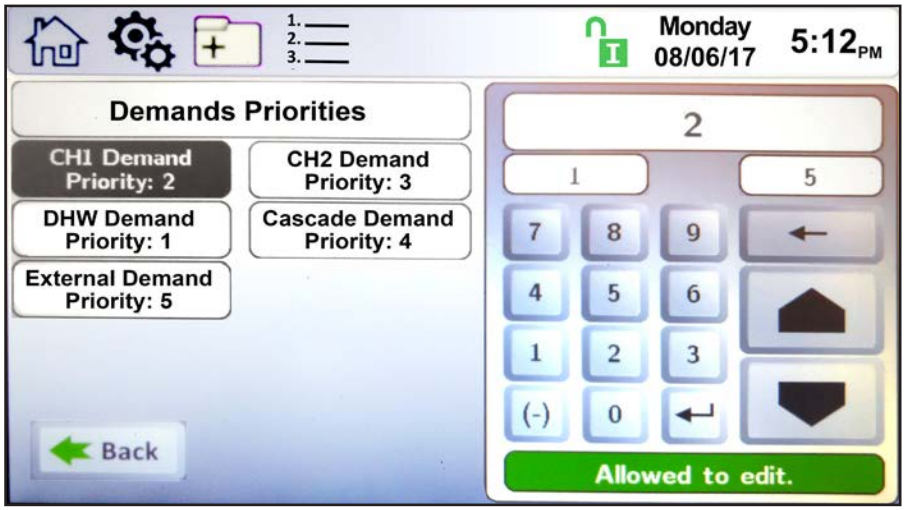

Remember to always save the new setting with the button.

8.D.11.b Anti-Short Cycle

To navigate to the Anti-Short Cycle Configuration Screen, touch the Miscellaneous Features Icon on the Configuration Screen, then touch the Anti-Short Cycle Icon on the Miscellaneous Features screen.

The Anti-Short Cycle Configuration Screen allows adjustment of the following parameter:

- **Cycle Time –** The amount of time after a heat demand is satisfied that the unit will wait to initiate the next active heat demand.

NOTE: Anti-Short Cycle Time does not apply to DHW heat demands.

Remember to always save the new setting with the button.

8.D.11.c Warm Weather

To navigate to the Warm Weather Configuration Screen, touch the Miscellaneous Features on the Configuration Screen, then touch the Warm Weather Icon on the Miscellaneous Features screen. The Warm Weather Configuration Screen allows adjustment of the following parameters:

- **Temp Min –** Upon an active warm weather shutdown condition, this is the temperature at which the unit will reset the shutdown condition to satisfy a heat demand.
- **Temp Max –** This is the temperature at which the warm weather shutdown condition will occur.
- **Feature Options –** This parameter provides the ability to either disable warm weather shutdown or upon a warm weather condition, configure the unit to shut down immediately or to shut down after the current heat demand is satisfied.
- **Summer Kick CH –** The amount of time the unit pump is energized if it hasn't cycled for an extended period of time.
- **Summer Kick DHW –** The amount of time the DHW pump is energized if it hasn't cycled for an extended period of time.
- **Summer Kick SYS –** The amount of time the SYS pump is energized if it hasn't cycled for an extended period of time.
- **Summer Kick Period –** The duration of time between heat demands that the boiler will wait before exercising the boiler, DHW, and system pumps.

There are three options for Warm Weather Shutdown (WWSD). WWSD is only applicable to boilers. It is not mandatory, so it can be enabled/disabled on the WWSD configuration screen.

1 - WWSD - Shutdown Immediately

When the outdoor sensor measures an outdoor air temperature that exceeds the WWSD set point, one of the following two conditions will occur. If the unit is idle, upon a call for heat, the unit will not turn on to satisfy a heat demand. If the unit is running to satisfy a call for heat, the unit will immediately shutdown. In either case, the WWSD icon will appear on the home screen.

2 - WWSD – Shutdown After Demand is Satisfied

When the outdoor sensor measures an outdoor air temperature that exceeds the WWSD set point, one of the following two conditions will occur. If the unit is idle, upon a call for heat, the unit will not turn on to satisfy a heat demand, and the WWSD icon will be shown on the home screen. If the unit is running to satisfy a call for heat, the unit will satisfy the heat demand and then the WWSD shutdown icon will appear. As long as the unit is in a WWSD condition, no additional heat demands will be satisfied.

3 - WWWD – Disabled

Control ignores any WWSD set points, and operates normally.

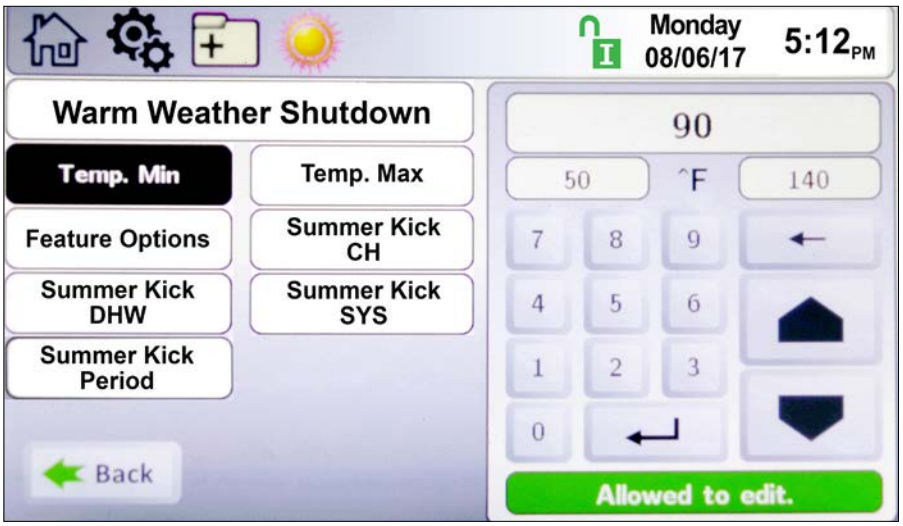

8.D.11.d COM Port, BMS

The control has Modbus and BACnet MSTP (RS485) protocols on board, for use with Building Management Systems. Gateways can be used for other communication protocols.

To navigate to the COM Port Configuration Screen, touch the Misc Icon on the Configuration Screen, then touch the COM Port Icon on the Misc Configuration Screen. The COM Port Configuration Screen allows adjustment of the following parameters:

With Modbus protocol selected, the following parameters are adjustable on this screen:

- **Baudrate –** Modbus can be configured for the following standard baudrates: 9600, 19200, 38400, and 57600.
- **Address –** The address of the unit on the Modbus network.
- **Timeout –** Upon loss of communication, this is the duration of time in which the unit will wait prior to timeout conditions occurring.

With BACnet protocol selected, the following parameters are adjustable on this screen:

- **Baudrate –** BACnet can be configured for the following standard baudrates: 9600, 19200, 38400, and 76800.
- **Address –** The address of the unit on the BACnet network.
- **Timeout –** Upon loss of communication, this is the duration of time in which the unit will wait prior to timeout conditions occurring.
- **Device Model Name –** The name of the unit Model on the BACnet network.
- **Device Object Name –** The name of the unit Object on the BACnet network.
- **Object Instance –** The object number of the unit on the BACnet network.

NOTE: Changing the protocol requires a power cycle of the unit for the change to take effect.

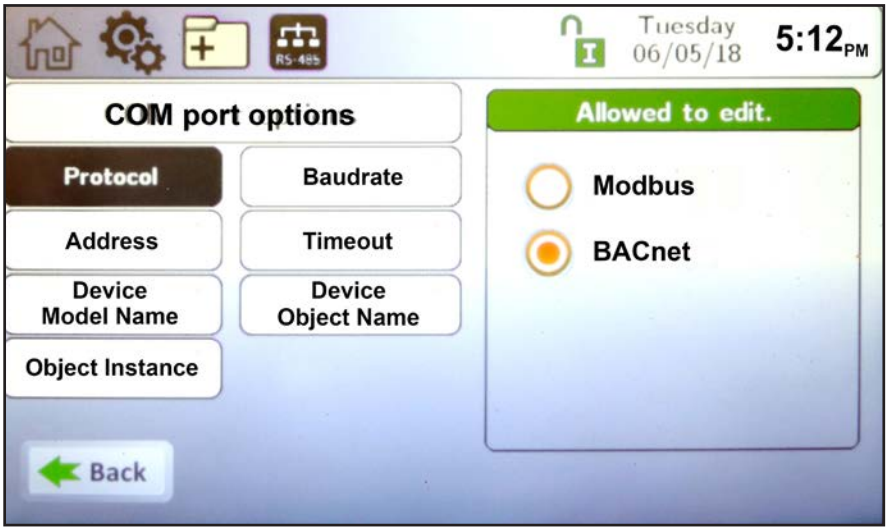

8.D.11.e Temperature Conversion

To navigate to the **Temperature Conversion** Configuration Screen, touch the ***Temperature Conversion*** Icon on the Miscellaneous Features screen.

The Temperature Conversion Configuration Screen allows adjustment of the following parameter:

- **Conversion unit –** This parameter can be set to Fahrenheit or Celsius.

8.D.11.f Anti-Frost

To navigate to the Anti-Frost Configuration Screen, touch the Miscellaneous Features Icon on the Configuration Screen, then touch the Anti-Frost Icon on the Miscellaneous Features screen.

The Anti-Frost Configuration Screen allows adjustment of the following parameters:

- **Anti-Frost –** This parameter provides the ability to either disable anti-frost or upon an anti-frost condition, configure the unit to only turn on the pump or to turn on the pump and fire the burner.
- **Set Point –** The unit will enter anti-frost mode when the unit's inlet sensor reads the set point minus the hysteresis value. It will leave anti-frost mode at the set point plus the hysteresis value.
- **Hysteresis –** This parameter is a +/- offset of the Anti-Frost Set Point used to turn on/off the Anti-Frost mode.
- **Pump Control –** This parameter provides the ability to select which pump(s) are used in Anti-Frost Mode.

The Set Point parameter is the temperature at the boiler inlet sensor to which the boiler/heater will apply the Hysteresis value to enable the Anti-Frost mode.

For example, if the Set Point is 44°F, and the Hysteresis is 4, Anti-Frost will initiate at 40°F (set point – hysteresis) and then will end at 48°F (set point + hysteresis). If Pump Only or Pump and Burner mode is selected, the Pump Control parameter allows configuration of which pump(s) will run during an anti-frost condition. At least one pump must be selected, but all three pumps (unit, DHW, or System) can be selected. If Anti-Frost mode is active, a snow flake icon will appear above the unit inlet temperature on the home screen. As shown in Figure 43

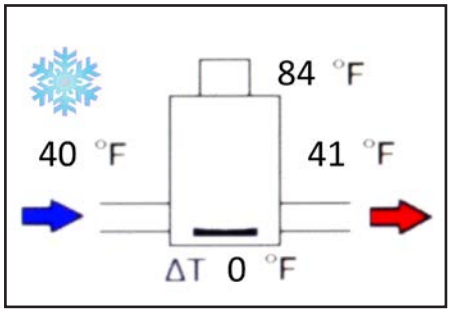

Figure 43. Active Anti Frost Condition

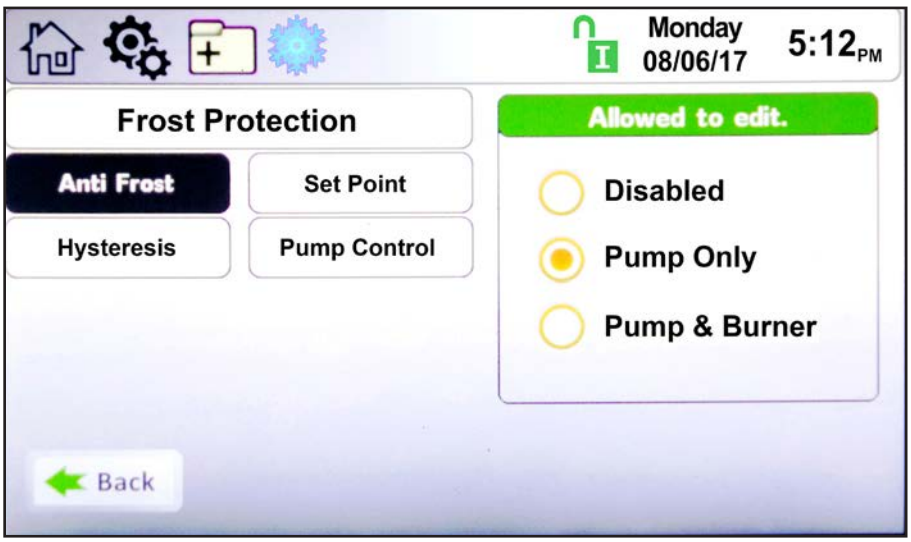

8.D.12 Login

To navigate to the **Login** Screen, touch the Lock Icon on ANY screen.

The Login Screen allows the operator to make parameter adjustments based on the level of the login credentials.

See Section 8.B on page 60

Table 23 on page 99 and Table 24 on page 102 indicate which parameters are available with each login level.

8.E Service Screens

To navigate to the Service Screen, touch the Service Icon in the lower left portion of the Home Screen.

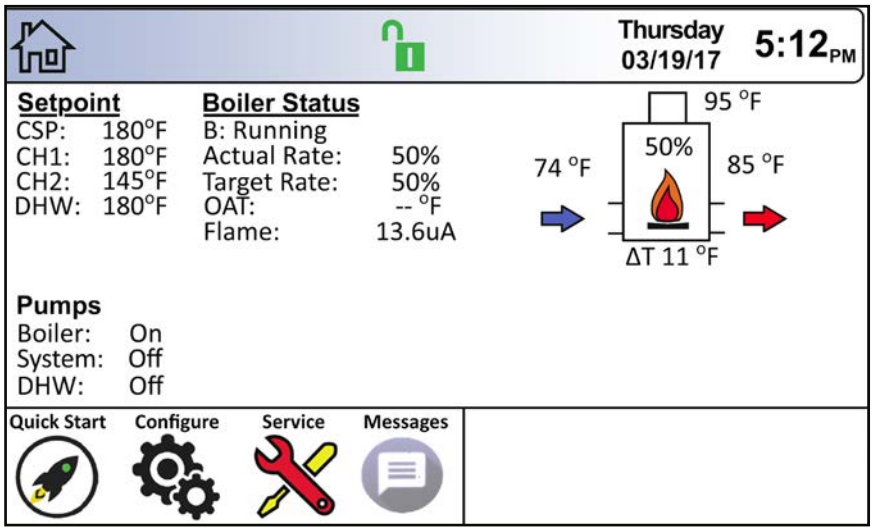

8.E.1 Burner

Navigate to the Burner Screen by touching the **Burner** Button on the Service Screen.

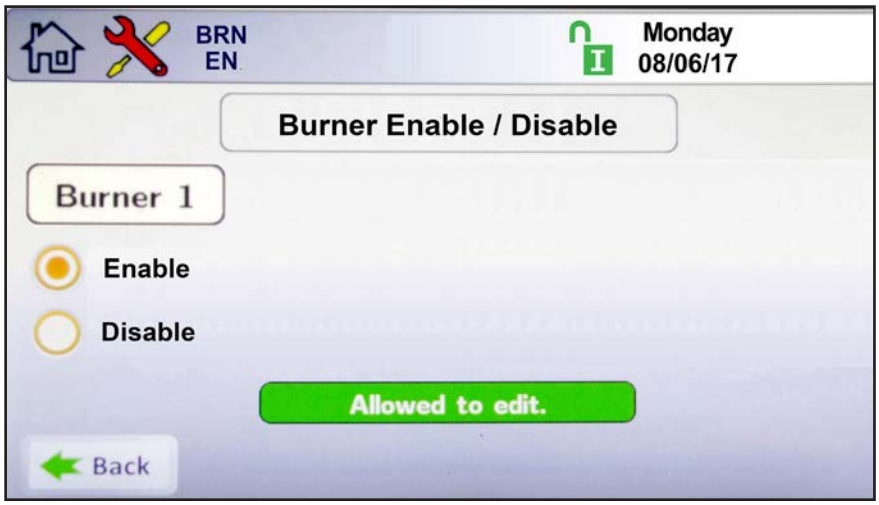

8.E.2 Digital I/O (Input / Output)

There are two screen associated with the Digital I/O: Digital I/O Screen-Inputs; Digital I/O Screen-Outputs.

Navigate to the Digital I/O Screen by touching the **Digital I/O** Button on the Service Screen.

Digital I/O Inputs: The indicator light associated with the input is green when the input is satisfied. For example, if there is adequate flow, the flow switch is satisfied, and the flow switch digital input indicator light is green. The indicator light associated with the input is red, when the input is not satisfied. For example, if the blower is off, the air proving switch is not satisfied and the air proving switch digital input indicator light is red.

Inputs

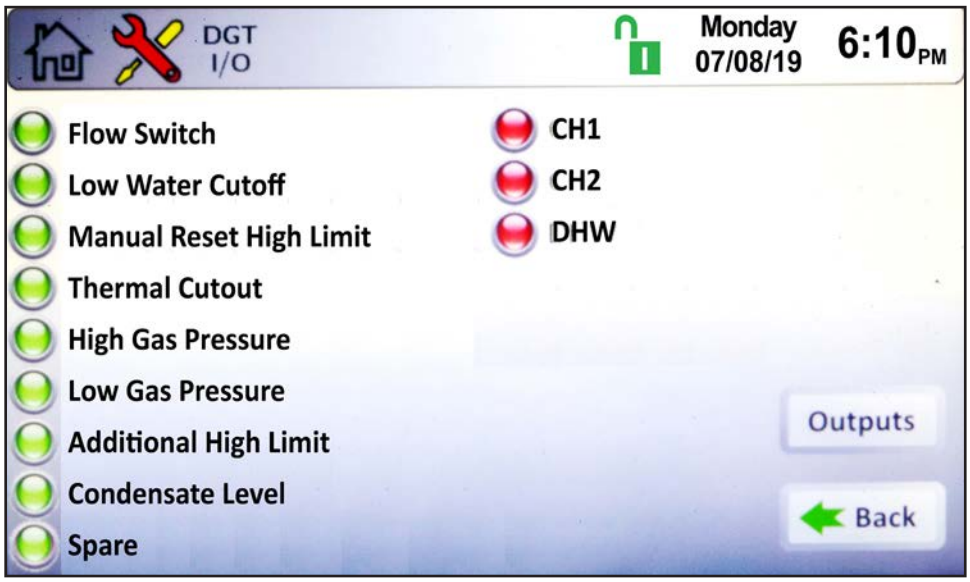

Digital I/O Outputs: The output is on, the indicator light associated with that output is green. For example, if the boiler pump is running, the boiler pump output indicator light is green. If the output is off, the indicator light associated with that output is red. For example, if there is no call for heat, the gas valves are off, and the gas valve indicator lights are red.

Outputs

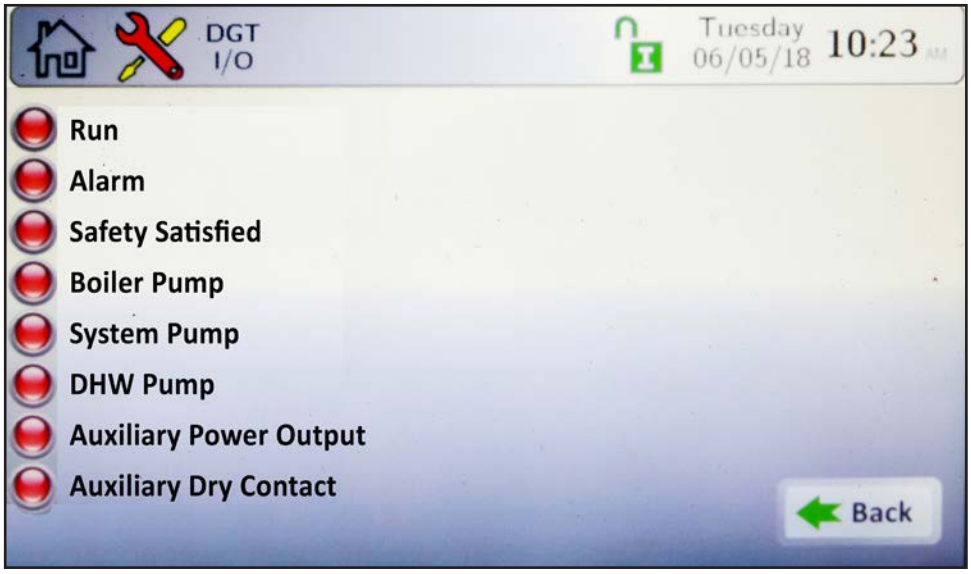

8.E.3 Analog I/O

Navigate to the Analog I/O Screen by touching the **Analog I/O** Button on the Service Screen.

There are two screens associated with the Analog I/O: Analog I/O Inputs; Analog I/O Outputs.

Analog I/O Input: There are three types of analog inputs; temperature sensors, flame signal, and voltage/current (VDC/mA). Wiring of these inputs are covered in SECTION 7

NOTE: If the input is not attached, the value will be zero.

Inputs

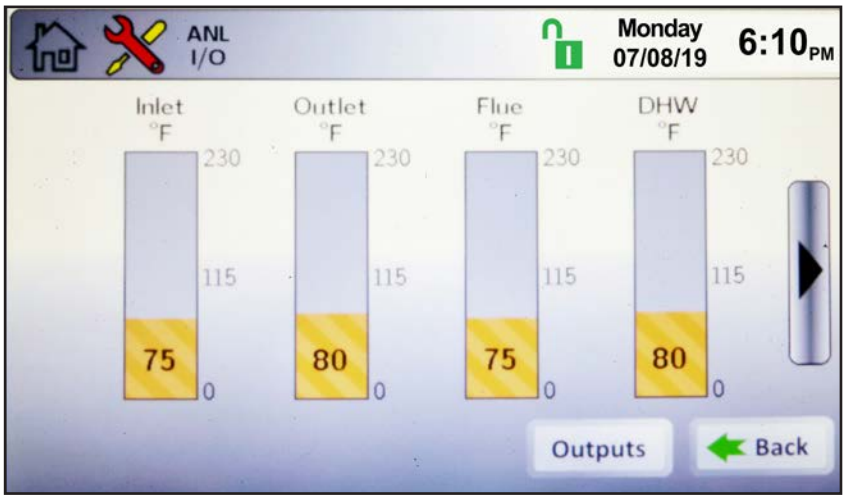

Outputs

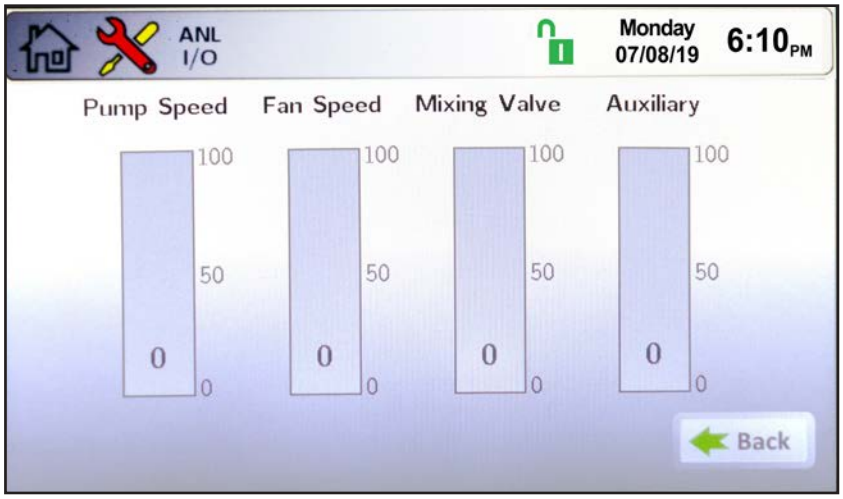

8.E.4 Screen Settings Timeout

Navigate to Screen Settings by touching the **Screen** Button on the Service Screen.

There are two adjustable screen settings: Light Timeout and AutoLock Timeout.

- Light Timeout allows the user to adjust the amount of time the touch screen backlight will remain lit after user interaction has ceased.
- AutoLock Timeout allows the user to adjust the amount of time the touch screen will remain unlocked with no user interaction.

8.E.5 History

Navigate to the History Screen by touching the **History** Button on the Service Screen.

The History Screen provides information on boiler operations and cycle counts. The control accumulates and displays the number of heat demand cycles, burner cycles, and pump cycles. It displays the 10 most recent lock-out conditions, unit temperatures, and firing statistics.

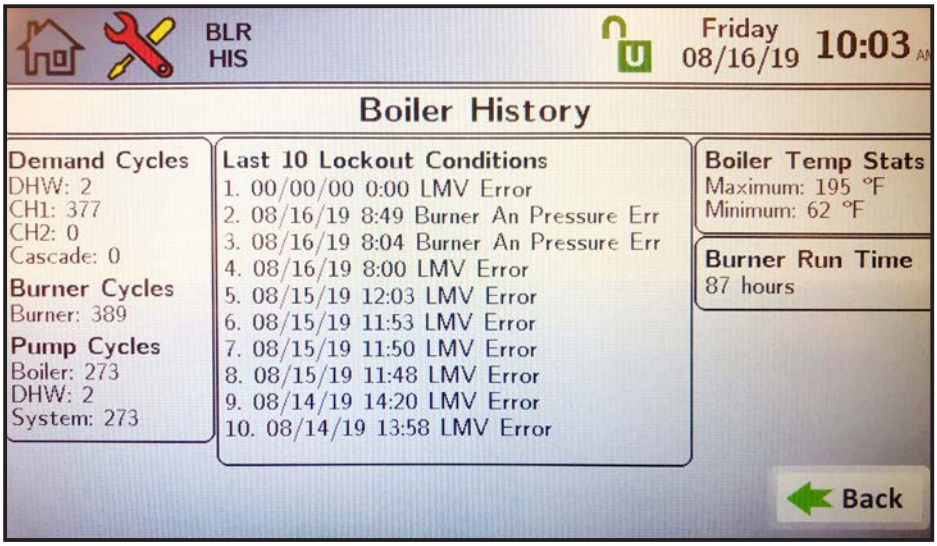

8.E.6 Restart Touchscreen & Recalibrate

Touching the **Restart** Button on the Service Screen reboots the display. If the touchscreen seems to be out of alignment, it can be recalibrated by pressing the Restart Button, promptly touching (and holding) the touch screen. Follow the calibration procedure as shown on the touch screen.

8.E.7 Factory Reset

Touching the Factory Reset Button on the Service Screen resets all touch screen adjustable parameters back to the factory default setting.

8.E.8 HMI Model OEM only.

8.E.9 BIC Model OEM only

.

8.E.10 Both Model OEM only.

8.E.11 About About the Firmware version of the touchscreen.

8.E.12 Pilot Test To manually test the pilot. This is an Enable / Disable menu. .

8.F Messages and USB

8.F.1 Messages

The 'Messages' icon at the bottom of the home screen displays an 'Exclamation Point' when messages are present. Press the icon to see the message(s).

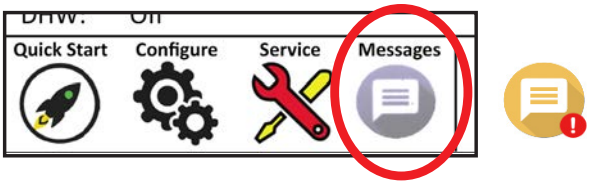

8.F.2 USB Functionality

The USB port is on the back of the display. To access it, open both panels and look for the black USB cable extending from the back of the display. See Figure 44.

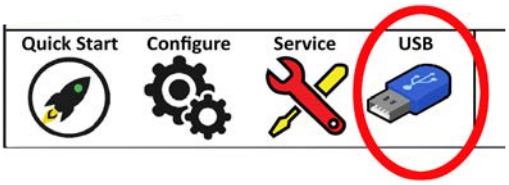

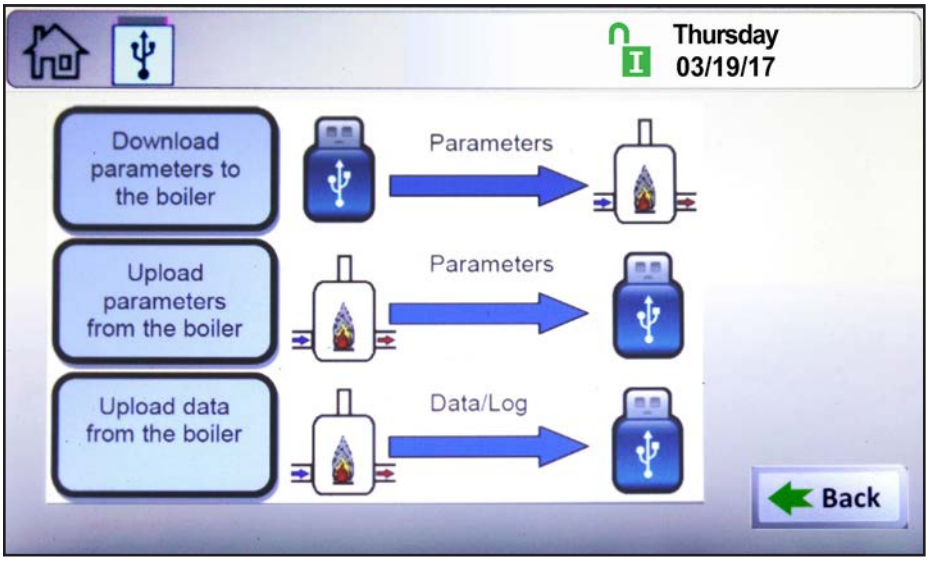

When the USB icon has appeared over the Message icon, press the USB icon to access the USB menu. The following three tasks will be available:

- **Download Parameters from the boiler:** During a cascade setup or a control replacement, enter the values in one unit, to copy into the others.
- **Upload Parameters from the boiler:** Uploads all parameters and settings into a thumb drive for documentation purposes, or copies these settings from unit to unit.
- **Upload Data from the boiler:** This is used to retrieve runtime data, and history. It captures all settings in a tab delimited text file, for use with spreadsheet programs.

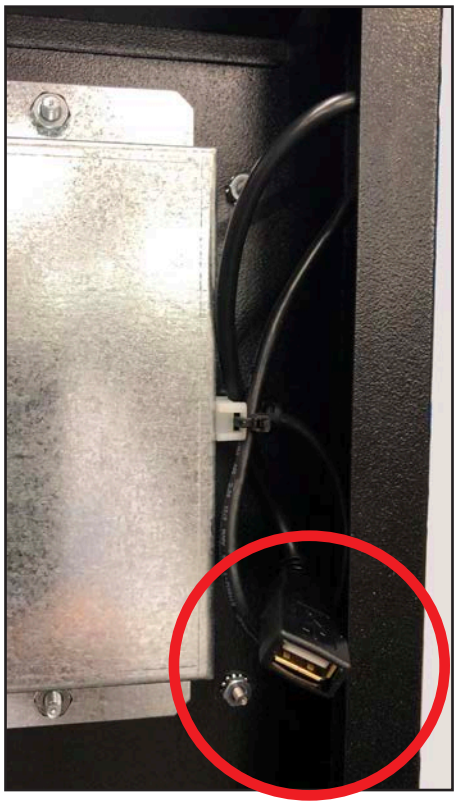

Figure 44. Photo of USB Slot on the back of touchscreen display.

8.G Active Demands

The Active Demand Window indicates the status of active heat demands.

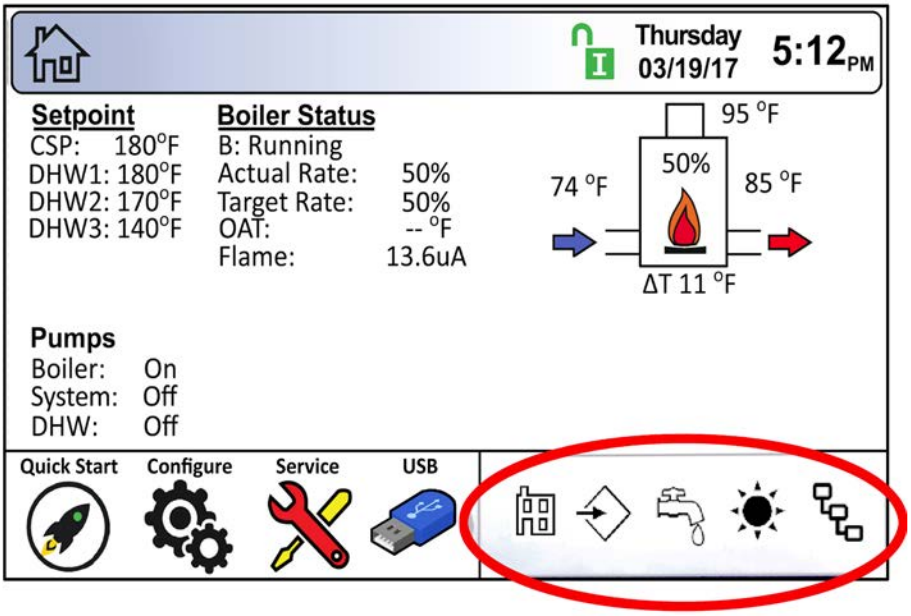

A black heat demand icon indicates the heat demand that is currently being satisfied. A "greyed out" heat demand icon is either lower in priority than the heat demand that is currently being satisfied, or the heat demand has reached set point, but remains active.

Icon	Demand
	CH1/2 or DHW1/2
	DHW or DHW3
	External
	Warm Weather Shutdown **NOTE:** Warm Weather Shutdown is not a heat demand. This icon indicates that a space heating demand is disabled due to high outdoor ambient temperature.
	Cascade

Table 22. Demand Examples

SECTION 9 Parameter Tables (MGH and MGV)

Table 23. MGH (Boiler) Parameter and Range Table (next 3 pages)

Boilers	User	Installer	Minimum	Maximum	Default	Unit
Time & Date						
Hour	x	x	NA	NA	NA	Hour
Minute	x	x	NA	NA	NA	Minute
Month	x	x	NA	NA	NA	Month
Day	x	x	NA	NA	NA	Day
Year	x	x	NA	NA	NA	Year
CH1						
CH1 Enable/Disable		x	Disable	Enable	Enable	N/A
CH1 Setpoint	x	x	40 F	210 F	180 F	°F/C
CH1 Priority		x	1	5	2	N/A
CH1 On Hysteresis		x	0 F	20 F	10 F	°F/C
CH1 Off Hysteresis		x	0 F	20 F	10 F	°F/C
CH1 Proportional Gain		x	0	10	5	N/A
CH1 Integral Time		x	0	10	2	Seconds
CH1 Derivative Time		x	0	10	0	Seconds
Max Power		x	50%	100%	100%	%
CH2						
CH2 Enable/Disable		x	Disable	Enable	Enable	N/A
CH2 Setpoint	x	x	40 F	210 F	170 F	°F/C
CH2 Priority		x	1	5	3	N/A
CH2 On Hysteresis		x	0 F	20 F	10 F	°F/C
CH2 Off Hysteresis		x	0 F	20 F	10 F	°F/C
CH2 Proportional Gain		x	0	10	5	N/A
CH2 Integral Time		x	0	10	2	Seconds
CH2 Derivative Time		x	0	10	0	Seconds
Max Power		x	50%	100%	100%	%
DHW						
DHW Enable/Disable		x	Disable	Enable	Enable	N/A
DHW Setpoint	x	x	40 F	200 F	180 F	°F/C
DHW Priority		x	1	5	1	N/A
DHW On Hysteresis		x	0 F	20 F	10 F	°F/C
DHW Off Hysteresis		x	0 F	20 F	10 F	°F/C
DHW Proportional Gain		x	0	10	5	N/A
DHW Integral Time		x	0	10	2	Seconds
DHW Derivative Time		x	0	10	0	Seconds
DHW Offset	x	x	0 F	40 F	20 F	°F/C
Max Power		x	50%	100%	100%	%
Outdoor Reset						
Outdoor Reset Enable/Disable		x	Disable	Enable	Disable	N/A
Maximum Outdoor Temperature		x	0 F	140 F	65 F	°F/C
Minimum Outdoor Temperature		x	-40 F	100 F	0 F	°F/C
Maximum Water Temperature		x	40 F	210 F	180 F	°F/C
Minimum Water Temperature		x	40 F	210 F	120 F	°F/C
Cascade CH						
Address		x	0	8	0	N/A
Dynamic Address		x	0	8	0	N/A
Lost Lead Backup Setpoint		x	40 F	210 F	180 F	°F/C
Lag On Hysteresis		x	0 F	20 F	10 F	°F/C
Lag Off Hysteresis		x	0 F	20 F	10 F	°F/C
Cascade CH Setpoint	x	x	40 F	210 F	180 F	°F/C
Cascade CH Proportional Gain		x	0	10	5	N/A
Cascade CH Integral Time		x	0	10	2	Seconds
Cascade CH Derivative Time		x	0	10	0	Seconds
Cascade CH Priority		x	1	5	4	N/A

Boilers	User	Installer	Minimum	Maximum	Default	Unit
Cascade CH On Hysteresis		x	0 F	20 F	10 F	°F/C
Cascade CH Off Hysteresis		x	0 F	20 F	10 F	°F/C
Cascade CH Maximum Lag Temperature		x	40 F	210 F	180 F	°F/C
Base Load		x	40%	100%	65%	%
Drop Load		x	20%	100%	20%	%
Min On Time		x	30 secs	600 secs	60 secs	Seconds
Min Off Time		x	30 secs	600 secs	30 secs	Seconds
Cascade Redundancy						
Loss of Lead Setup		x	Disable	Boiler Internal Setpoint/ Redundant Lead	Disable	N/A
Hybrid						
Hybrid Enable/Disable		x	Disable	Enable	Disable	N/A
Hybrid Lag Mode		x	Disable	Enable	Disable	N/A
Hybrid Setpoint	x	x	80 F	180 F	130 F	°F/C
Hybrid Differential		x	5 F	20 F	10 F	°F/C
Hybrid Delay		x	0 min	720 min	30 min	Minute
Pump Configuration						
Boiler Pump Control		x	Auto	Auto/ Always On/ Off During DHW	Auto	N/A
Boiler Pump Post Circulation		x	0 secs	600 secs	60 secs	Seconds
DHW Pump Control		x	Disable	Auto/ Always On	Auto	N/A
DHW Pump Post Circulation		x	0 secs	600 secs	60 secs	Seconds
System Pump Control		x	Disable	Auto/ Always On/ Off During DHW	Auto	N/A
System Pump Post Circulation		x	0 secs	600 secs	60 secs	Seconds
Variprime						
Pump On Delay Timer		x	0 secs	120 secs	60 secs	Seconds
Proportional Gain		x	0	32767	20	N/A
Integral Time		x	0	32767	1	Seconds
Derivative Time		x	0	32767	0	Seconds
Pump Minimum Speed		x	0 mV	4000 mV	2000 mV	milli-Volt
Pump Maximum Speed		x	6000 mV	10000 mV	10000 mV	milli-Volt
Pump Off Delay Timer		x	0 secs	600 secs	60 secs	Seconds
Delta Temperature		x	0 F	45 F	20 F	°F/C
Firing Rate						
Enable Burner		x	Disable	Enable	Disable	N/A
Fan Speed		x	Minimum	Maximum	Minimum	%
Temperature Limits						
Auto Reset Boiler Outlet		x	100 F	210 F	195 F	°F/C
Manual Reset Boiler Outlet		x	100 F	210 F	200 F	°F/C
Reset Differential		x	1 F	10 F	5 F	°F/C
Flue temp Min		x	195 F	220 F	205 F	°F/C
Flue temp Max		x	195 F	220 F	220 F	°F/C
Manual Reset Flue		x	195 F	220 F	220 F	°F/C
Outlet Temp Min		x	180 F	210 F	190 F	°F/C
Outlet Temp Max		x	190 F	210 F	195 F	°F/C
Delta T Limits						
Delta T Minimum Temperature		x	0 F	70 F	50 F	°F/C
Delta T Maximum Temperature		x	0 F	70 F	60 F	°F/C
Delta T Enable/Disable		x	Disable	Enable	Enable	N/A
External Control						
Control Mode		x	Disable	Extenal Setpoint/ Firing	Disable	N/A

Boilers	User	Installer	Minimum	Maximum	Default	Unit
External Control Priority		x	1	5	5	N/A
Maximum Setpoint		x	40 F	210 F	180 F	°F/C
Minimum Setpoint		x	40 F	210 F	110 F	°F/C
Maximum Firing Rate		x	20%	100%	100%	%
Minimum Firing Rate		x	20%	100%	20%	%
Demand Max		x	0%	100%	100%	%
Demand Min		x	0%	100%	20%	%
Demand On		x	0%	25%	15%	%
Demand Off		x	0%	25%	10%	%
Input Type		x	N/A	0-10 VDC/ 4-20 mA	0-10 VDC	VDC/mA
Anti- Frost						
Anti Frost Mode		x	Disable	Pump Only/ Pump & Burner	Pump Only	N/A
Anti- Frost Setpoint		x	32 F	120 F	40 F	°F/C
Anti- Frost Hysteresis		x	2 F	10 F	5 F	°F/C
Anti- Frost Pump Control		x	NA	Boiler/ DHW/ System	Boiler	N/A
Warm Weather Shutdown						
Temperature Minimum		x	50 F	140 F	90 F	°F/C
Temperature Maximum		x	50 F	140 F	95 F	°F/C
Feature Options		x	Disable	Shutdown Immediately/	Shutdown	N/A
Summer Kick CH		x	0 secs	600 secs	300 secs	Seconds
Summer Kick DHW		x	0 secs	600 secs	300 secs	Seconds
Summer Kick System		x	0 secs	600 secs	300 secs	Seconds
Summer Kick Period		x	10 min	2000 min	1440 min	Minute
Anti- Short Cycle Time						
Cycle Time		x	0 secs	240 secs	60 secs	Seconds
Temperature Conversion						
Conversion Unit		x	Celsius	Fahrenheit	Fahrenheit	°F/C
COM Port Options						
Protocol		x	N/A	Modbus / BACnet	BACnet	N/A
Baudrate		x	9600	76800	76800	Bits/Second
Address		x	0	255	127	N/A
Device Model Name		x	NA	NA	NA	N/A
Device Object Name		x	NA	NA	NA	N/A
Object Instance		x	0	4194303	600000	N/A
Timeout		x	0 secs	300 secs	300 secs	Seconds
Service						
Burner Enable/Disable		x	Disable	Enable	Enable	N/A
Screen Settings						
Light Timeout	x	x	0 secs	3600 secs	600 secs	Seconds
AutoLock Timeout	x	x	0 secs	3600 secs	600 secs	Seconds
Pilot Test						
Enable Pilot Test		x	Disable	Enable	Disable	N/A

Table 24. MGV (Volume Water Heaters) Parameter and Range Table (next 3 pages)

Heater	User	Installer	Minimum	Maximum	Default	Units
Time & Date						
Hour	x	x	NA	NA	NA	Hour
Minute	x	x	NA	NA	NA	Minute
Month	x	x	NA	NA	NA	Month
Day	x	x	NA	NA	NA	Day
Year	x	x	NA	NA	NA	Year
DHW1						
DHW1 Enable/Disable		x	Disable	Enable	Enable	N/A
DHW1 Setpoint	x	x	40 F	200 F	180 F	°F/C
DHW1 Priority		x	1	5	2	N/A
DHW1 On Hysteresis		x	0 F	20 F	10 F	°F/C
DHW1 Off Hysteresis		x	0 F	20 F	10 F	°F/C
DHW1 Proportional Gain		x	0	10	5	N/A
DHW1 Integral Time		x	0	10	2	Seconds
DHW1 Derivative Time		x	0	10	0	Seconds
Max Power		x	50%	100%	100%	%
DHW2						
DHW2 Enable/Disable		x	Disable	Enable	Enable	N/A
DHW2 Setpoint	x	x	40 F	200 F	170 F	°F/C
DHW2 Priority		x	1	5	3	N/A
DHW2 On Hysteresis		x	0 F	20 F	10 F	°F/C
DHW2 Off Hysteresis		x	0 F	20 F	10 F	°F/C
DHW2 Proportional Gain		x	0	10	5	N/A
DHW2 Integral Time		x	0	10	2	Seconds
DHW2 Derivative Time		x	0	10	0	Seconds
Max Power		x	50%	100%	100%	%
DHW3						
DHW3 Enable/Disable		x	Disable	Enable	Enable	N/A
DHW3 Setpoint	x	x	40 F	200 F	140 F	°F/C
DHW3 Priority		x	1	5	1	N/A
DHW3 On Hysteresis		x	0 F	20 F	10 F	°F/C
DHW3 Off Hysteresis		x	0 F	20 F	10 F	°F/C
DHW3 Proportional Gain		x	0	10	5	N/A
DHW3 Integral Time		x	0	10	2	Seconds
DHW3 Derivative Time		x	0	10	0	Seconds
DHW3 Offset	x	x	0 F	40 F	20 F	°F/C
Max Power		x	50%	100%	100%	%
Outdoor Reset (NOT Available on Volume Water Units)						
Cascade DHW						
Address		x	0	8	0	N/A
Dynamic Address		x	0	8	0	N/A
Lost Lead Backup Setpoint		x	40 F	200 F	140 F	°F/C
Lag On Hysteresis		x	0 F	20 F	10 F	°F/C
Lag Off Hysteresis		x	0 F	20 F	10 F	°F/C
Cascade DHW Setpoint	x	x	40 F	200 F	140 F	°F/C
Cascade DHW Proportional Gain		x	0	10	5	N/A
Cascade DHW Integral Time		x	0	10	2	Seconds
Cascade DHW Derivative Time		x	0	10	0	Seconds
Cascade DHW Priority		x	1	5	4	N/A
Cascade DHW On Hysteresis		x	0 F	20 F	10 F	°F/C
Cascade DHW Off Hysteresis		x	0 F	20 F	10 F	°F/C
Cascade DHW Max Lag Temperature		x	40 F	200 F	140 F	°F/C
Base Load		x	40%	100%	65%	%
Drop Load		x	20%	100%	20%	%

Heater	User	Installer	Minimum	Maximum	Default	Units
Min On Time		x	30 secs	600 secs	60 secs	Seconds
Min Off Time		x	30 secs	600 secs	30 secs	Seconds
Cascade Redundancy						
Loss of Lead Setup		x	Disable	Boiler Internal Setpoint/ Redundant Lead	Disable	N/A
Hybrid						
Hybrid Enable/Disable		x	Disable	Enable	Disable	N/A
Hybrid Lag Mode		x	Disable	Enable	Disable	N/A
Hybrid Setpoint	x	x	80 F	180 F	130 F	°F/C
Hybrid Differential		x	5 F	20 F	10 F	°F/C
Hybrid Delay		x	0 min	720 min	30 min	Minutes
Pump Configuration						
Boiler Pump Control		x	Auto	Auto/ Always On/ Off During DHW	Auto	N/A
Boiler Pump Post Circulation		x	0 secs	600 secs	60 secs	Seconds
DHW Pump Control		x	Disable	Auto/ Always On	Auto	N/A
DHW Pump Post Circulation		x	0 secs	600 secs	60 secs	Seconds
System Pump Control		x	Disable	Auto/ Always On/ Off During DHW	Auto	N/A
System Pump Post Circulation		x	0 secs	600 secs	60 secs	Seconds
Variprime (NOT Available on Volume Water Units)						
Firing Rate						
Enable Burner		x	Disable	Enable	Disable	N/A
Fan Speed		x	Minimum	Maximum	Maximum	N/A
Temperature Limits						
Auto Reset Boiler Outlet		x	100 F	210 F	195 F	°F/C
Manual Reset Boiler Outlet		x	100 F	210 F	200 F	°F/C
Reset Differential		x	1 F	10 F	5 F	°F/C
Flue temp Min		x	195 F	220 F	205 F	°F/C
Flue temp Max		x	195 F	220 F	220 F	°F/C
Manual Reset Flue		x	195 F	220 F	220 F	°F/C
Outlet temp Min		x	180 F	210 F	190 F	°F/C
Outlet temp Max		x	190 F	210 F	195 F	°F/C
Delta T Limits						
Delta T Minimum Temperature		x	0 F	70 F	50 F	°F/C
Delta T Maximum Temperature		x	0 F	70 F	60 F	°F/C
Delta T Enable/Disable		x	Disable	Enable	Enable	N/A
External Control						
Control Mode		x	Disable	Extenal Setpoint/ Firing Rate	Disable	N/A
External Control Priority		x	1	5	5	N/A
Maximum Setpoint		x	40 F	210 F	180 F	°F/C
Minimum Setpoint		x	40 F	210 F	110 F	°F/C
Maximum Firing Rate		x	20%	100%	100%	%
Minimum Firing Rate		x	20%	100%	20%	%
Demand Max		x	0%	100%	100%	%
Demand Min		x	0%	100%	20%	%
Demand On		x	0%	25%	15%	%
Demand Off		x	0%	25%	10%	%
Input Type		x	N/A	0-10 VDC / 4-20mA	0-10 VDC	VDC/mA
Anti- Frost						

Heater	User	Installer	Minimum	Maximum	Default	Units
Anti Frost Mode		x	Disable	Pump Only/ Pump & Burner	Pump Only	N/A
Anti- Frost Setpoint		x	32 F	120 F	40 F	°F/C
Anti- Frost Hysteresis		x	2 F	10 F	5 F	°F/C
Anti- Frost (continued)						
Anti- Frost Pump Control		x	NA	Boiler/ DHW/ System	Boiler	N/A
Warm Weather Shutdown (NOT Available on Volume Water Units)						
Anti- Short Cycle Time						
Cycle Time		x	0 secs	240 secs	60 secs	Seconds
Temperature Conversion						
Conversion Unit		x	Celsius	Fahrenheit	Fahrenheit	°F/C
Com Port Options						
ProtoCol		x	N/A	Modbus / BACnet	BACnet	N/A
Baudrate		x	9600	76800	76800	Bits/Second
Address		x	0	255	127	N/A
Device Model Name		x	NA	NA	NA	N/A
Device Object Name		x	NA	NA	NA	N/A
Object Instance		x	0	4194303	600000	N/A
Timeout		x	0 secs	300 secs	300 secs	Seconds
Service						
Burner Enable/Disable		x	Disable	Enable	Enable	N/A
Screen Settings						
Light Timeout	x	x	0 secs	3600 secs	600 secs	Seconds
AutoLock Timeout	x	x	0 secs	3600 secs	600 secs	Seconds
Pilot Test						
Enable Pilot Test		x	Disable	Enable	Disable	N/A

SECTION 10 Initial startup Instructions

10.A Filling the Boiler System

1. Ensure the system is fully connected. Close all bleeding devices and open the make-up water valve. Allow the system to fill slowly.
2. If a make-up water pump is employed, adjust the pressure switch on pumping system to provide a minimum of 12 psi (81.8 kPa) at the highest point in the heating loop.
3. If a water pressure regulator is provided on the make-up water line, adjust the pressure regulator to provide at least 12 psi (81.8 kPa) at the highest point in the heating loop.
4. Open any bleeding devices on all radiation units at the high points in the piping throughout the system, unless automatic air bleeders are provided at those points.
5. To remove all air from the heat exchanger, cycle the boiler pump on and off 10 times (10 seconds on and 10 seconds off). Then run the system and boiler pumps for a minimum of 30 minutes with the gas shut off.

NOTE: There are three (3) air bleeds located on top of the water manifolds.

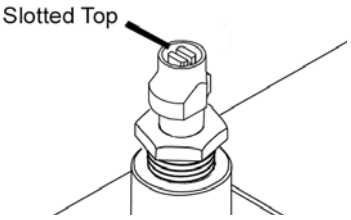

⚠ WARNING

Failure to remove all air from the heat exchanger could Lead to property damage, severe injury or death.

6. Open all strainers in the circulating system, check the operation of the flow switch (if equipped), and check for debris. If debris is present, clean out the strainers to ensure proper circulation.
7. Check the liquid level in the expansion tank. With the system full of water and under normal operating pressure, the level of water in the expansion tank should not exceed ¼ of the total with the balance filled with air.
8. Start up the boiler following the procedure in this manual. Operate the entire system, including the pump, boiler, and radiation units for one hour.
9. Recheck the water level in the expansion tank. If the water level exceeds ¼ of the volume of the expansion tank, open the tank drain, and drain to that level.
10. Shut down the entire system and vent all radiation units and high points in the system piping, as described in Step 4.
11. Close the make-up water valve. Check the strainer in the pressure reducing valve for sediment or debris from the make-up water line. Reopen the make-up water valve.
12. Check the gauge for correct water pressure and also check the water level in the system. If the height indicated above the boiler ensures that water is at the highest point in the circulating loop, then the system is ready for operation.
13. Refer to local codes and the make-up water valve manufacturer's instructions as to whether the make-up water valve should be left open or closed.
14. Press the reset on the low pressure switch.
15. After placing the unit in operation, the ignition system safety shutoff device must be tested.

    First, shut off the manual gas valve, and then call the unit for heat. The main gas terminals will be energized and attempting to light for five seconds and then will de-energize. The unit will go into lockout after the required number of trials for ignition periods.

    Second, press the manual reset button on the boiler control, or the user display, open the manual gas valve and allow the unit to light. While the unit is operating, close the manual gas valve and ensure that power to the main gas valve has been cut.
16. Within three (3) days of start up, recheck all air bleeders and the expansion tank as described previously in Steps 4 and 8.

NOTE - The installer is responsible for identifying to the owner/operator the location of all emergency shutoff devices.

⚠ WARNING

Do not use this unit if any part has been under water. Immediately call a qualified service technician to inspect the unit and to replace any part of the control system and any gas control that may have been under water.

10.B Initial Operation

The initial setup must be checked before the unit is put into operation. Problems such as failure to start, rough ignition, strong exhaust odors, etc. can be due to improper setup. Damage to the boiler resulting from improper setup is not covered by the limited warranty.

10.B.1 Initial Burner Operation

1. Using this manual, make sure the installation is complete and in full compliance with the instructions and all local codes.
2. Determine that the unit and system are filled with water and all air has been bled from both. Open all valves.
3. Observe all warnings on the Operating Instructions label and turn on gas and electrical power to the unit. It may be neccesary to reset the low pressure switch.

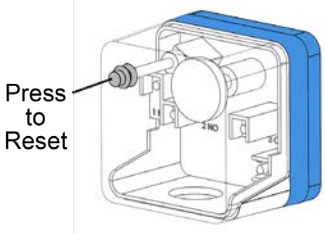

4. The unit will enter the start sequence. The blower and pump will energize for pre-purge, then the ignition sequence will start. After all safety devices are verified, the gas valve will open.
   If ignition doesn't occur, turn off the unit. Check that there is proper supply of gas. Wait five minutes and start the unit again.
5. If ignition starts normally, leave the unit turned on.
6. After placing the unit into operation, the burner safety shutoff device must be tested:

   (a) Close the gas shutoff valve with the burner operating.

   (b) The flame will go out, and the blower will continue to run for the post purge cycle. A few additional attempts to light will follow including pre-purge, ignitor on, valve/flame on and post purge. Ignition will not occur because the gas is turned off. The ignition control will lockout.

   (c) Open the gas shutoff valve. Reset the boiler control by pressing the Reset button on the control. Restart the unit. The ignition sequence will start again and the burner will start. The unit will return to its previous mode of operation.

⚠ WARNING

If any odor of gas is detected, or if the gas burner does not appear to be functioning in a normal manner, ***close the main gas shutoff valve***. Do not shut off the power switch. Contact your heating contractor, gas company, or factory representative.

⚠ WARNING

Improper adjustment may Lead to poor combustion quality, increasing the amount of carbon monoxide produced. Excess carbon monoxide levels may Lead to personal injury or death.

10.B.2 Combustion Setup Procedure

This section describes how to make adjustments to the main gas valve for proper combustion at both high and low fire conditions.

Required tools: Screwdrivers, Torx bits, Allen Wrench Set, Combustion Analyzer

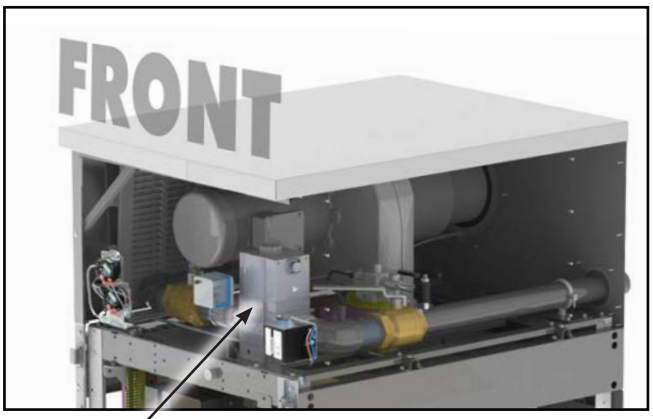

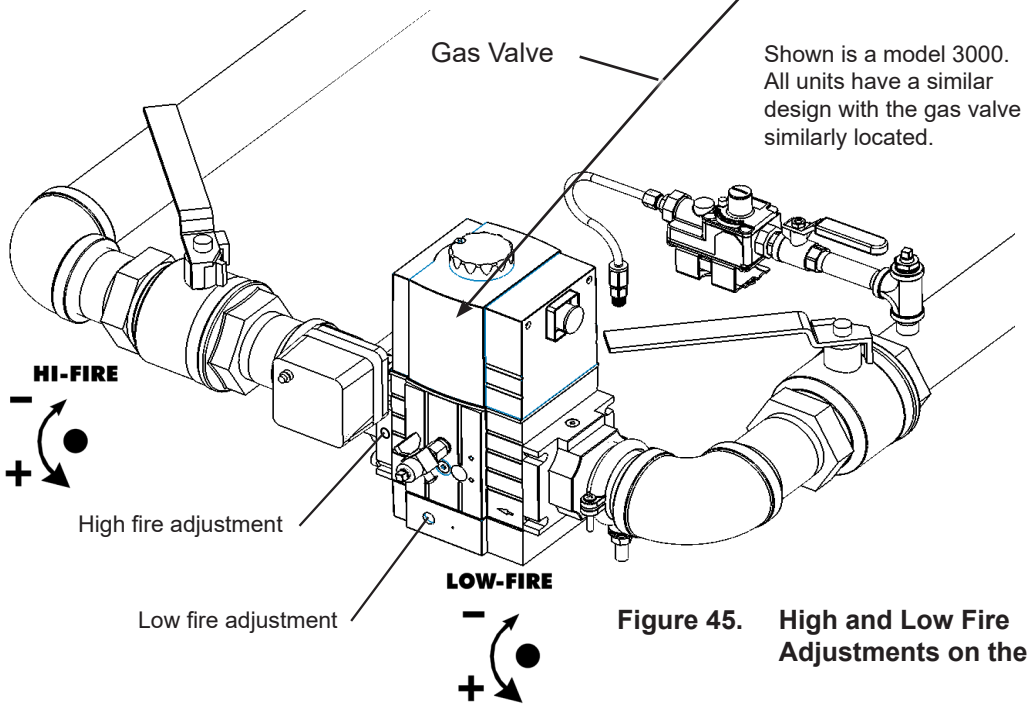

Figure 45. High and Low Fire Adjustments on the Gas Valve

1. Refer to Figure 41 to locate the adjustments for high fire throttle and low fire offset on the main gas valve.
2. On the touchscreen, login with Installer level credentials.
3. Navigate to the Firing Rate screen from the Configure screen, and Enable the Burner as shown in the image below.

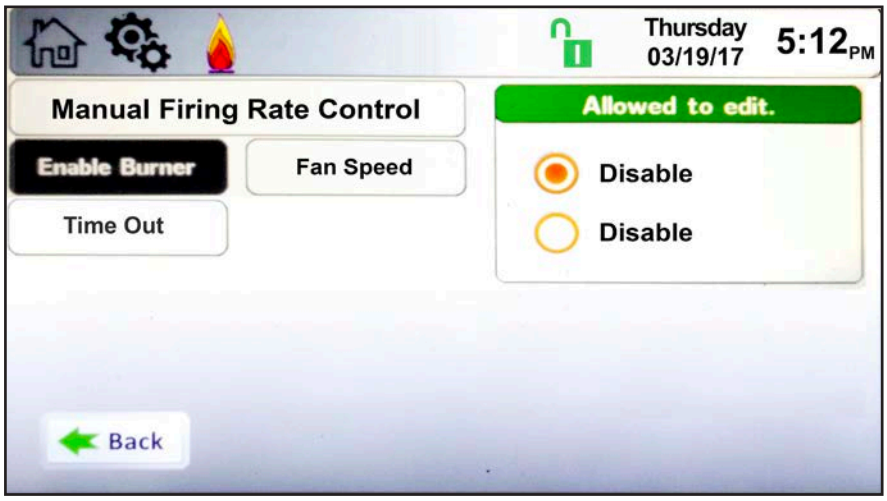

4. Also at the Firing Rate screen, set the Fan Speed to Maximum as shown in the image below.

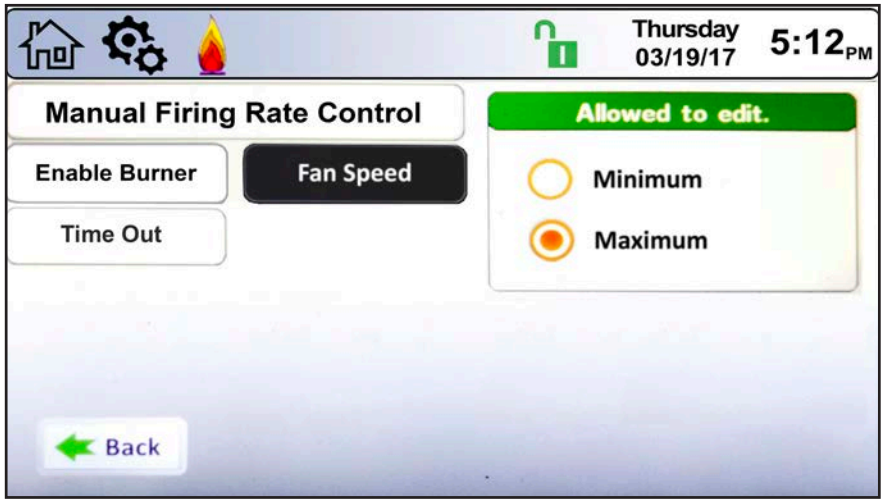

5. Provide a call for heat to the TT-1 terminals (terminal 37 and 38) and allow the system to transition to run mode.
6. Once in run mode and firing at 100%, see image below, using a combustion analyzer, adjust the high fire adjustment screw on the main gas valve to obtain the correct CO2 measurement shown in Table 23. If the CO2 measurement is high, consult the factory for assistance.

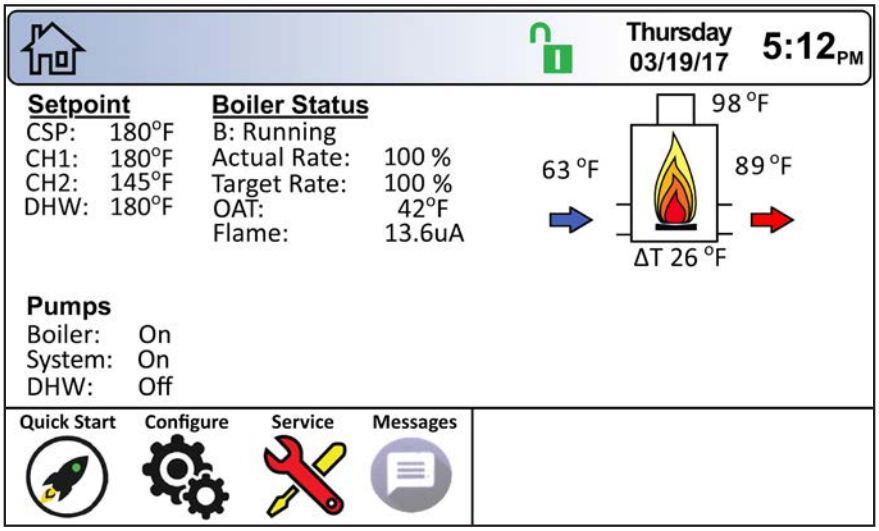

7. While running at the full firing rate, ensure the gas fuel pressure at the inlet to the boiler is equal to or greater than 4” w.c. If the gas pressure is greater than 14” w.c., turn off the main shut-off gas valve upstream of the boiler and, as necessary, adjust or replace the fuel regulating components.
8. Once CO2 at high fire is properly adjusted, navigate to the Firing Rate screen and set the Fan Speed to Minimum as show in the image below.

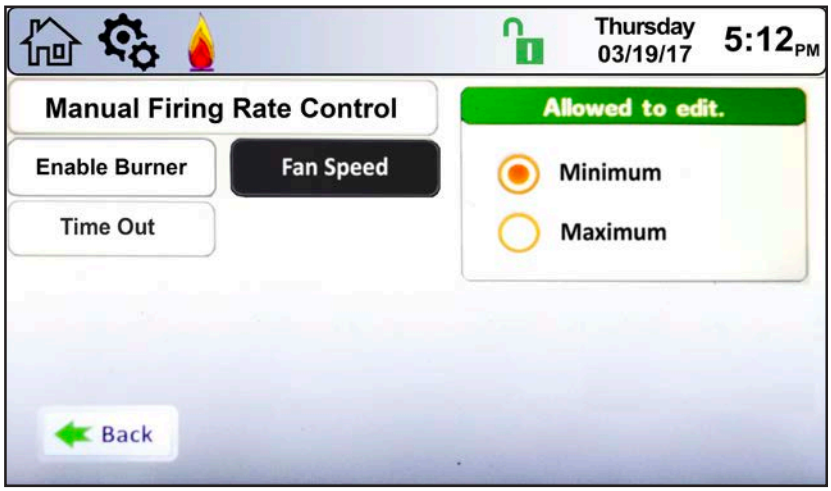

9. Allow the unit the stabilize at the minimum firing rate, see image below. Using a combustion analyzer, observe the CO2 readings and adjust the low fire adjustment screw on the main gas valve to obtain the correct low fire CO_2 measurement shown in Table 23. Consult the factory if the CO_2 reading is above the specified value in the table.

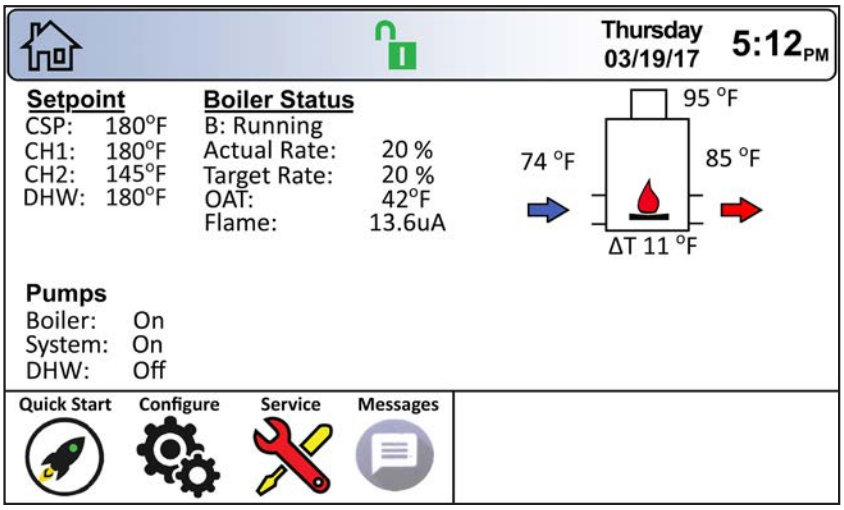

10. Remove the heat demand applied at the TT-1 terminals.

11. Navigate to the Firing Rate screen and disable the burner.

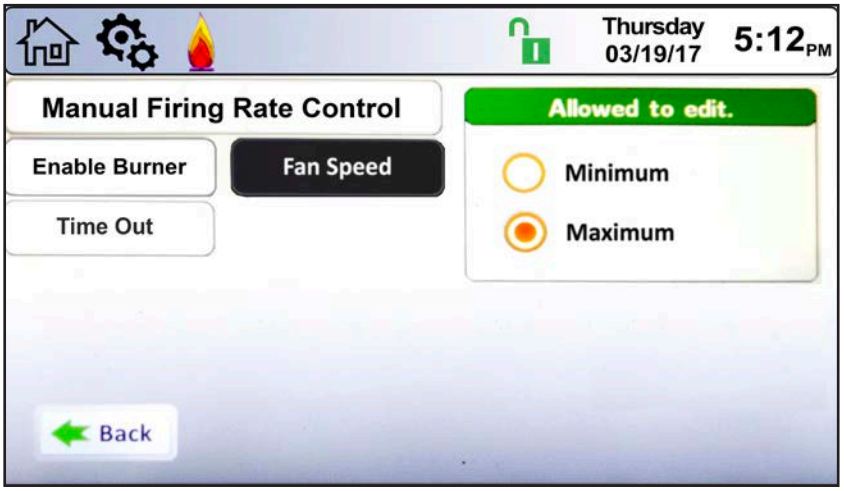

Model	Gas Type	High Fire CO_2	Low Fire CO_2	Pressure Differential
1,600	Natural	9.0% ± 0.2	.25 lower than high fire CO_2	0.5” to 1.2” wc*
	Propane	10.0% ± 0.2	.25 lower than high fire CO_2	0.5” to 1.2” wc*
2,000	Natural	9.0% ± 0.2	.25 lower than high fire CO_2	0.5” to 1.2” wc*
	Propane	10.0% ± 0.2	.25 lower than high fire CO_2	0.5” to 1.2” wc*
2,500	Natural	9.0% ± 0.2	.25 lower than high fire CO_2	0.9” to .09” wc
	Propane	10.0% ± 0.2	.25 lower than high fire CO_2	0.9” to .09” wc
3,000	Natural	9.0% ± 0.2	.25 lower than high fire CO_2	0.5” to 1.2” wc
	Propane	10.0% ± 0.2	.25 lower than high fire CO_2	0.5” to 1.2” wc
3,500	Natural	9.0% ± 0.2	.25 lower than high fire CO_2	0.5” to 1.2” wc*
	Propane	10.0% ± 0.2	.25 lower than high fire CO_2	0.5” to 1.2” wc*
4,000	Natural	9.0% ± 0.2	.25 lower than high fire CO_2	0.5” to 1.2” wc*
	Propane	10.0% ± 0.2	.25 lower than high fire CO_2	0.5” to 1.2” wc*

*Only check the Pressure Differential if there are problems getting the CO_2 in range.

Table 25. Combustion Settings.

10.C Shutting Down the Unit

This step must be performed by a qualified service person.

1. Turn off the main electrical disconnect switch.
2. Close all manual gas valves.
3. If freezing is anticipated, drain the unit and be sure to also protect the building piping from freezing. All water must be removed from the heat exchanger or damage from freezing may occur.

10.D Restarting the Unit

If the system has been drained, see 10.A for instructions on proper filling and purging.

1. Turn off the main electrical disconnect switch.
2. Close all manual gas valves.
3. ***Wait five minutes.***
4. Set the aquastat or thermostat to its lowest setting.
5. Open all manual gas valves.
6. Reset all safety switches (pressure switch, manual reset high limit, etc.).
7. Set the temperature controller to the desired temperature setting and switch on the electrical power.
8. The unit will go through a prepurge period and ignitor warm-up period, followed by ignition.

10.E Sequence of Operation

Standby

Upon power-up, the boiler/heater enters Standby mode. Upon a call for heat, the boiler/heater transitions into Pre-purge Open.

10.E.1 Pre-purge Open

In Pre-purge Open mode, the blower is off and the boiler/heater confirms that since the blower is off, the air proving switch (APS) is open. The gas valve and spark are off. The duration of this mode is defined by the Pre-Purge APS Max Open Time. If the APS is open, the boiler/heater will transition to the Pre-purge Closed mode. If the APS is closed, the boiler/heater transitions to Lock-out mode. If the call for heat is removed, the heater/boiler will transition to Standby mode.

10.E.2 Pre-purge Closed

In Pre-purge Closed mode, the boiler/heater blower will turn on and run at Pre-Purge Speed. The boiler/heater verifies that the APS transitions from open to closed. The gas valve and spark are off. The duration of this mode is defined by the Pre-Purge APS Closed Time. If the APS closes and the Pre-Purge APS Closed Time expires, the boiler/heater will transition to Transition to Pre-Ignition mode. If the APS remains open, or if there is a separate lock-out condition, the boiler/heater transitions to the Lock-out mode. If the call for heat is removed, the boiler/heater will transition to Standby mode.

NOTE: The duration of pre-purge is established to ensure proper evacuation of any unspent fuel in the combustion chamber and flue collector.

10.E.3 Transition to Pre-Ignition

In Transition to Pre-Ignition mode, the boiler/heater blower will modulate to the Ignition Speed. The gas valve and spark are off. Once the blower is maintaining the Ignition Speed, the heater/blower will transition to Pre-Ignition mode.

NOTE: The purpose of Transition to Pre-Ignition is to allow time for the blower to ramp down to the Ignition Speed prior to Pre-Ignition.

10.E.4 Pre-Ignition

In Pre-Ignition the boiler/heater blower will maintain the Ignition Speed, the gas valve is off. The spark is energized for the duration of the Pre-Ignition Time. With the boiler/heater maintaining the Ignition Speed, once the Pre-Ignition Time expires, the heater/boiler will transition to Pilot Ignition mode. If there is a lock-out condition in this mode, the boiler/heater will transition to the Lock-out mode. If the call for heat is removed, the boiler/heater will transition to Standby mode.

10.E.5 Pilot Ignition

In Pilot Ignition mode, the blower continues to run at Ignition Speed and the main gas valve remains off. The spark continues to be energized and the pilot valve is energized. The pilot gas valve is energized for the duration of the Pilot Flame Establishing Period. The pilot flame must be observed and present above the lower flame threshold prior to the expiration of the Pilot Flame Establishing Period. After the Pilot Flame Establishing Period has expired and flame signal is equal to or above the Flame Signal Lower Threshold, the boiler transition to Main Ignition mode. If proper ignition does not occur, and the maximum attempts for ignition has not occurred, the boiler/heater will transition to Inter-Purge mode. If proper ignition does not occur, and the maximum attempts for ignition has been reached, the boiler/heater will transition to Lock-out mode. If the call for heat is removed, the boiler/heater will transition to Standby mode.

NOTE: Three attempts for ignition, prior to lock-out, is standard. CSD-1 units have a single attempt for ignition prior to lock-out.

10.E.6 Main Ignition

In Main Ignition mode, the blower continues to run at Ignition Speed, the spark is de-energized and the pilot valve remains energized. If the flame signal continues to be equal to or greater than the Flame Signal Lower Threshold, then the main gas valve is energized for the Main Flame Establishing Period. Proper ignition has occurred if the flame signal is greater than or equal to the Flame Signal Lower Threshold prior to the Main Flame Establishing Period expiring. If proper ignition has been established, the boiler/heater will transition to Run mode. If proper ignition does not occur, and the maximum attempts for ignition has not occurred, the boiler/heater will transition to Inter-Purge mode. If proper ignition does not occur, and the maximum attempts for ignition has been reached, the boiler/heater will transition to Lock-out mode. If the call for heat is removed, the boiler/heater will transition to Standby mode.

NOTE: Three attempts for ignition, prior to lock-out, is standard. CSD-1 units have a single attempt for ignition prior to lock-out.

10.E.7 Run

In Run mode, the blower will then modulate to the required speed (RPM or %) and the main gas valve remains energized. If there is a loss of flame during Run mode, the boiler/heater will transition to Inter-Purge mode. If a lock-out condition occurs during Run mode, the boiler/heater will transition to Lock-out mode. If the call for heat is removed, the boiler/heater will transition to the Post-Purge prior to returning to Standby mode.

Timer	Value	Description
Pre-Purge APS Max Open Time	5 seconds	The max time the boiler/heater will wait for the APS to close.
Pre-Purge APS Closed Time	30 seconds	The APS has to be closed for this amount of time prior to mode transition.
Pre-Ignition Time	10 seconds	With the blower at Ignition Speed, the spark will be on for this amount of time prior to mode transition.
Pilot Flame Establishing Period	10 seconds	After the pilot valve is energized, this is the maximum amount of time the boiler/heater will try to ignite the pilot prior to mode transition.
Main Flame Establishing Period	4 seconds	After the main valve is energized, this is the maximum amount of time the boiler/heater will try to ignite the main prior to mode transition.
Inter-Purge Timer	15 seconds	If the boiler/heater fails to ignite, and the maximum number of ignition attempts has not been exceeded, the boiler/heater will wait for the Inter-Purge Timer to expire prior to entering Pre-Ignition mode.
Post-Purge Timer	30 seconds	If the boiler/heater fails to ignite, and the maximum number of ignition attempts has been exceeded, the boiler/heater will keep the blower(s) on until the Post-Purge Timer has expired.
Flame Signal Lower Threshold	0.8 uAmps	Flame is considered absent if the flame signal is below the lower threshold

Table 26. Control Management Values and Descriptions

10.E.8 Inter-Purge

In Inter-Purge mode, the blower will modulate to Inter-purge Fan Speed and the gas valve(s) will de-energize. The boiler/heater will stay in Inter-Purge mode until the Inter-Purge Timer expires. Once the Inter-Purge Timer expires, the boiler/heater will transition to Pre-Ignition mode. If a lock-out condition occurs during Inter-Purge mode, the boiler/heater will transition to Lock-out mode. If the call for heat is removed during Inter-Purge, the boiler/heater will transition to Post-Purge mode prior to returning to Standby mode.

10.E.9 Post-Purge

In Post-Purge mode, the blower will run at the Post Purge Fan Speed, the spark and gas valve are off. The boiler/heater will stay in Post-Purge mode until the Post-Purge Timer expires. Once the Post-Purge Timer expires, the boiler/heater will transition to Standby mode.

NOTE: The duration of post-purge is established to ensure proper evacuation of any unspent fuel in the combustion chamber and flue collector.

10.E.10 Lock-out

In Lock-out mode, the blower will shut down, the spark and gas valve are off. The boiler/heater will stay in Lock-out mode until the Lock-out Timer expires and the lock-out condition has been manually reset. Once both conditions have been satisfied, the boiler/heater will transition to Standby mode.

SECTION 11 Maintenance

11.A System Maintenance

Do the following once a year:

1. Lubricate all the pumps in the system, per the instructions on the pump.
2. Inspect the venting system for obstruction or leakage. Periodically clean the screens in the vent terminal and combustion air terminal (when used).
3. Remove and inspect the air filter. Clean with soapy water if needed. Be sure that filter is dry before re-inserting back into air filter box. Replace air filter if damaged.
4. Keep the area around the unit clear and free of combustible materials, gasoline, or other flammable vapors or liquids.
5. If the unit is not going to be used for extended periods in locations where freezing normally occurs, it should be isolated from the system and completely drained of all water.
6. Low water cutoffs should be cleaned and inspected annually.
7. Inspect and clean the condensate collection, float switch and disposal system yearly.
8. Ensure that the condensate is being neutralized properly.
9. Inspect the flue passages and clean them using brushes or vacuums, if necessary. Sooting in flue passages indicates improper combustion. Determine the cause of the problem and correct it.
10. Inspect the vent system and air intake system and ensure that all joints are sealed properly. If any joints need to be resealed, follow venting manufacturer's instructions to clean and reseal vent system.
11. The pressure relief valve should be inspected and tested every year.
12. Once a year, the items listed below should be inspected by a qualified service technician:

    a. The units controls
    b. Automatic gas valve
    c. Air filter
    d. Pressure switches
    e. Blower
    f. Pump
    g. Flow switch
    h. Low water cutoff
    i. Burner
    j. Heat exchanger
    k. Ignitor

Do the following once every six (6) months:

1. If a strainer is employed in a pressure reducing valve or the piping, clean it every six months.

11.B Maintenance Notes

Use only genuine manufacturers replacement parts.

⚠ CAUTION

When servicing the controls, label all wires before disconnecting them. Wiring errors can cause improper and dangerous operation. Verify proper operation after servicing.

⚠ WARNING

Disconnect all power to the unit before attempting any service procedures. Contact with electricity can result in severe injury or death.

The gas and electric controls are engineered for long life and dependable operation, but the safety of the equipment depends on their proper functioning.

11.B.1 Burner

Check the burner for debris. Remove the blower assembly to access the blower adapter plate. Remove the 4 bolts connecting the blower to the arm. Remove the blower adapter plate to access the burner. Pull the burner up and out. Clean the burner, if necessary, by blowing compressed air from the outside of the burner into the center of the burner, and wipe the inside of the burner clean with glass cleaner. A dirty burner may be an indication of improper combustion or dirty combustion air. Determine the cause of the problem and correct it. If the burner gaskets are damaged, replace them when replacing the burner.

11.B.2 Modulating Gas Valve / Venturi

The modulating gas valve consists of a valve body that incorporates the On/Off gas flow control and a negative pressure regulator. It provides the air/gas ratio control in combination with the fuel/air mixer to the unit. It is designed to operate with gas supply pressures between 4-13" W.C. (4-10.5" W.C. Natural Gas and 8-14" W.C. Propane).

To remove the gas valve or fuel/air mixer, shut off the power supply to the boiler. Turn off all manual gas valves connecting the boiler to the main gas supply line. Remove the front doors of the boiler and the top panels to gain access to the gas valve and fuel/air mixer. Disconnect the four (4) flange bolts connecting the gas manifold pipe to the gas valve. Remove the electrical connections to the gas valve. Remove the bolts connecting the fuel/air mixer flange to the blower. This allows the entire gas valve and fuel/air mixer assembly to be removed as an assembly to facilitate inspection and cleaning.

After the valve has been removed, reassemble in reverse order making sure to include all gaskets and O-rings. Turn on the manual gas valves and check for gas leaks. Turn on the main power. Place the unit in operation following the instructions in SECTION 10. Once the boiler is operating, check for leaks again and confirm all fasteners are tight.

11.B.3 Controller

Each unit has an integrated controller that incorporates manual reset high limit control, operating temperature control, modulating control, ignition control, outdoor reset control, pump control and many other features. If any of these features are thought to be defective, please consult the factory for proper troubleshooting practices before replacing a control.

If it is necessary to replace a controller, turn off all power to the unit and shut off all manual gas valves to the unit. Open the front doors to the unit. Remove all wire connections from the control board. The control board connections are keyed to only allow connection in the proper location, but proper handling techniques should be used to avoid damage to the wiring or connectors. To remove the control, undo the mounting screws. To replace the control repeat the steps listed above in the reverse order making sure to connect all wires in the proper locations. Place the unit in operation following the steps outlined in Section 10.

11.B.4 Spark Ignition Electrodes

The spark ignition electrode is a dual rod assembly. The ground rod is fastened to the mounting bracket of spark electrode assembly. The spark electrode passes through a ceramic insulator and then aligns with the ground rod. In order for a proper spark to form, the mounting bracket must be grounded to the boiler chassis. To remove the spark ignition electrodes shut off the power to the unit, turn off the main gas supply and open the front door of the boiler to gain access to the top portion of the unit. Remove the high tension ignition wire from the spark electrode. Remove the two nuts and spacer holding the spark electrode assembly in place. Pull the spark ignition electrodes out of the boiler slowly making sure to move the assembly as need, so the electrodes are not bent as they are being removed. If the old assembly is determined to be defective, install a new spark assembly in the reverse order, replacing the gasket if necessary.

11.B.5 Flame Sensor

The flame sensor is a single rod system. The minimum flame signal that will allow the unit to fire is 0.8 volts. To replace the flame sensor electrode, shut off the power supply to the boiler. Turn off all manual gas valves connecting the boiler to the main gas supply line. Open the front doors of the boiler to gain access to the flame sensor electrode. Remove the flame sensor wire from the electrode. Remove the two nuts fastening the electrode to the burner plate. Remove and replace the old flame sensor gasket. If the old electrode is determined to be defective, reinstall a new flame sensor electrode in the reverse order.

⚠ CAUTION

The igniters and sensors can become very hot. If you touch these parts accidentally, this can cause burns or injury.

11.B.6 Blower 1600

The combustion air blower is a high pressure centrifugal blower with a variable speed motor. The blower is driven by the control system using a PWM signal.

If it is necessary to service, remove or replace the blower, the Main Power MUST be disconnected and the main gas supply to the unit must be turned off. Open the doors and remove the doors from their hinges. Remove the top and top side jacket panels. Remove the fasteners holding the fuel/air mixer to the blower inlet. Remove the hardware that is connecting the blower outlet to the unit's adapter plate. If the blower is determined to be defective, replace the existing blower with a new one and assemble in the reverse order. Be sure to install all of the required gaskets and O-rings between the blower adapter plate and air/fuel mixer.

11.B.7 Blower 2000-4000

The combustion air blower is a high pressure centrifugal blower with a variable speed motor driven by a factory installed VFD located in the high voltage box. The speed of the motor is determined by the controls logic which is delivered to the VFD by a 0-10VDC signal.

If it is necessary to service, remove or replace the blower, the Main Power MUST be disconnected and the main gas supply to the unit must be turned off. To replace or remove the blower, turn off main power, remove hardware that connects the Fuel/Air mixer to the blower, then remove the hardware that connects the blower to the adapter plate. If the fan is determined to be defective, replace the existing fan with a new one by reversing the steps listed above. Be sure to install all the required gaskets and o-rings between blower, adapter plate, and Fuel/Air mixer.

11.B.8 Heat Exchanger Tubes

Black carbon soot build-up on the external surfaces of the heat exchanger is caused by one or more of the following: incomplete combustion, combustion air problems, venting problems or heater short-cycling. Soot buildup or other debris on the heat exchanger may restrict the flue passages.

If black carbon soot buildup on the heat exchanger is suspected, disconnect the electrical supply to the unit and turn off the gas supply by closing the manual gas valve on the unit. Access the heat exchanger through the heat exchanger shrouds. Removal of the outer baffles may be required for proper inspection. Use a flashlight. If there is a buildup of black carbon soot or other debris on the heat exchanger, clean per the following:

⚠ CAUTION

Black carbon soot buildup on a dirty heat exchanger can be ignited by a random spark or flame. To prevent this from happening, dampen the soot deposits with a wet brush or fine water spray before servicing the heat exchanger.

1. Shut off the main power supply to the boiler.
2. Turn off all manual gas valves connecting the boiler to the main gas supply line.
3. Remove the blower assembly and burner from the heat exchanger.
4. Disconnect the condensate drain line.
5. Attach a longer hose to the drain and run it to a bucket.
6. Clean the heat exchanger by brushing away any light accumulations of soot and debris. Use a non metallic brush with soft bristles to avoid damaging the surfaces of the heat exchanger tubes.
7. Once the tubes have been brushed clean, rinse the tubes and combustion chamber with a small amount of water to rinse all of the debris out of the bottom of the flue collector and into the longer condensate trap line which is being diverted into a separate container.

⚠ WARNING

Failure to rinse the debris from the heat exchanger and temporary drain line may Lead to clogged condensate lines, traps and neutralizers. Condensate pumps (if used) may also be damaged from the debris left behind, possibly causing property damage.

8. To place the unit back in operation, install all removed components in the reverse order. Be sure all gaskets are in place as the components are installed. Replace any damaged gaskets. Do ***not*** reuse damaged gaskets.
9. Place the unit into operation, checking all gas connections for leaks. Confirm all fasteners are tight.

11.B.9 Gas Pressure Switches

The high and low pressure gas switches are 120 volt manual reset switches that act to cut power to the interlock circuit if the gas pressure is too low or too high for proper operation. There is a manual reset on both.

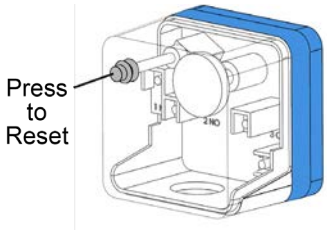

The gas pressure switches used are integrally vent limited and do not require venting to atmosphere. To remove a switch, remove the screw on the plastic housing and pull the clear cover off. Disconnect the three (3) wires from the screw terminals. Twist the switch off the pipe nipple. Reassemble in reverse order.
Set the low pressure gas switch to 3” w.c.
Set the high pressure gas switch to 15”w.c.”

NOTE - The Warranty does not cover damage caused by lack of required maintenance, lack of water flow, or improper operating practices.

SECTION 12 Troubleshooting

Condition	Information	Corrective Action
Flow Switch	• Insufficient flow at the outlet of the boiler/heater • Auto-reset Condition • Annunciation – "Warning Flow switch open" on Message Screen	• Faulty boiler/heater pump – replace pump. • Faulty pump contactor – replace contactor. • Blown boiler/heater pump fuse – replace fuse F14 on the control board.
Low Water Cut Off	• Insufficient water level in the boiler/heater heat exchanger. • Manual-reset Condition • Annunciation – on Navigation Bar Lockout: Low Water Cut Off	• Reset the LWCO from the reset button on the LWCO module. • Verify the system is full of water and all air has been purged from the system. • Check for loose jumpers if the LWCO is not installed.
Manual Reset High Limit	• Outlet water temperature has exceeded the manual reset high limit setting • Manual-reset Condition • Annunciation – on Navigation Bar Lockout: Man Reset High Limit	• Verify the system is full of water and all air has been purged from the system. • Verify the boiler/heater is piped properly into the heating system. • Check for proper pump operations. • Check the manual reset high limit set point.
Auto Reset High Limit	• Outlet water temperature has exceeded the auto reset high limit setting • Auto-reset Condition • Annunciation – "Warning High limit auto error" on Message Screen	• Verify the system is full of water and all air has been purged from the system. • Verify the boiler/heater is piped properly into the heating system. • Check for proper pump operations. • Check the manual reset high limit set point.
Pressure Switch	• Blocked flue switch contacts are open • Manual-reset Condition • Annunciation – on Navigation Bar Lockout: Burner APS Switch	• Check the wiring connections to the switch. The wires should be connected to the common and normally open terminals. • Check reference hose and tubing connected to the pressure switch for blockage/obstruction. • Faulty switch – replace switch. • Verify blower is operating – replace if necessary.
High Gas Pressure	• The high gas pressure switch has tripped • Manual-reset Condition • Annunciation – on Navigation Bar Lockout: High Gas Pressure	• Refer to Section 3 for Gas Supply and Piping information. • Verify supply and manifold gas pressures satisfy installation requirements.
Low Gas Pressure	• The low gas pressure switch has tripped • Manual-reset Condition • Annunciation – on Navigation Bar Lockout: Low Gas Pressure	• Refer to Section 3 for Gas Supply and Piping information. • Verify supply and manifold gas pressures satisfy installation requirements.
Condensate Level	• Condensate trap water level is high • Auto-reset Condition • Annunciation – "Warning Condensate level" on Message screen	• Check condensate trap for proper drainage • Check condensate trap for stuck level switch
Outlet Sensor	• Outlet probe is not connected • Manual-reset Condition • Annunciation – on Navigation Bar Lockout: Outlet Probe	• Check the sensor and wiring. Repair or replace as needed. • The outlet probe is a dual element probe with 10K and 20K thermistors. A quick test is to measure resistance and verify one resistance is double the other. Replace if necessary. • Measure the resistance of each element of the sensor and compare to the resistance table below. Replace if necessary.

	10K	20K
Temp (°F)	Resistance (Ω)	Resistance (Ω)
68	12555	25099
86	8025	16057
104	5279	10569
122	3563	7139
140	2463	4937
158	1739	3489
176	1253	2514
194	919	1845
212	685	1376

SECTION 12 Troubleshooting (continued)

<table>
<tr><th>Condition</th><th>Information</th><th>Corrective Action</th></tr>
<tr>
<td>Outlet Sensor Drift</td>
<td>• Dual element sensor readings do not agree.
• Manual-reset Condition
• Annunciation – on Navigation Bar
Lockout: Outlet Probe Drift</td>
<td>• Check the sensor and wiring. Repair or replace as needed.
• The outlet probe is a dual element probe with 10K and 20K thermistors. A quick test is to measure resistance and verify one resistance is double the other. Replace if necessary.
• Measure the resistance of each element of the sensor and compare to the resistance table below. Replace if necessary.
<table>
<tr><th rowspan="2">Temp (°F)</th><th>10K</th><th>20K</th></tr>
<tr><th>Resistance (Ω)</th><th>Resistance (Ω)</th></tr>
<tr><td>68</td><td>12555</td><td>25099</td></tr>
<tr><td>86</td><td>8025</td><td>16057</td></tr>
<tr><td>104</td><td>5279</td><td>10569</td></tr>
<tr><td>122</td><td>3563</td><td>7139</td></tr>
<tr><td>140</td><td>2463</td><td>4937</td></tr>
<tr><td>158</td><td>1739</td><td>3489</td></tr>
<tr><td>176</td><td>1253</td><td>2514</td></tr>
<tr><td>194</td><td>919</td><td>1845</td></tr>
<tr><td>212</td><td>685</td><td>1376</td></tr>
</table>
</td>
</tr>
<tr>
<td>Inlet Sensor</td>
<td>• Inlet sensor is damaged or not connected.
• Manual-reset condition
• Annunciation – on Navigation Bar
Lockout: Inlet Probe</td>
<td>• Check the sensor and wiring. Repair or replace as needed.
• Measure the resistance of the sensor and compare to the resistance table below. Replace if necessary.
<table>
<tr><th>Temp (°F)</th><th>Temp (°C)</th><th>Resistance (Ω)</th></tr>
<tr><td>68</td><td>20</td><td>12555</td></tr>
<tr><td>86</td><td>30</td><td>8025</td></tr>
<tr><td>104</td><td>40</td><td>5279</td></tr>
<tr><td>122</td><td>50</td><td>3563</td></tr>
<tr><td>140</td><td>60</td><td>2463</td></tr>
<tr><td>158</td><td>70</td><td>1739</td></tr>
<tr><td>176</td><td>80</td><td>1253</td></tr>
<tr><td>194</td><td>90</td><td>919</td></tr>
<tr><td>212</td><td>100</td><td>685</td></tr>
</table>
</td>
</tr>
<tr>
<td>Burner Parasitic Flame</td>
<td>• Sensing flame on burner prior to ignition.
• Manual-reset Condition
• Annunciation – on Navigation Bar
Lockout: Burner Parasitic Flame</td>
<td>• Inspect flame and wiring for damage and continuity. Replace if necessary.</td>
</tr>
<tr>
<td>Burner Max Trials</td>
<td>• The maximum attempts for ignition has occurred, without sensing flame.
• Manual-reset Condition
• Annunciation – on Navigation Bar
Lockout: Burner Max Trials</td>
<td>• Verify supply and manifold gas pressures satisfy installation requirements.
• Verify the proper intake and venting.
• Inspect the burner.
• Check pilot and main valve wiring and operation.
• Check ignition transformer electrode, flame detector wiring and position.</td>
</tr>
<tr>
<td>Additional High Limit</td>
<td>• Outlet water temperature has exceeded the additional high limit setting
• Auto-reset Condition
• Annunciation – “Warning Additional high limit” on Message Screen</td>
<td>• Verify the system is full of water and all air has been purged from the system.
• Verify the boiler/heater is piped properly into the heating system.
• Check for proper pump operations.
• Check the additional high limit set point.</td>
</tr>
</table>

SECTION 13 Replacement Parts

Use only genuine Manufacturer's replacement parts.

13.A General Information

To order or purchase parts, contact your nearest manufacturers dealer or distributor. (See the back cover of this manual for the manufacturers website).

13.B Component Illustrations, Parts Lists, and Part Numbers

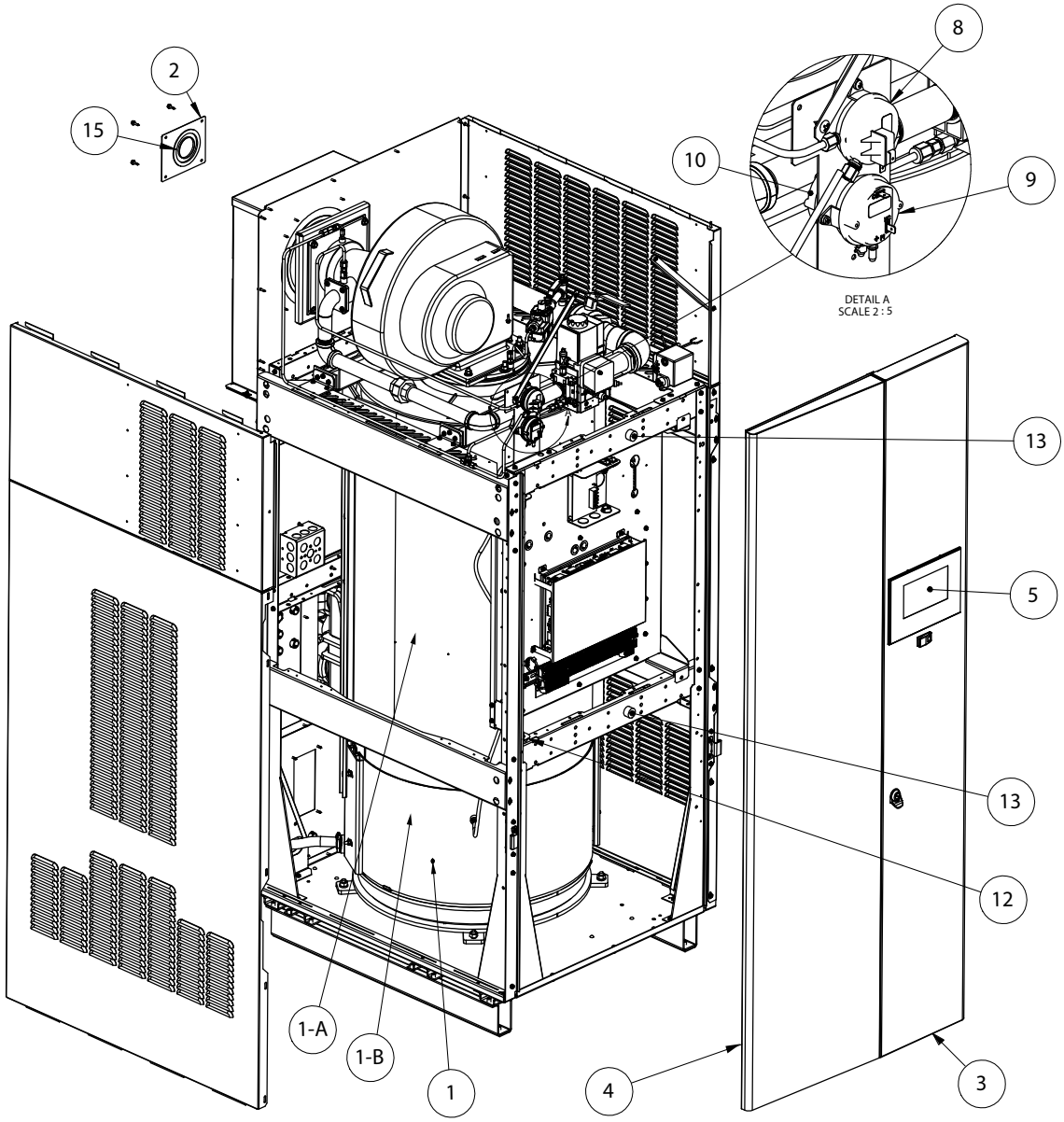

Final Assembly

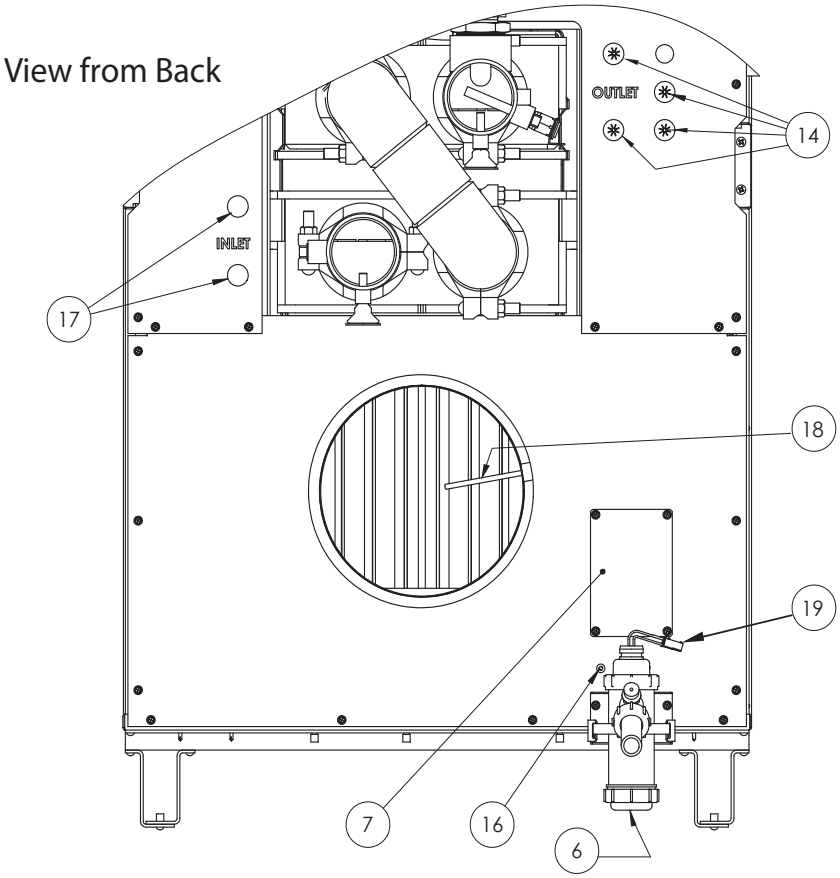

13.B.1 Final Assembly, Part Numbers

		1600	2000	2500	3000	3500	4000
Item #	Description	Part No.	Part No.	Part No.	Part No.	Part No.	Part No.
1	Heat exchanger assembly	R16N2070	R20N2070	R30N2070	R30N2070	R40N2070	R40N2070
1-A	Shroud Assembly, Upper	R2082200	R2082201	R2082202	R2082203	R2082204	R2082205
1-B	Shroud Assembly, Lower	R2082300	R2082301	R2082302	R2082303	R2082304	R2082305
2	Plate, rear panel, gas pipe	30N3034	30N3034	30N3034	30N3034	30N3034	30N3034
3	Door, right	20N3150	20N3150	30N3150	30N3150	40N3137	40N3137
4	Door, left, 208, 480, & 600 3 phase	R2076101	R2076101	N/A	N/A	N/A	N/A
4	Door, left, 120V	R2076102	R2076102	N/A	N/A	N/A	N/A
4	Door, left, 208 - 220 single phase	R2076103	R2076103	N/A	N/A	N/A	N/A
4	Door, left, All other models at sizes 2500 thru 4000			R2076104	R2076104	R2076105	R2076105
5	Touch screen w/ Nuts & Spacers	R20819	R20819	R20819	R20819	R20819	R20819
	Display holder	E2366001	E2366001	E2366001	E2366001	E2366001	E2366001
6	Condensate trap assembly	16N2010	20N2010	30N2010	30N2010	40N2010	40N2010
7	Panel, drain access	40N3048	40N3048	40N3048	40N3048	40N3048	40N3048
8	Pressure switch	E2363100	E2362200	E2362201	E2361900	E2361901	E2361900
9	Pressure switch	RE2344901	E2362001	E2363400	E2362301	E2362300	E2334701
10	Pressure switch	E2362200	N/A	N/A	N/A	E2362302	E2362302
11	Outlet box (not shown)	E2350900	E2350900	E2350900	E2350900	E2350900	E2350900
12	Spacer	F2035400	F2035400	F2035400	F2035400	F2035400	F2035400
13	Silicone rubber bumper	F2039700	F2039700	F2039700	F2039700	F2039700	F2039700
14	Bushing, nylon	S0064900	S0064900	S0064900	S0064900	S0064900	S0064900
15	Grommet, 2" pipe	S2116500	S2116500	S2116500	S2116500	S2116500	S2116500
16	Grommet, push-in	S2123600	S2123600	S2123600	S2123600	S2123600	S2123600
17	Plug, button, 7/8"	F0032300	F0032300	F0032300	F0032300	F0032300	F0032300
18	Flue gas sensor	E2386300	E2386300	E2386300	E2386300	E2386300	E2386300
19	Condensate Switch	40N2008	40N2008	40N2008	40N2008	40N2008	40N2008

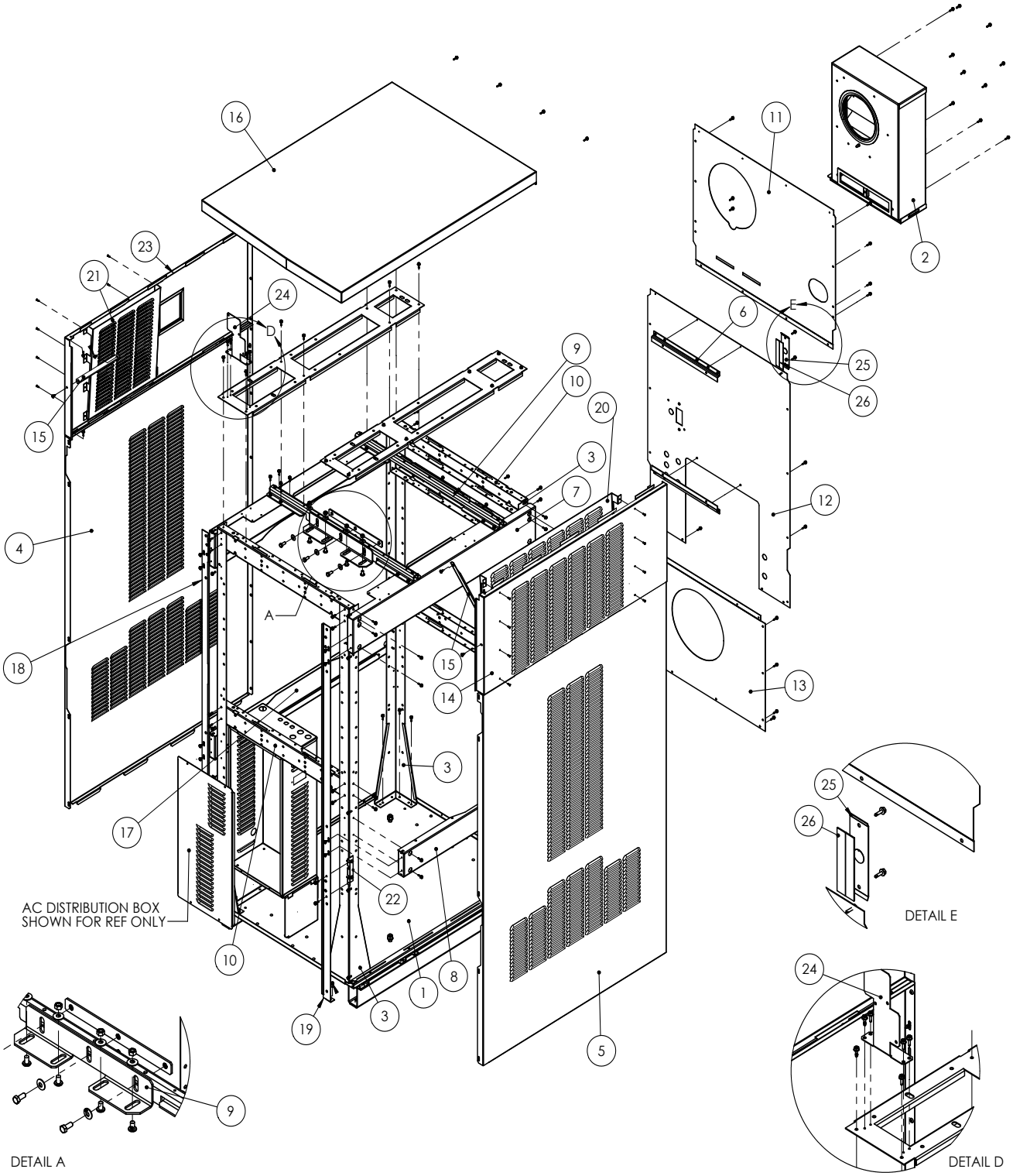

Frame and Jacket Assembly

		1600	2000	2500	3000	3500	4000
Item #	Description	Part No.	Part No.	Part No.	Part No.	Part No.	Part No.
1	Base assembly	16N1000	20N1000	30N1000	30N1000	40N1000	40N1000
2	Filter	A2121700	A2121700	A2121700	A2121700	A2121700	A2121700
	Filter assembly (incl. filter)	16N2600	20N2600	20N2600	30N2600	35N2600	40N2600
3	Stanchion	20N3010	20N3010	30N3001	30N3001	40N3001	40N3001
4	Panel, left bottom	20N3002	20N3002	30N3002	30N3002	40N3002	40N3002
5	Panel, right bottom	20N3004	20N3004	30N3004	30N3004	40N3004	40N3004
6	Extension brace, rear	30N3007	30N3007	30N3007	30N3007	30N3007	30N3007
7	Brace, upper side	20N3008	20N3008	30N3008	30N3008	40N3008	40N3008
8	Brace, lower right side	20N3047	20N3047	30N3011	30N3011	40N3047	40N3047
9	Frame mounting bracket	20N3005	20N3005	30N3012	30N3012	40N3005	40N3005
10	Brace	20N3013	20N3013	30N3013	30N3013	40N3013	40N3013
11	Panel, upper rear	20N3019	20N3019	30N3019	30N3019	40N3019	40N3019
12	Panel, center rear	20N3020	20N3020	30N3020	30N3020	40N3020	40N3020
13	Panel, lower rear	16N3021	20N3021	25N3021	30N23021	40N3021	40N3021
14	Panel, right	20N3036	20N3036	30N3036	30N3036	40N3036	40N3036
15	Strut, upper panel support	30N3043	30N3043	30N3043	30N3043	30N3043	30N3043
16	Panel, top	16N3045	16N3045	30N3045	30N3045	40N3045	40N3045
17	Bracket, lower left side	20N3047	20N3047	30N3049	30N3049	40N3047	40N3047
18	Hinge mounting bracket, left	20N3163	20N3163	30N3050	30N3050	40N3163	40N3163
19	Hinge mounting bracket, right	20N3164	20N3164	30N3051	30N3051	40N3164	40N3164
20	Panel, right, rain splatter	30N3053	30N3053	30N3053	30N3053	40N3050	40N3050
21	Panel, left, rain splatter	30N3054	30N3054	30N3054	30N3054	40N3050	40N3050
22	Bracket, hinge brace	30N3055	30N3055	30N3055	30N3055	30N3055	30N3055
23	Panel, top left	20N3035	20N3035	30N3057	30N3057	40N3035	40N3035
24	Bracket, pressure switch	20N3054	20N3054	20N3054	20N3054	20N3054	20N3054
25	Cover, field connections	17J3025	17J3025	17J3025	17J3025	17J3025	17J3025
26	Gasket, .75" x .06" x 2 feet	R2077402	R2077402	R2077402	R2077402	R2077402	R2077402

13.B.2 Frame and Jacket Assembly, Part Numbers

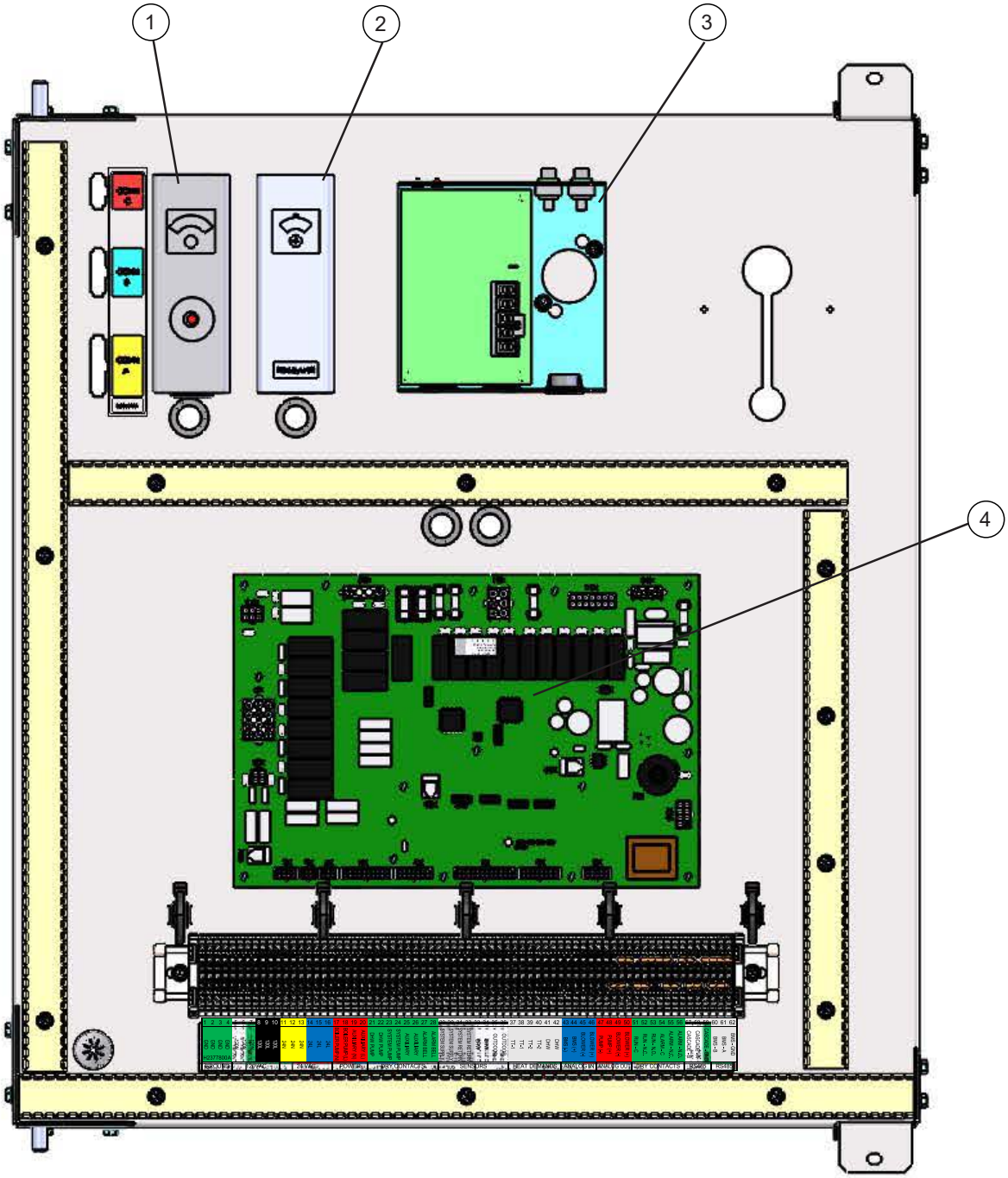

		1600	2000	2500	3000	3500	4000
Item #	Description	Part No.	Part No.	Part No.	Part No.	Part No.	Part No.
1	Manual reset high limit (opt.)	E2217800	E2217800	E2217800	E2217800	E2217800	E2217800
2	Auto reset high limit (opt.)	RE2217700	RE2217700	RE2217700	RE2217700	RE2217700	RE2217700
3	Low water cutoff	RE2075100	RE2075100	RE2075100	RE2075100	RE2075100	RE2075100
4	Control board & Standoffs	30N7101	30N7101	30N7101	30N7101	30N7101	30N7101

13.B.3 Control Panel, Part Numbers

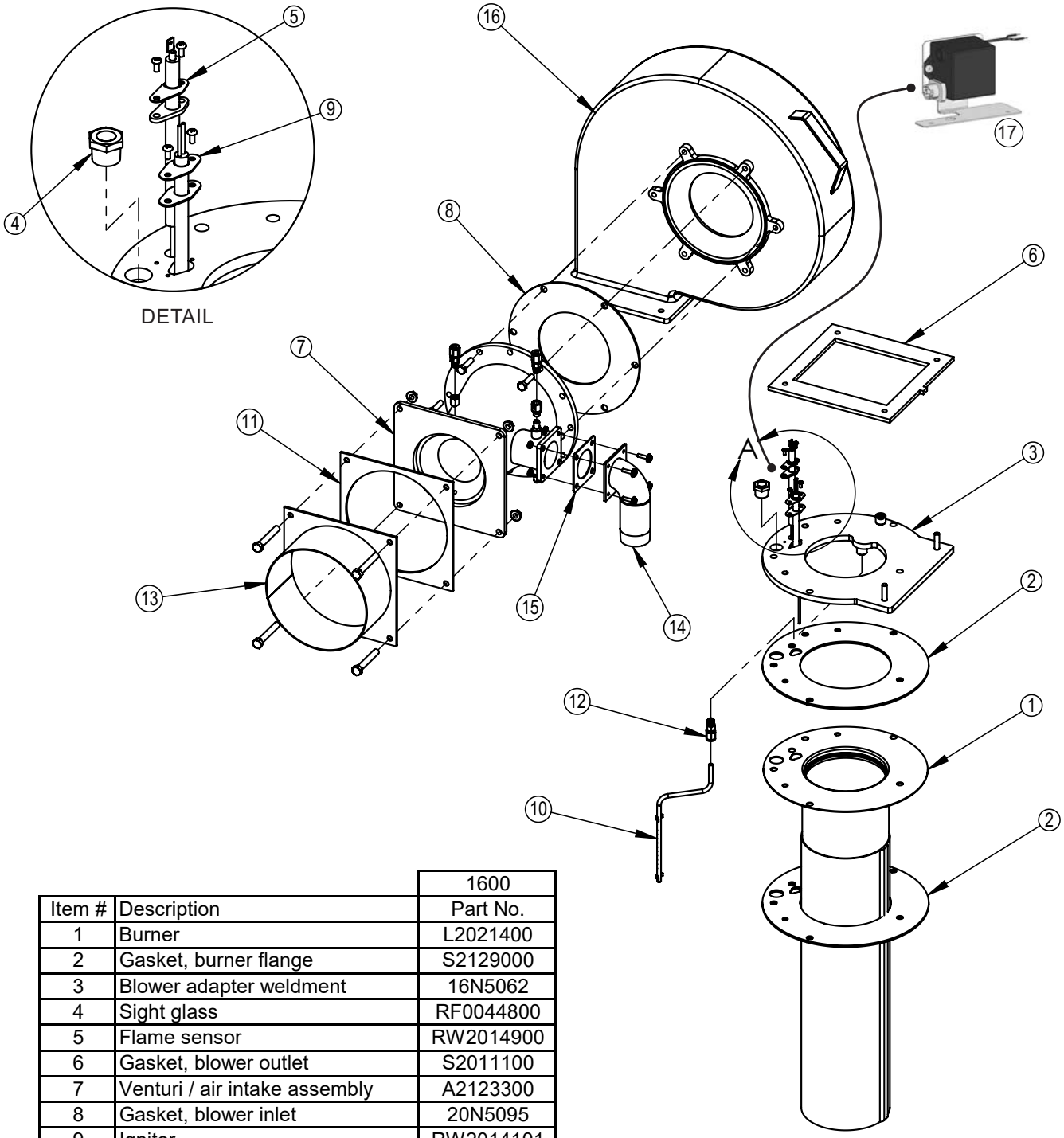

Item #	Description	1600 Part No.
1	Burner	L2021400
2	Gasket, burner flange	S2129000
3	Blower adapter weldment	16N5062
4	Sight glass	RF0044800
5	Flame sensor	RW2014900
6	Gasket, blower outlet	S2011100
7	Venturi / air intake assembly	A2123300
8	Gasket, blower inlet	20N5095
9	Ignitor	RW2014101
10	Pilot tube weldment	R2076304
11	Gasket, filter box flange	20N5094
12	Adapter, 1/8"NPT x 1/4" tube	P2097800
13	Pipe & flange, blower	16N5092
14	Pipe & flange, gas intake	16N5074
15	Gasket, venturi / valve, cork	RS2104900
16	Blower	A2132700
17	Spark generator	20N3060

13.B.4 Air / Gas System, Part Numbers (Model 1600)

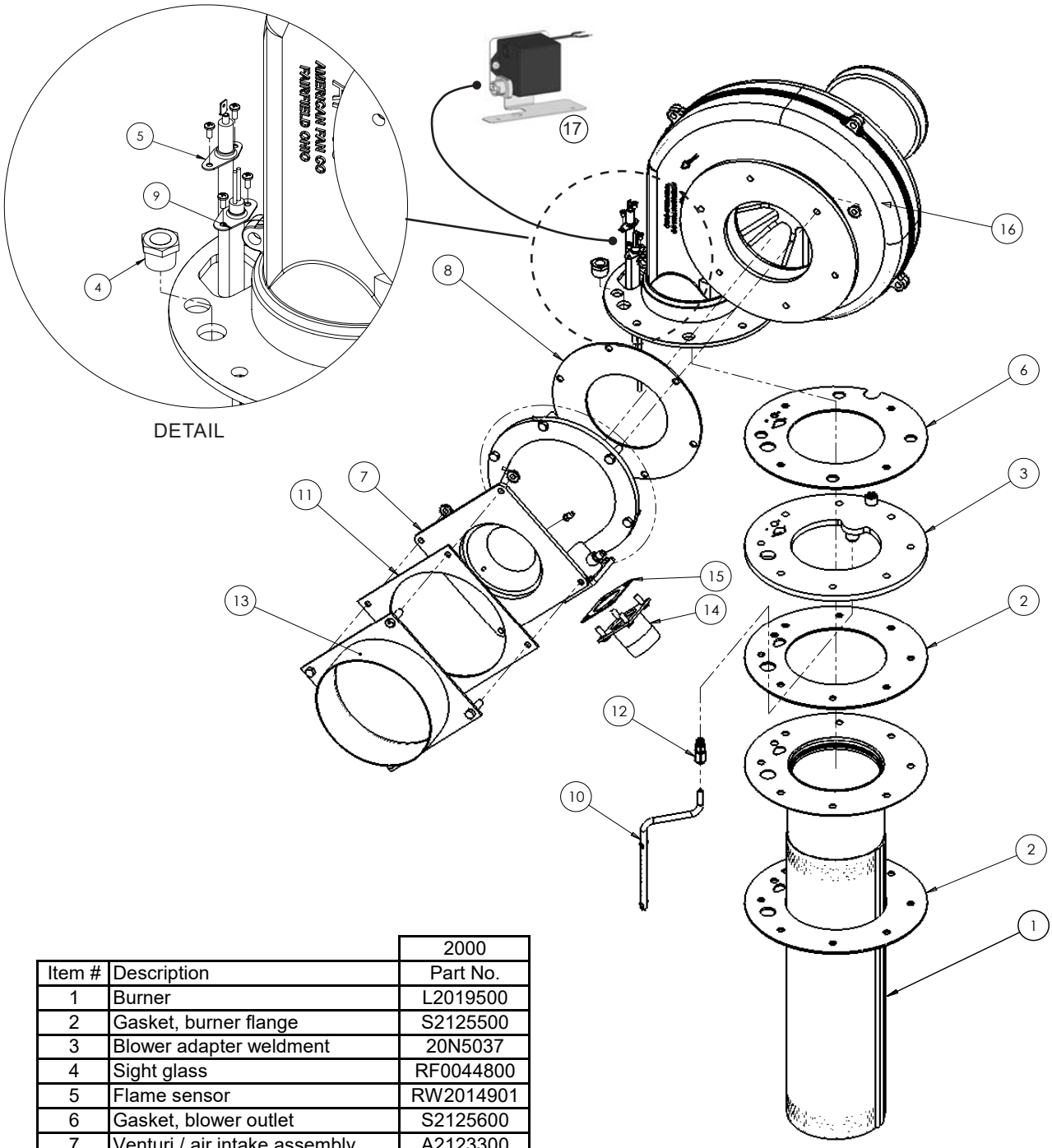

Item #	Description	2000 Part No.
1	Burner	L2019500
2	Gasket, burner flange	S2125500
3	Blower adapter weldment	20N5037
4	Sight glass	RF0044800
5	Flame sensor	RW2014901
6	Gasket, blower outlet	S2125600
7	Venturi / air intake assembly	A2123300
8	Gasket, blower inlet	20N5059
9	Ignitor	RW2014101
10	Pilot tube weldment	R2076303
11	Gasket, filter box flange	20N5094
12	Adapter, 1/8"NPT x 1/4" tube	P2097800
13	Pipe & flange, blower	20N5092
14	Pipe & flange, gas intake	20N5090
15	Gasket, venturi / valve, cork	RS2104900
16	Blower, 110-240V 1ph	A2135100
16	Blower, 208-480V 3ph	A2135100
16	Blower, 600V 3ph	A2135200
17	Spark generator	20N3060

13.B.5 Air / Gas System, Part Numbers (Model 2000)

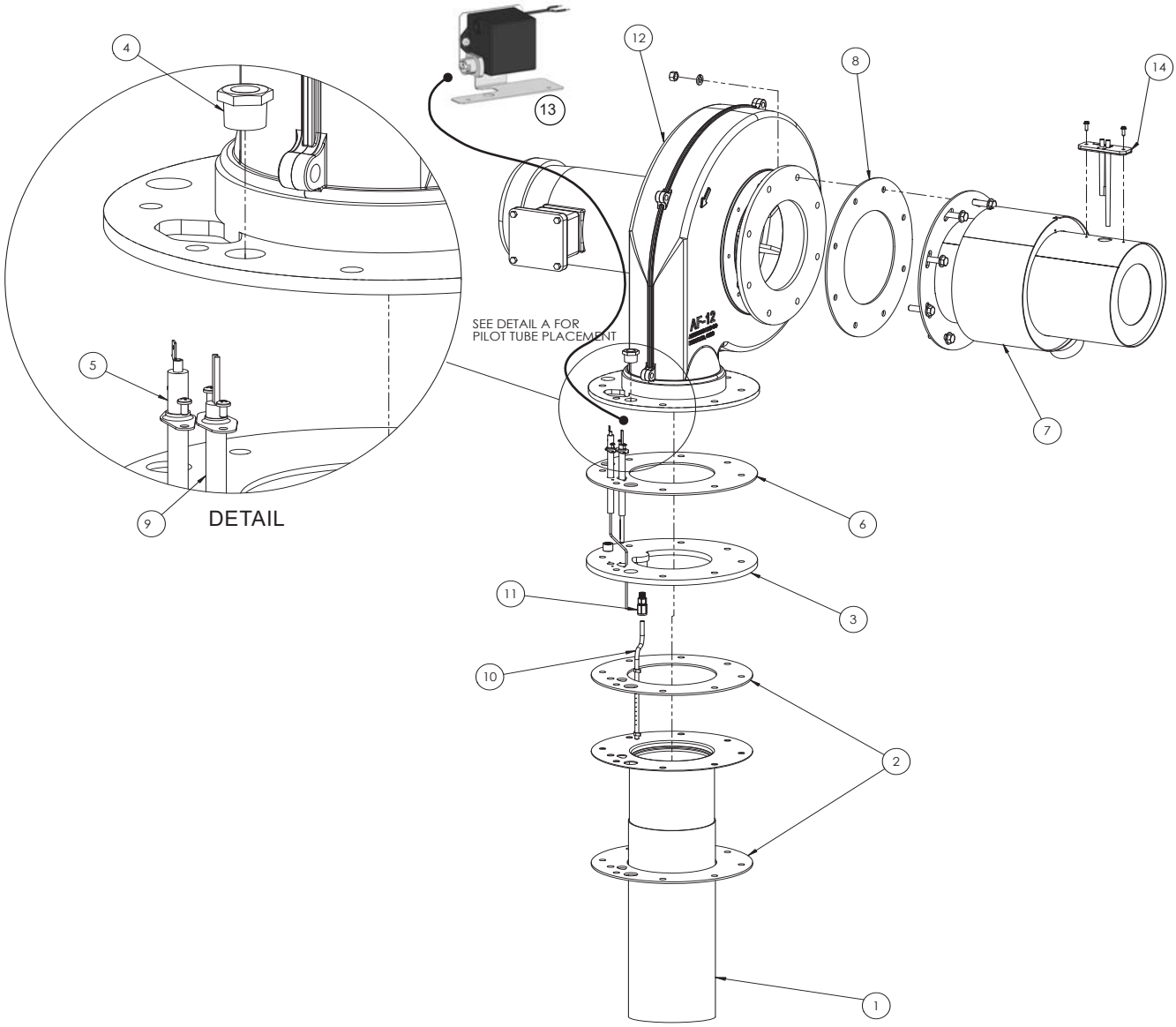

		2500	3000
Item #	Description	Part No.	Part No.
1	Burner	L2020600	L2020600
2	Gasket, burner flange	S2125100	S2125100
3	Blower adapter weldment	30N5037	30N5037
4	Sight glass	RF0044800	RF0044800
5	Flame sensor	RW2014901	RW2014901
6	Gasket, blower outlet	S2125200	S2125200
7	Venturi / air intake assembly	30N5092	30N5092
8	Gasket, blower inlet	S2125300	S2125300
9	Ignitor	RW2014101	RW2014101
10	Pilot tube weldment	R2076301	R2076301
11	Adapter, 1/8"NPT x 1/4" tube	P2097800	P2097800
12	Blower, 208-480V 3ph	A2123700	A2123700
12	Blower, 600V 3ph	A2124100	A2124100
13	Spark generator	20N3060	30N3060
14	Flow sensor, diff pressure	A2121601	A2121601

13.B.6 Air / Gas System, Part Numbers (Models 2500 & 3000)

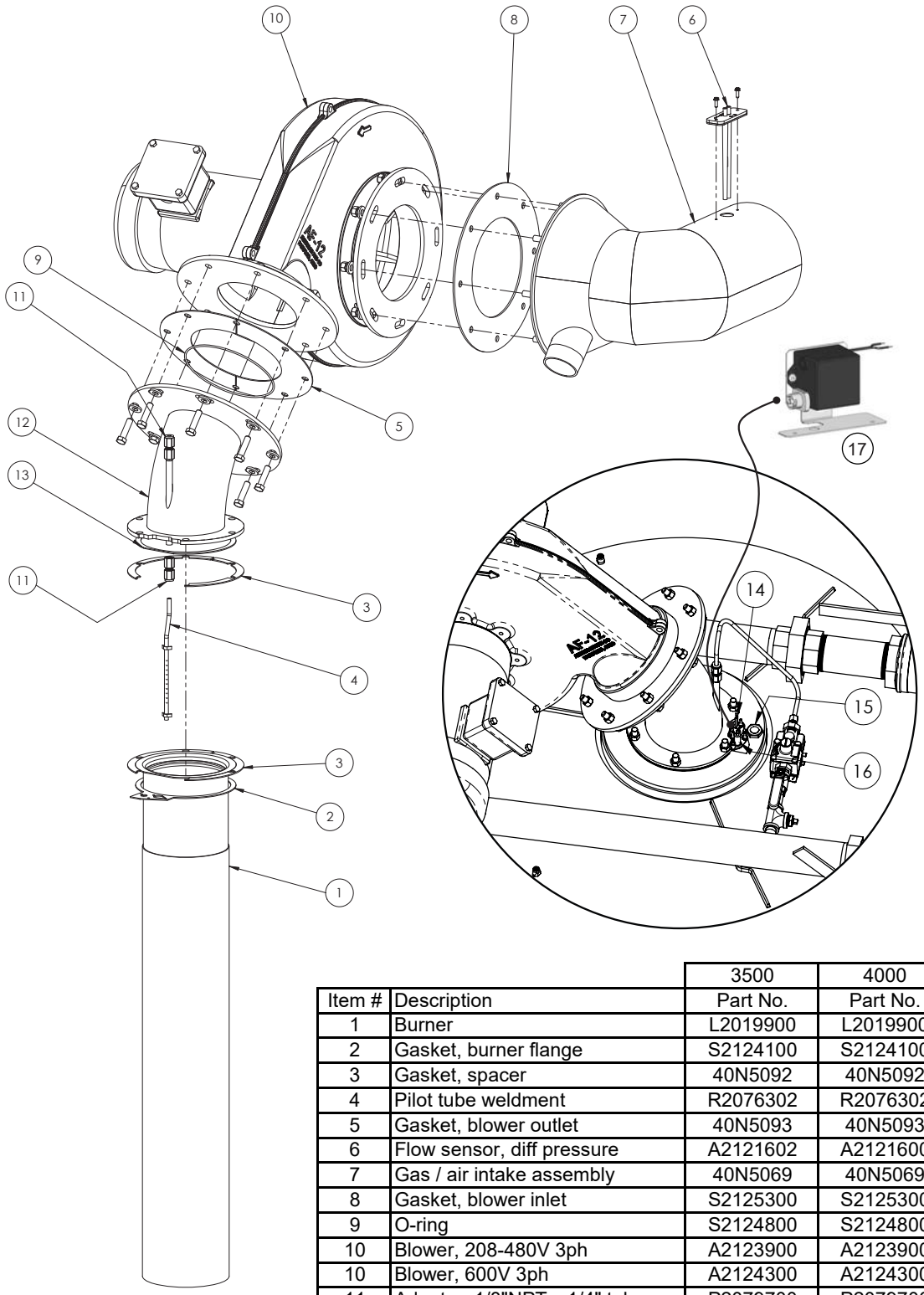

		3500	4000
Item #	Description	Part No.	Part No.
1	Burner	L2019900	L2019900
2	Gasket, burner flange	S2124100	S2124100
3	Gasket, spacer	40N5092	40N5092
4	Pilot tube weldment	R2076302	R2076302
5	Gasket, blower outlet	40N5093	40N5093
6	Flow sensor, diff pressure	A2121602	A2121600
7	Gas / air intake assembly	40N5069	40N5069
8	Gasket, blower inlet	S2125300	S2125300
9	O-ring	S2124800	S2124800
10	Blower, 208-480V 3ph	A2123900	A2123900
10	Blower, 600V 3ph	A2124300	A2124300
11	Adapter, 1/8"NPT x 1/4" tube	P2079700	P2079700
12	Blower tube	40N5077	40N5077
13	Gasket, burner	S2124600	S2124600
14	Ignitor	RW2014101	RW2014101
15	Sight glass	RF0044800	RF0044800
16	Flame sensor	RW2014901	RW2014901
17	Spark generator	40N3060	40N3060

13.B.7 Air / Gas System, Part Numbers (Models 3500 and 4000)

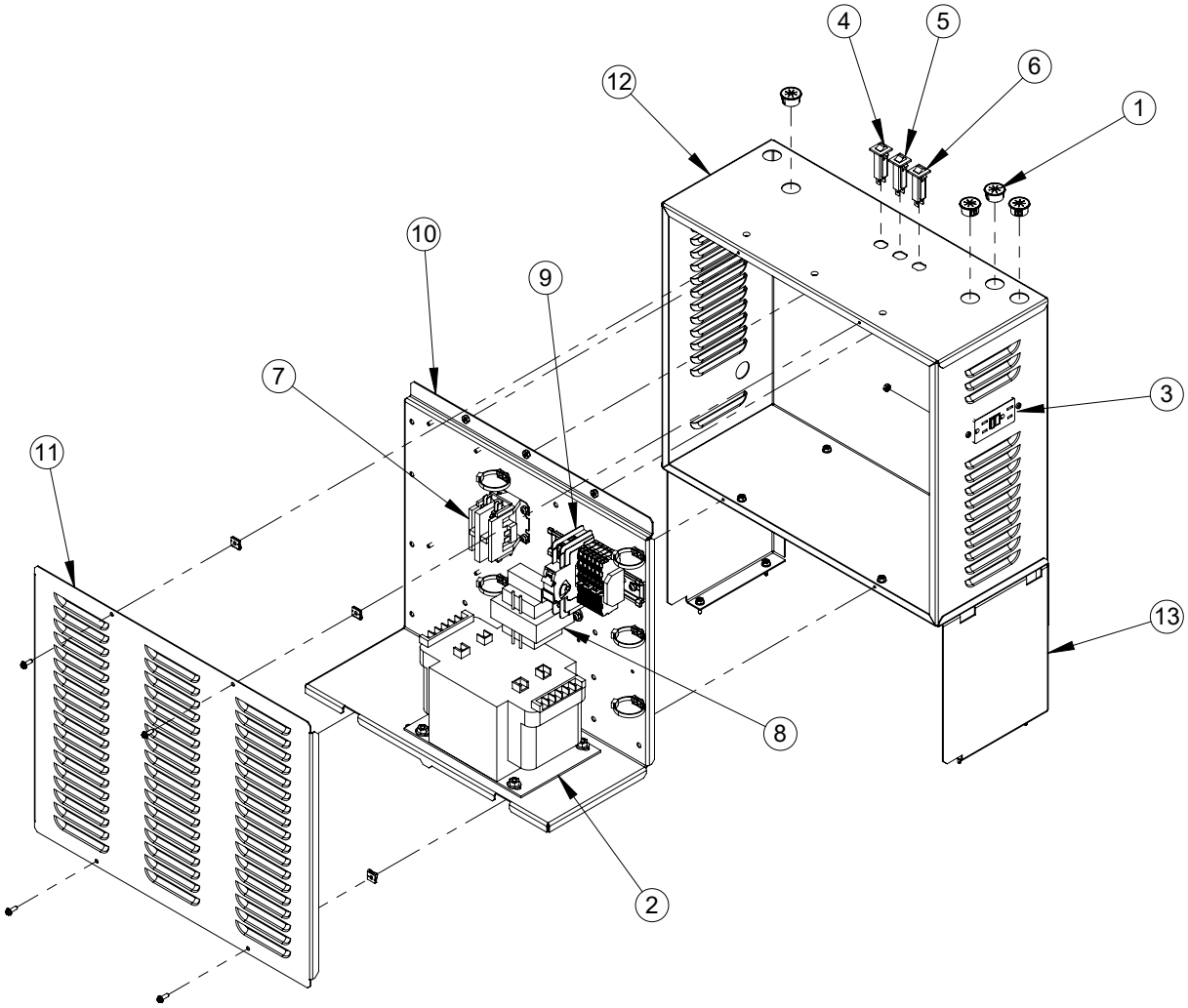

		1600		
		120V 1PH	208V 1PH	220/240V 1PH
Item #	Description	Part No.	Part No.	Part No.
1	Bushing, nylon	S0064900	S0064900	S0064900
2	Transformer	E2359300	E2355500	E2355900
3	GFCI receptacle	E2355400	E2355400	E2355400
4	Circuit breaker, 2A	E2335100	E2335100	E2335100
5	Circuit breaker, 10A	E2372700	E2372700	E2372700
6	Circuit breaker, 3A	E2311800	E2311800	E2311800
7	Relay, 115V, DPST	E2311100	E2311100	E2311100
8	Transformer 120/24V	R2082500	R2082500	R2082500
9	Circuit Breaker	E2368300	E2359700	E2359700
10	Panel, AC distribution box	20N7319	20N7317	20N7317
11	Cover, box, power input	20N7313	20N7313	20N7313
12	Box, power input	20N7312	20N7312	20N7312
13	Support, power input box	20N7311	20N7311	20N7311
-	Wire harness assembly, circuit breakers to transformer (not shown)	16N7401	16N7403	16N7402

13.B.8 AC Distribution Box, Part Numbers (Model 1600)

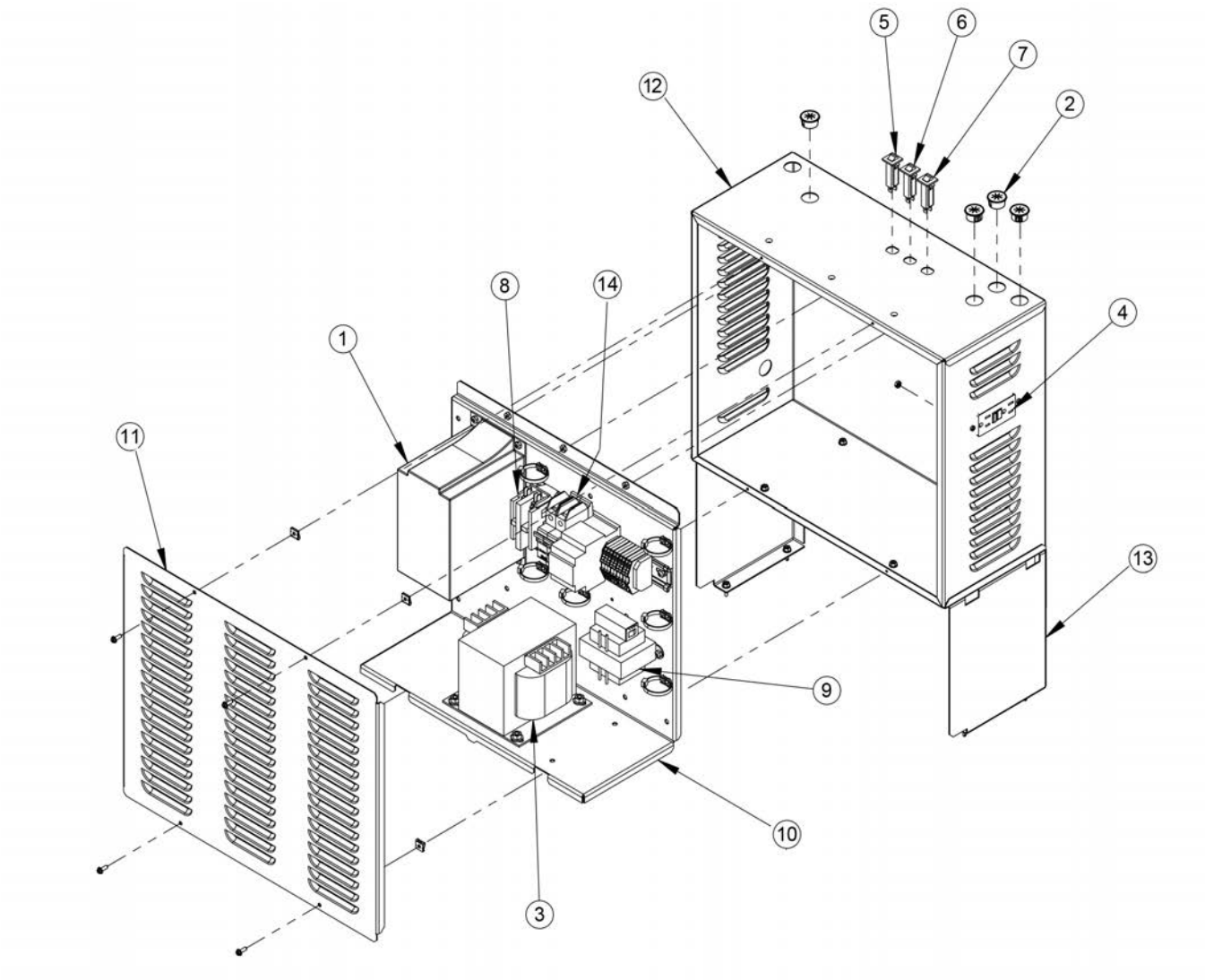

		2000					
		120V 1PH	208 1PH	220/240V 1PH	208V 3PH	480V 3PH	600V 3PH
Item #	Description	Part No.	Part No.	Part No.	Part No.	Part No.	Part No.
1	VFD with program	XN716001	XN716001	XN716001	XN716002	XN716003	XN716004
2	Bushing, nylon	S0064900	S0064900	S0064900	S0064900	S0064900	S0064900
3	Transformer	E2359300	E2359300	E2355900	E2355500	E2352600	E2352600
4	GFCI receptacle	E2355400	E2355400	E2355400	E2355400	E2355400	E2355400
5	Circuit breaker, 2A	E2335100	E2335100	E2335100	E2335100	E2335100	E2335100
6	Circuit breaker, 10A	E2372700	E2372700	E2372700	E2372700	E2372700	E2372700
7	Circuit breaker, 3A	E2311800	E2311800	E2311800	E2311800	E2311800	E2311800
8	Relay, 115V, DPST	E2311100	E2311100	E2311100	N/A	N/A	N/A
9	Transformer 120/24V	RE2370700	RE2370700	RE2370700	RE2370700	RE2370700	RE2370700
10	Panel, AC distribution box	20N7316	20N7317	20N7317	20N7318	20N7318	20N7318
11	Cover, box, power input	20N7313	20N7313	20N7313	20N7313	20N7313	20N7313
12	Box, power input	20N7312	20N7312	20N7312	20N7312	20N7312	20N7312
13	Support, power input box	20N7311	20N7311	20N7311	20N7311	20N7311	20N7311
14	Circuit Breaker	E2368300	E2359700	E2359700	E2355600	E2355100	E2360100
-	Wire harness assembly, circuit breakers to transformer (not shown)	20N740001	20N74006	20N740002	20N740003	20N740004	20N740005

13.B.9 AC Distribution Box, Part Numbers (Model 2000)

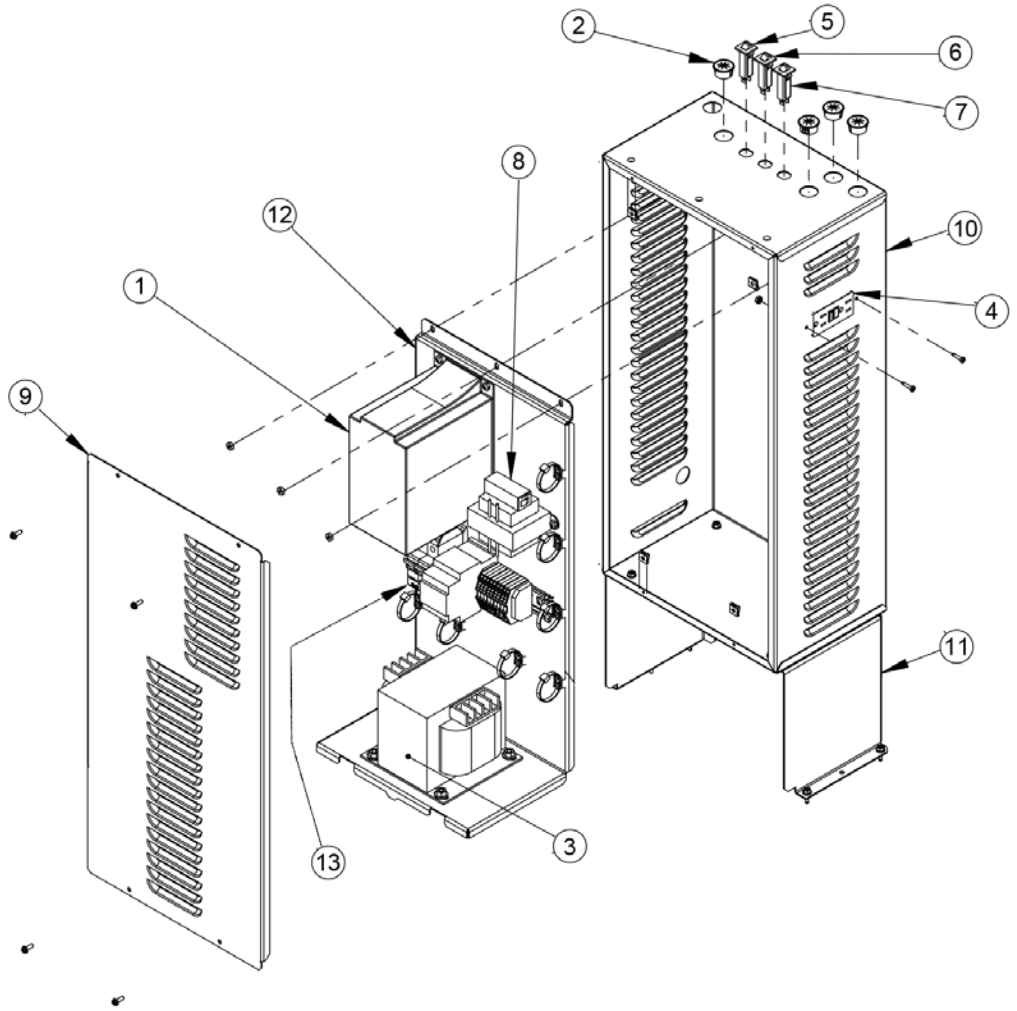

		2500	3000	3500	4000
Item #	Description	Part No.	Part No.	Part No.	Part No.
1	VFD with program, 208V 3PH	XN715008	XN715005	XN715011	XN715005
	VFD with program, 480V 3PH	XN715009	XN715006	XN715012	XN715006
	VFD with program, 600V 3PH	XN715010	XN715007	XN715013	XN715007

		2500 & 3000			3500 & 4000		
		208V 3PH	480V 3PH	600V 3PH	208V 3PH	480V 3PH	600V 3PH
		Part No.	Part No.	Part No.	Part No.	Part No.	Part No.
2	Bushing, nylon	S0064900	S0064900	S0064900	S0064900	S0064900	S0064900
3	Transformer	E2355500	E2352600	E2352600	E2355500	E2352600	E2352600
4	GFCI receptacle	E2355400	E2355400	E2355400	E2355400	E2355400	E2355400
5	Circuit breaker, 2A	E2335100	E2335100	E2335100	E2335100	E2335100	E2335100
6	Circuit breaker, 10A	E2372700	E2372700	E2372700	E2372700	E2372700	E2372700
7	Circuit breaker, 3A	E2311800	E2311800	E2311800	E2311800	E2311800	E2311800
8	Transformer 120/24V	RE2370700	RE2370700	RE2370700	RE2370700	RE2370700	RE2370700
9	Cover, box, power input	30N3028	30N3028	30N3028	30N3028	30N3028	30N3028
10	Box, power input	30N3024	30N3024	30N3024	30N3024	30N3024	30N3024
11	Support, power input box	30N3023	30N3023	30N3023	30N3023	30N3023	30N3023
12	Panel, AC distribution box	40N7061	40N7061	40N7061	40N7061	40N7061	40N7061
13	Circuit Breaker	E2355600	E2355100	E2360100	E2355600	E2355100	E2360100
-	Wire harness assembly, circuit breakers to transformer (not shown)	30N745001	30N745002	30N745003	40N745001	40N745002	40N745003

13.B.10 AC Distribution Box, Part Numbers (Models 2500 to 4000)

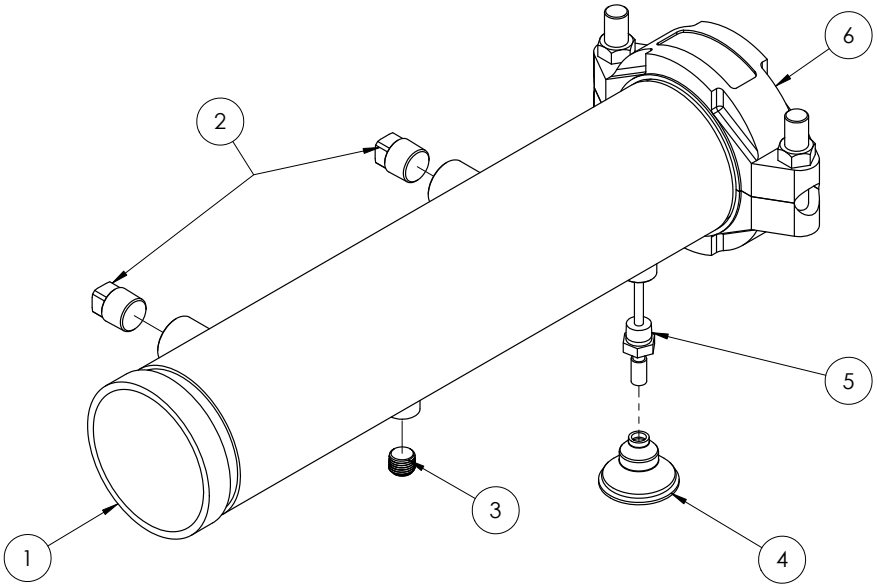

		1600	2000	2500	3000	3500	4000
ITEM NO.	DESCRIPTION	PART NO	PART NO	PART NO	PART NO	PART NO	PART NO
1	WELDMENT WATERWAY INLET	20N4026	20N4026	20N4026	20N4026	40N4026	40N4026
2	PLUG, SQUARE OR HEX, 1/2" NPT, SS	P2088300	P2088300	P2088300	P2088300	P2088300	P2088300
3	PLUG, PIPE, SS, 1/4" NPT	P2080300	P2080300	P2080300	P2080300	P2080300	P2080300
4	GROMMET, PIPE, MULTI SIZE	S2114000	S2114000	S2114000	S2114000	S2114000	S2114000
5	SENSOR, TEMPERATURE, WATER, 10K	E2392200	E2392200	E2392200	E2392200	E2392200	E2392200
6	COUPLING, VICTAULIC	P2086500	P2086500	P2086500	P2086500	P2086600	P2086600

13.B.11 Inlet Waterway Assemblies, Part Numbers

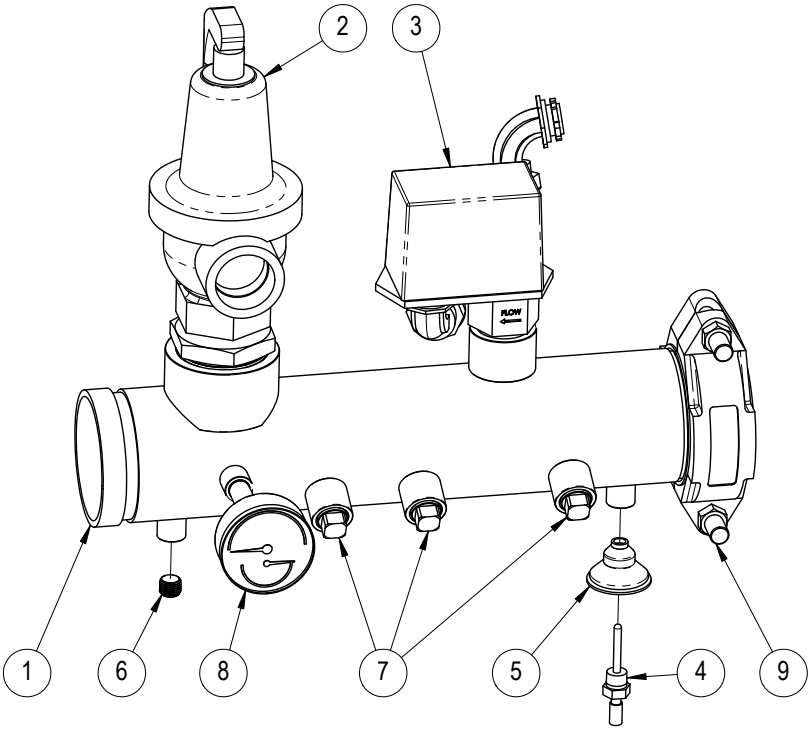

		1600	2000	2500	3000	3500	4000
Item #	Description	Part No.	Part No.	Part No.	Part No.	Part No.	Part No.
1	Pipe, outlet manifold	20N4023	20N4023	20N4023	20N4023	40N4020	40N4020
2	PRV 75# (MGH)	A0002700	A0002700	A0000300	A0000300	A0000703	A0000703
	PRV 125# (MGV)	A0000400	A0000400	A0000200	A0000200	A2124006	A2124006
3	Flow switch	RE0013000	RE0013000	RE0013000	RE0013000	RE0013000	RE0013000
	Flow switch paddle	E2255800	E2255800	E2255800	E2255800	E2255900	E2255900
4	Sensor, water temp	RE2319900	RE2319900	RE2319900	RE2319900	RE2319900	RE2319900
5	Grommet, rubber	S2114000	S2114000	S2114000	S2114000	S2114000	S2114000
6	Plug, 1/4" NPT	P2080300	P2080300	P2080300	P2080300	P2080300	P2080300
7	Plug, 1/2" NPT	P2088300	P2088300	P2088300	P2088300	P2088300	P2088300
8	Gauge, temp & pressure	RA0079000	RA0079000	RA0079000	RA0079000	RA0079000	RA0079000
9	Coupling, rigid, victaulic	P2086500	P2086500	P2086500	P2086500	P2086600	P2086600

13.B.12 Outlet Waterway Assemblies, Part Numbers

Gas Train Assembly (Models 1600, 2000, 2500 and 3000)

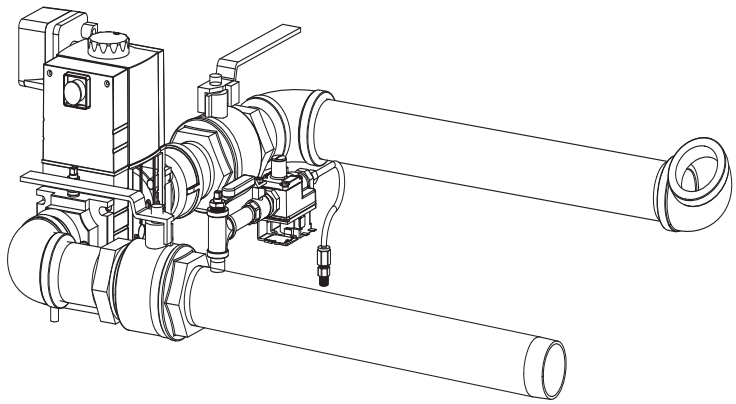

		1600	2000	2500	3000
Item #	Description	Part No.	Part No.	Part No.	Part No.
1	Pressure switch, low gas	R2004100	R2004100	R2004100	R2004100
2	Pressure switch, high gas	R2004000	R2004000	R2004000	R2004000
3	elbow	P0008400	P0008400	P0086000	P0008400
4	Nipple	P0015700	P0019800	P0020300	P0021100
5	Nipple, 2"NPTx4"	P2095800	P2095800	P0022600	P0022600
6	Bushing, reducing, 1/4x1/8	P2032400	P2032400	P2032400	P2032400
7	Adapter, 2"nptx1-1/2"npt	N/A	P0003900	P0003900	P2085700
8	Nipple	P0015700	P2092800	P2096500	P2091600
9	Bushing, nylon	S0064900	S0064900	S0064900	S0064900
10	Gas valve, main	V2023000	V2021200	V2021200	V2021200
11	Flange, gas valve	V2024400	V2021900	V2021900	V2021900
12	Pilot regulator	V2022100	V2022100	V2022100	V2022100
13	Ball valve, 3/8"	V2022200	V2022200	V2022200	V2022200
14	Compression fitting, 1/4" tube	N/A	P2097800	P2097800	P2097800
15	Compression fitting, 1/4" tube	P0004100	P0004100	P0004100	P0004100
16	Pilot tube with fittings	R2082002	R30N6027	R30N6027	R30N6027
17	Nipple, 1/8"x2"	P0011300	P0011300	P0011300	P0011300
18	Elbow, 1/8"	P2008900	P2008900	P2008900	P2008900
19	Nipple, 1/8"x2"	P0011100	P0011100	P0011100	P0011100
20	Nipple/tee weldment	30N6031	30N6031	30N6031	30N6031
21	Tee, 1/8"	P0027100	P0027100	P0027100	P0027100
22	Nipple, 1/8"x close	P0011100	P0011100	P0011100	P0011100
23	Plug	70-236	70-236	70-236	70-236
24	Ball valve	R2011600	R2011600	R2003700	R2011600
25	Ball valve	RV2003000	R2003700	R2003700	R2011600
26	Adapter, 1/8FNPTx1/8M	P2089600	P2089600	P2089600	P2089600
27	Adapter, 1/8NPTMx1/4 tube	P2097800	P2097800	P2097800	P2097800
28	Flange, adjustable shutter	V2023200	V2022400	V2022400	V2022000
29	Nipple	P0015700	P0015500	P0015400	P0019100
30	Nipple, 3/8"x3"	P2090500	P2090500	P2090500	P2090500
31	Tee, 3/8x3/8x3/8	P2090600	P2090600	P2090600	P2090600
32	Bushing, reducing, 3/8x1/8	P2090700	P2090700	P2090700	P2090700
33	Union	P0030500	P0030700	N/A	N/A
34	Nipple	P0053400	P2077800	N/A	N/A
35	Elbow	P0008700	P0008700	P0008700	P0008700
36	Nipple	N/A	N/A	N/A	P0021200
37	Nipple	P2095900	P0021200	P0021200	P0021200
38	Nozzle orifice, 0.2mm	P2105100	N/A	N/A	N/A
39	Washer, sealing	S2123500	S2123500	S2123500	S2123500
40	Bushing, hex	P0001400	N/A	N/A	N/A

13.B.13 Gas Train Assembly, Part Numbers (Models 1600, 2000, 2500 and 3000)

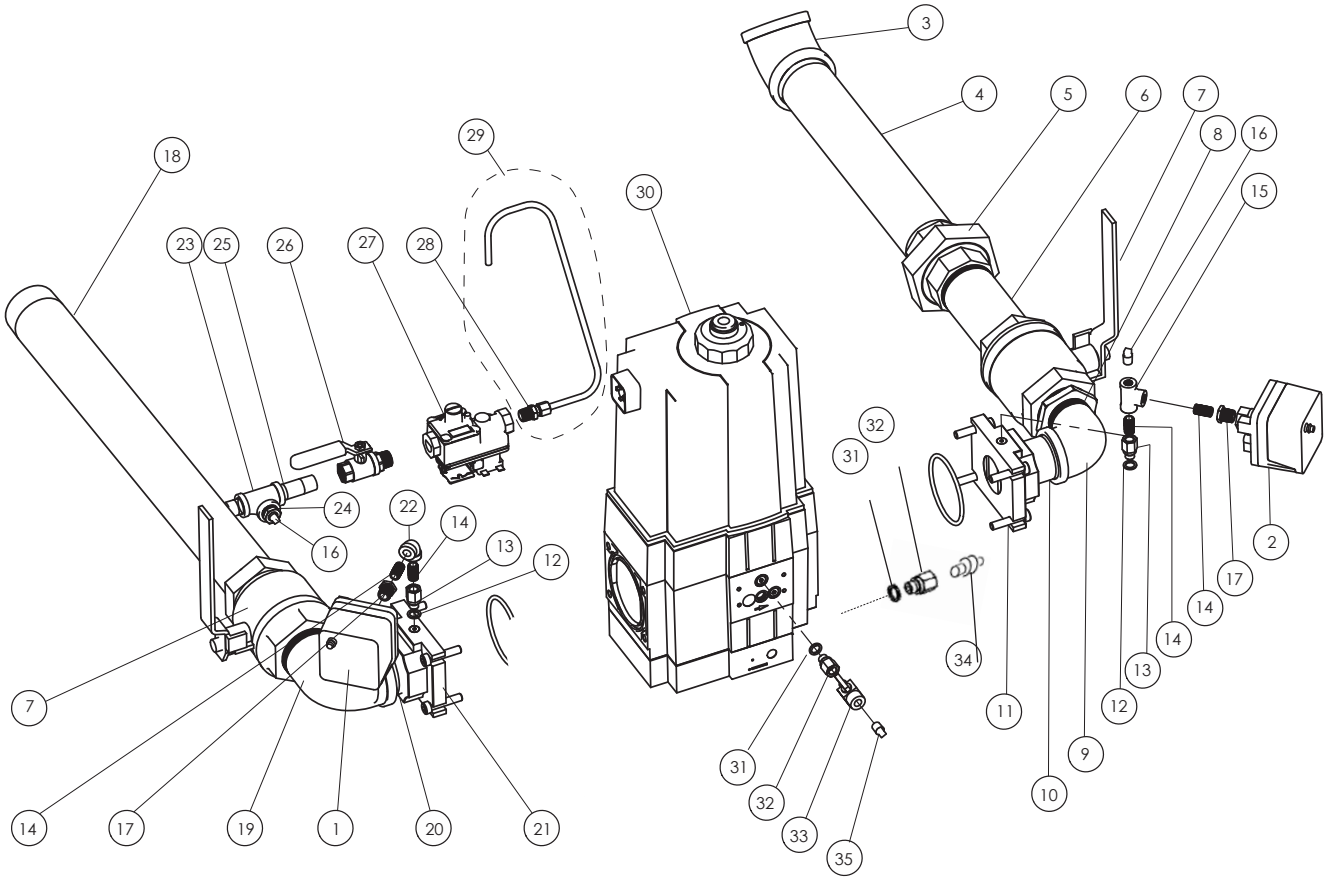

Gas Train Assembly (Models 3500 and 4000)

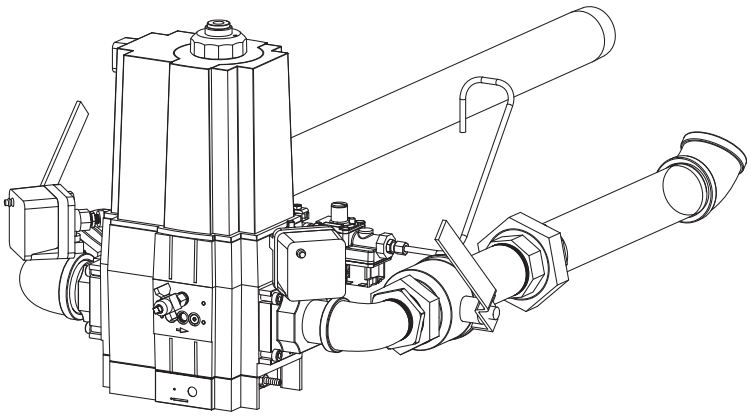

		3500	4000
Item #	Description	Part No.	Part No.
1	Pressure switch, low gas	R2004100	R2004100
2	Pressure switch, high gas	R2004000	R2004000
3	Elbow, 45°x2"	P2090900	P2090900
4	Nipple, 2"x14"	P2091000	P2091000
5	Union, 2"	P0030800	P0030800
6	Nipple, 2"x6"	P0021700	P0021700
7	Ball valve	R2011600	R2011600
8	Bushing, 2"x1-1/2"	P0001400	P0001400
9	Elbow, 90°x1-1/2"	P0009600	P0009600
10	Nipple, 1-1/2"x2-1/2"	P2096600	P2045300
11	Flange, adjustable shutter	V2022000	V2022000
12	Washer, sealing	S2123500	S2123500
13	Adapter, 1/8FNPTx1/8M	P2089600	P2089600
14	Nipple, 1/8"x close	P0011100	P0011100
15	Tee, 1/8"	P0027100	P0027100
16	Plug, 1/8"	70-236	70-236
17	Bushing, reducing, 1/8x1/4	P2032400	P2032400
18	Pipe, gas inlet	40N6034	40N6034
19	Elbow, 90°x2"	P2091100	P2091100
20	Nipple, 2"x2"	P0021100	P0021100
21	Flange, 2"	V2021900	V2021900
22	Elbow, 90°x1/8"	P2008900	P2008900
23	Tee, 3/8"	P2090600	P2090600
24	Bushing, reducing, 3/8x1/8	P2090700	P2090700
25	Nipple, 3/8"x2"	P2089000	P2089000
26	Ball valve, 3/8"	V2022200	V2022200
27	Pilot regulator	V2022100	V2022100
28	Compression fitting, 1/4" tube	P0004100	P0004100
29	Pilot tube	40N6025	40N6025
30	Gas valve, main	V2021200	V2022300
31	Washer, sealing	S2123500	S2123500
32	Adapter, 1/8FNPTx1/8M	P2089600	P2089600
33	Valve, manual, 1/8x1/8	W2000300	W2000300
34	Adapter, 1/8NPTMx1/4 tube	P2097800	P2097800
35	Plug, 1/8"	70-236	70-236

13.B.14 Gas Train Assembly, Part Numbers (Models 3500 and 4000)

Notes:

Dimensions and specifications subject to change without notice in accordance with our policy of continuous product improvement.

H2403500-

BRADFORD WHITE®
200 Lafayette St.
Middleville, MI 49333
Warranty: (800) 531-2111

www.BradfordWhite.com
Litho in U.S.A. © Bradford White 1908 Document 1438-BW