Installation and Operation Instructions for

Brute Deluxe

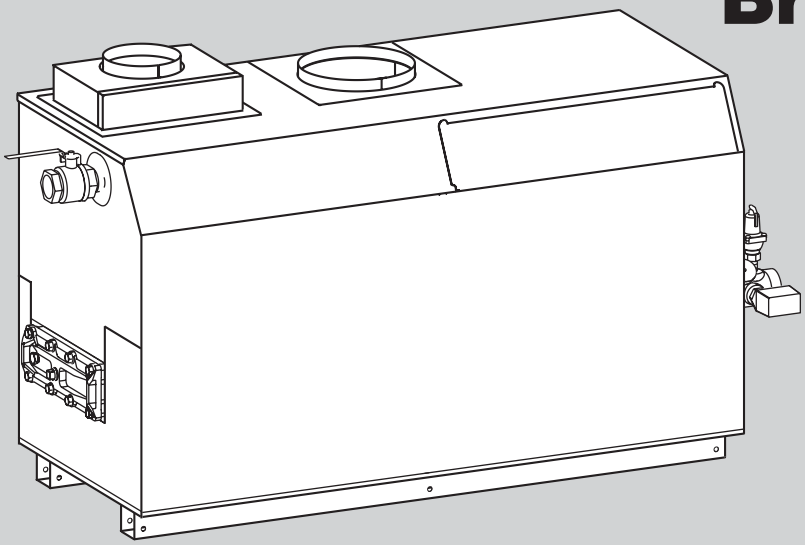

Hydronic Boiler
Model BMT2H

Volume Water Heater
Model BMT2V

Sizes 500–2000 MBTU/h

FOR YOUR SAFETY: This product must be installed and serviced by a professional service technician, qualified in hot water boiler installation and maintenance. Improper installation and/or operation could create carbon monoxide gas in flue gases which could cause serious injury, property damage, or death. Improper installation and/or operation will void the warranty. For indoor installations, as an additional measure of safety, Bradford White strongly recommends installation of suitable Carbon Monoxide detectors in the vicinity of this appliance and in any adjacent occupied spaces.

⚠ WARNING

If the information in this manual is not followed exactly, a fire or explosion may result causing property damage, personal injury or loss of life.

Do not store or use gasoline or other flammable vapors and liquids in the vicinity of this or any other appliance.

WHAT TO DO IF YOU SMELL GAS

- **Do not try to light any appliance.**
- **Do not touch any electrical switch; do not use any phone in your building.**
- **Immediately call your gas supplier from a nearby phone. Follow the gas supplier's instructions.**
- **If you cannot reach your gas supplier, call the fire department.**

Installation and service must be performed by a qualified installer, service agency, or gas supplier.

⚠ AVERTISSEMENT

Assurez-vous de bien suivres les instructions données dans cette notice pour réduire au minimum le risque d'incendie ou d'explosion ou pour éviter tout dommage matériel, toute blessure ou la mort.

Ne pas entreposer ni utiliser d'essence ni d'autres vapeurs ou liquides inflammables dans le voisinage de cet appareil ou de tout autre appareil.

QUE FAIRE SI VOUS SENTEZ UNE ODEUR DE GAZ:

- **Ne pas tenter d'allumer d'appareils.**
- **Ne touchez à aucun interrupteur. Ne pas vous servir des téléphones dansle bâtiment où vous êtes.**
- **Appelez immédiatement votre fournisseur de gaz depuis un voisin. Suivez les instructions du fournisseur.**
- **Si vous ne pouvez rejoindre le fournisseur de gaz, appelez le sservice des incendies.**

L'installation et l'entretien doivent être assurés par un installateur ou un service d'entretien qualifié ou par le fournisseur de gaz.

H2343300H

BRADFORD WHITE®
CORPORATION

WARNING
CANCER AND REPRODUCTIVE HARM
WWW.P65WARNINGS.CA.GOV

As required by the state of California Proposition 65.

TABLE OF CONTENTS

SECTION 1. General Information

1.1 Introduction 3
1.2 Model Identification 3
1.3 Warranty 4
1.4 Dimensions 4
1.5 Locating the Appliance 4
1.6 Locating Pump-Mounted Water Heater with Respect to Storage Tank(s) 4
1.7 Locating Pump-Mounted Boiler with Respect to Return/Supply Header 5
1.8 Locating Appliance for Correct Horizontal Vent/ ... Ducted Air Distance from Outside Wall 5

SECTION 2. Venting and Combustion Air

2.1 Combustion Air 7
2.1.1 Combustion Air From Room 7
2.1.2 Intake Combustion Air 7
2.2 Venting 8
2.2.1 Vent Categories 8
2.2.2 Category I Vent 8
2.2.3 Common Venting Systems 8
2.2.4 Category III Vent 8
2.3 Locating Vent & Combustion Air Terminals 9
2.3.1 Side Wall Vent Terminal 9
2.3.2 Side Wall Combustion Air Terminal 9
2.3.3 Vertical Vent Terminal 9
2.3.4 Vertical Combustion Air Terminal 11
2.4 Common Vent Test — Boilers 11
2.5 Vent Terminals for Outdoor Units 12

SECTION 3. Gas Supply and Piping

3.1 Gas Supply and Piping 12

SECTION 4A. Water Connections — Boiler

4A.1 Heating System Piping: Hot Supply Connections — Boiler 13
4A.2 Cold Water Make-Up — Boiler 14
4A.3 Water Flow Requirements — Boiler 14
4A.4 Freeze Protection — Boiler 14

SECTION 4B. Water Connections — Water Heaters

4B.1 Water System Piping — Water Heater 14
4B.2 Hot Water Supply Piping — Water Heater 15
4B.3 Water Flow Requirements — Water Heater 15
4B.4 Combined Water Heating (potable) and Space Heating — Water Heater 15
4B.5 Freeze Protection – Water Heater 15

SECTION 5. Electrical Connections

5.1 Main Power 21
5.1.1 Changing Single Circuit to Two Circuits 21
5.2 Field Wiring 21
5.3 External Staging Control Wiring 26

SECTION 6. Operating Instructions

6.1 Sequence of Operation 26
6.2 Filling the Boiler System 27
6.3 Operating Temperature Control 27
6.4 External Boiler Operations 28
6.5 Limit Controls 28
6.6 Operating the Burner and Set Up 28
6.6.1 Set Up for 0 to 2500 Feet Altitude 28
6.6.2 High Altitude Adjustment and Set Up 28
6.7 Shutting Down the Brute Deluxe 29
6.8 To Restart the Brute Deluxe 29

SECTION 7. Maintenance

7.1 System Maintenance 29
7.2 Appliance Maintenance and Component Description 29
7.2.1 Burners 30
7.2.2 Filter 30
7.2.3 Gas Valves 30
7.2.4 Manual Reset High Limit Control 30
7.2.5 Temperature Control 30
7.2.6 Ignition Controls 30
7.2.7 Ignitors/Sensor 30
7.2.8 Transformer 30
7.2.9 Blowers 31
7.2.10 Flow Switch 31
7.2.11 Heat Exchanger Coil 31

SECTION 8. Trouble Shooting

8.1 Resolving Lockouts 31
8.2 Delayed Ignition — Possible Causes 32
8.3 Short Cycling — Boiler 32
8.4 Short Cycling — Water Heater 32
8.5 High Gas Consumption 32

SECTION 9. Replacement Parts

9.1 General Information 32
9.2 Parts List 32

SECTION 1.
General Information

USING THIS MANUAL – Because Brute Deluxe Boilers and Water Heaters are identical appliances, with the exception of materials of manufacture, labels and ultimate use application, this manual provides information for the proper installation, operation and maintenance of all products. Where differences exist between the application of the appliances and their operation, the sections pertinent to only one appliance or the other will be so identified.

In the Commonwealth of Massachusetts, this appliance must be installed by a licensed plumber or gas fitter.

⚠ WARNING

The Brute Deluxe hydronic boiler or water heater **must** be installed in accordance with the procedures detailed in this manual, or the Bradford White Corp. warranty may be voided. The installation must conform to the requirements of the local jurisdiction having authority, and, in the United States, to the latest edition of the National Fuel Gas Code, ANSI Z223.1/NFPA54. In Canada, the installation must conform to the latest edition of the Natural Gas and Propane Installation Code, CSA B149.1 and/or local codes. Where required by the authority having jurisdiction, the installation of Bradford White appliances must conform to the Standard for Controls and Safety Devices for Automatically Fired Boilers, ANSI/ASME CSD-1. Any modifications to the unit, its gas controls, or wiring may void the warranty. If field conditions require modifications, consult the factory representative before initiating such modifications.

1.1 Introduction

This manual provides information necessary for the installation, operation, and maintenance of Bradford White Corp. Brute Deluxe copper tube appliances. Read it carefully before installation.

All application and installation procedures should be reviewed completely before proceeding with the installation. Consult the Bradford White factory, or local factory representative, with any issues or questions regarding this equipment. Experience has shown that most operating issues are caused by improper installation.

The Brute Deluxe appliance is protected against over pressurization. A pressure relief valve is fitted to all appliances. It is installed on the outlet header, at the water outlet of the appliance.

IMPORTANT: The inlet gas pressure to the appliance must not exceed 13" W.C. (3.2kPa).

All installations must be made in accordance with:

1). In the U.S., the " National Fuel Gas Code"ANSI Z223.1/NFPA54, Latest Edition and all applicable local codes as required by the Authorities Having Jurisdiction (AHJ), or

2). In Canada, the "Natural Gas and Propane Installation Code", CSA B149.1, latest edition and all applicable local codes as required by the AHJ.

All electrical wiring is to be done in accordance with:

1). In the U.S., the "National Electrical Code" (NEC), ANSI/NFPA 70, latest Edition and all applicable local codes as required by the AHJ, or

2). In Canada, the “Canadian Electrical Code - Part 1”, CSA STD. C22.1 and all applicable local codes as required by the AHJ.

This appliance must be electrically grounded in accordance with the applicable codes and standards referenced above.

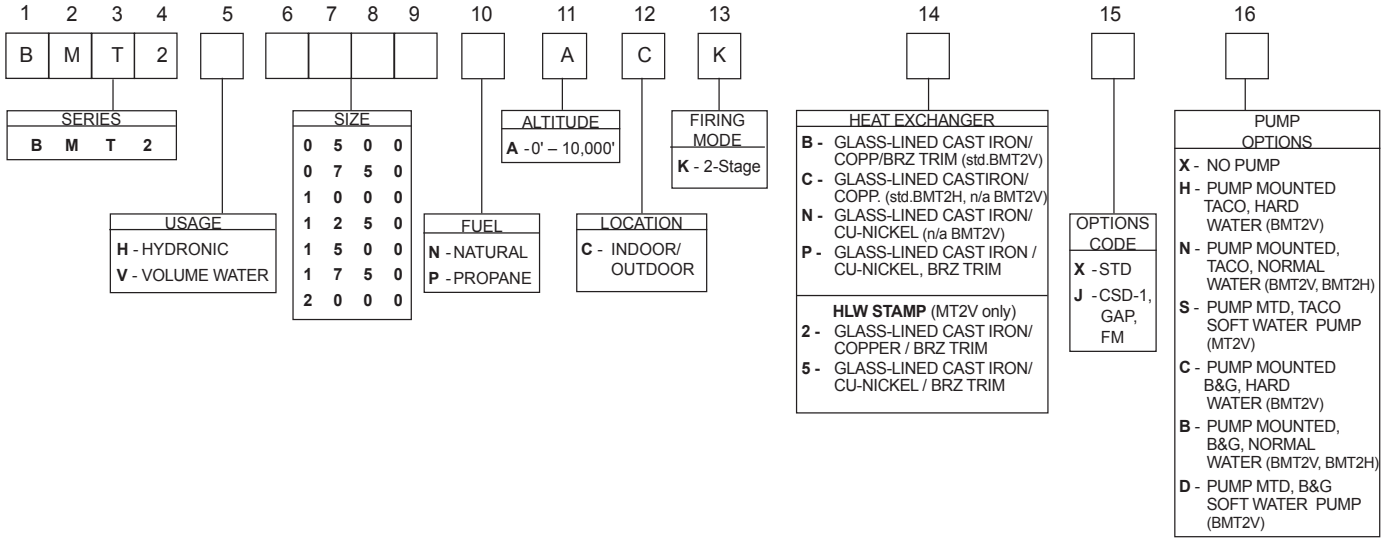

1.2 Model Identification

Consult the rating plate on the unit. The following information describes the model number structure.

1-4 Model Series Designation
B M T 2 = Bradford White, Brute Deluxe

5 Usage
H = Hydronic
V = Volume Water

6-9 Size
0 5 0 0 = 500,000 BTU/h input
0 7 5 0 = 750,000 BTU/h input
1 0 0 0 = 999,000 BTU/h input
1 2 5 0 = 1,250,000 BTU/h input
1 5 0 0 = 1,500,000 BTU/h input
1 7 5 0 = 1,750,000 BTU/h input
2 0 0 0 = 1,999,000 BTU/h input

10 Fuel
N = Natural Gas
P = Propane

11 Location
C = Indoor and Outdoor

12 Firing Mode
K = Two-stage

13 Revision
1 = First version of design

14 Heat Exchanger
B = Glass-lined cast iron / copper / bronze trim (std. on water heaters)
C = Glass-lined cast iron / copper (std. on boilers, n/a on water heaters)
N = Glass-lined cast iron / cupro-nickel (n/a on water heaters)
P = Glass-lined cast iron / cu-nickel / bronze trim

15 Option Code
X = Standard unit
J = CSD-1, FM, IRI, IL

16 Pump Options
X = No Pump
H = Pump mounted BMT2V, TACO, hard water pump
N = Pump mounted (any), TACO, normal water pump
S = Pump mounted BMT2V, TACO, soft water pump
C = Pump mounted BMT2V, B&G, hard water pump
B = Pump mounted (any), B&G, normal water pump
D = Pump mounted BMT2V, B&G, soft water pump

1.3 Warranty

Bradford White Corp. appliances are covered by a limited warranty. Owners should submit online warranty registration at ***www.BradfordWhite.com***.

All warranty claims must be made to an authorized Bradford White wholesale rep / distributor. To find information about the wholesalers in your area, please go to **www.bradfordwhite.com.** and click on 'Wholesalers'.

Claims must include the serial number and model number (this information can be found on the rating plate), installation date, and name of the installer. Shipping costs are not included in the warranty coverage.

Some accessory items are shipped in separate packages. Verify receipt of all packages listed on the packing slip. Inspect everything for damage immediately upon delivery, and advise the carrier of any shortages or damage. Any such claims should be filed with the carrier. The carrier, not the shipper, is responsible for shortages and damage to the shipment whether visible or concealed.

1.4 Dimensions

See Figures 1 and 2.

1.5 Locating the Appliance

The appliance should be located to provide clearances on all sides for maintenance and inspection. It should not be located in an area where leakage of any connections will result in damage to the area adjacent to the appliance or to lower floors of the structure.

When such a location is not available, it is recommended that a suitable drain pan, adequately drained, be installed under the appliance.

The appliance is design certified by CSA-International for installation on combustible flooring; in basements; in closets, utility rooms or alcoves**. Brute Deluxe Boilers or Water Heaters must never be installed on carpeting.** The location for the appliance should be chosen with regard to the vent pipe lengths and external plumbing. The unit shall be installed such that the gas ignition system components are protected from water (dripping, spraying, rain, etc.) during operation and service (circulator replacement, control replacement, etc.). When vented vertically, the Brute Deluxe must be located as close as practical to a chimney or outside wall. If the vent terminal and/or

APPLIANCE SURFACE	REQUIRED CLEARANCE FROM COMBUSTIBLE MATERIAL		RECOMMENDED SERVICE ACCESS CLEARANCE	
	inches	*cm*	inches	*cm*
Left Side	1	*2.5*	24	*61*
Right Side	1	*2.5*	24	*61*
Top	1	*2.5*	12	30
Back	1	*2.5*	12**	*30***
Front	1	*2.5*	36	*91*
Vertical (Category 1) Vent	6*	*15.2**		
Horizontal (Category 3) Vent	per UL1738 venting system supplier's instructions			

*1" (2.5cm) when b-vent is used.
**When vent and/or combustion air connects to the back, recommended clearance is 36" (91cm).

Table 1. Clearances.

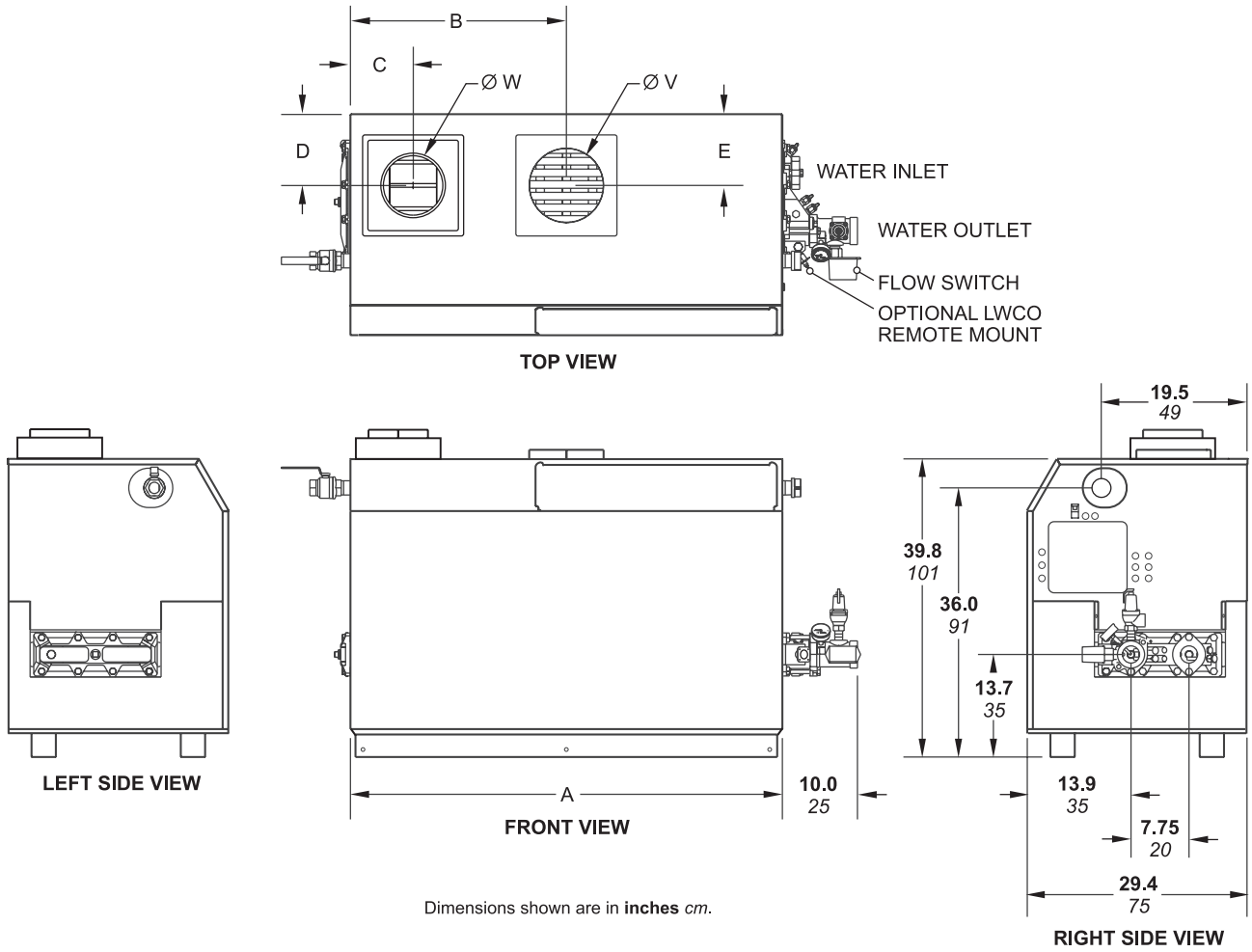

Dimensions shown are in **inches** *cm.*

Unit Size	A		B		C		D		E		Air Conn. W		Vent Conn. V		Shipping Weight[1] lbs	kg
500	**33¾**	*85*	**16¾**	*43*	**6½**	*17*	**10**	*25*	**8**	*20*	**6**	*15*	**8**	*20*	**425**	*193*
750	**45¾**	*116*	**22¾**	*53*	**6½**	*17*	**10**	*25*	**9½**	*24*	**8**	*20*	**10**	*25*	**505**	*229*
1000	**57¾**	*147*	**28¾**	*73*	**6½**	*17*	**10**	*25*	**9½**	*24*	**8**	*20*	**10**	*25*	**615**	*279*
1250	**68¼**	*173*	**34**	*87*	**10¼**	*26*	**10**	*25*	**9**	*23*	**12**	*30*	**12**	*30*	**675**	*306*
1500	**78¾**	*200*	**39½**	*100*	**10¼**	*26*	**10**	*25*	**9**	*23*	**12**	*30*	**12**	*30*	**760**	*345*
1750	**89¼**	*227*	**44¾**	*113*	**10¼**	*26*	**10**	*25*	**9**	*23*	**12**	*30*	**14**	*36*	**825**	*375*
2000	**99¾**	*253*	**49¾**	*127*	**10¼**	*26*	**10**	*25*	**9**	*23*	**12**	*30*	**14**	*36*	**955**	*434*

NOTES: 1. Add 55 lbs (25kg) for pump-mounted units.
Dimensions in inches *cm.*

Figure 1. Dimensional Data (standard units).

combustion air terminal terminate through a wall, and there is potential for snow accumulation in the local area, both terminals should be installed at an appropriate level above grade.

The dimensions and requirements that are shown in Table 1 should be met when choosing the locations for the appliance.

1.6 Locating Pump-Mounted Water Heater with Respect to Storage Tank(s)

For best results, a pump-mounted Brute Deluxe water heater should be located within 15 feet (4.6m) of the storage tank(s). The pump is sized for 30 feet (9.1m) of piping.

If the appliance must be installed with longer piping runs, then larger diameter pipe or tubing shall be used. Consult the factory for assistance.

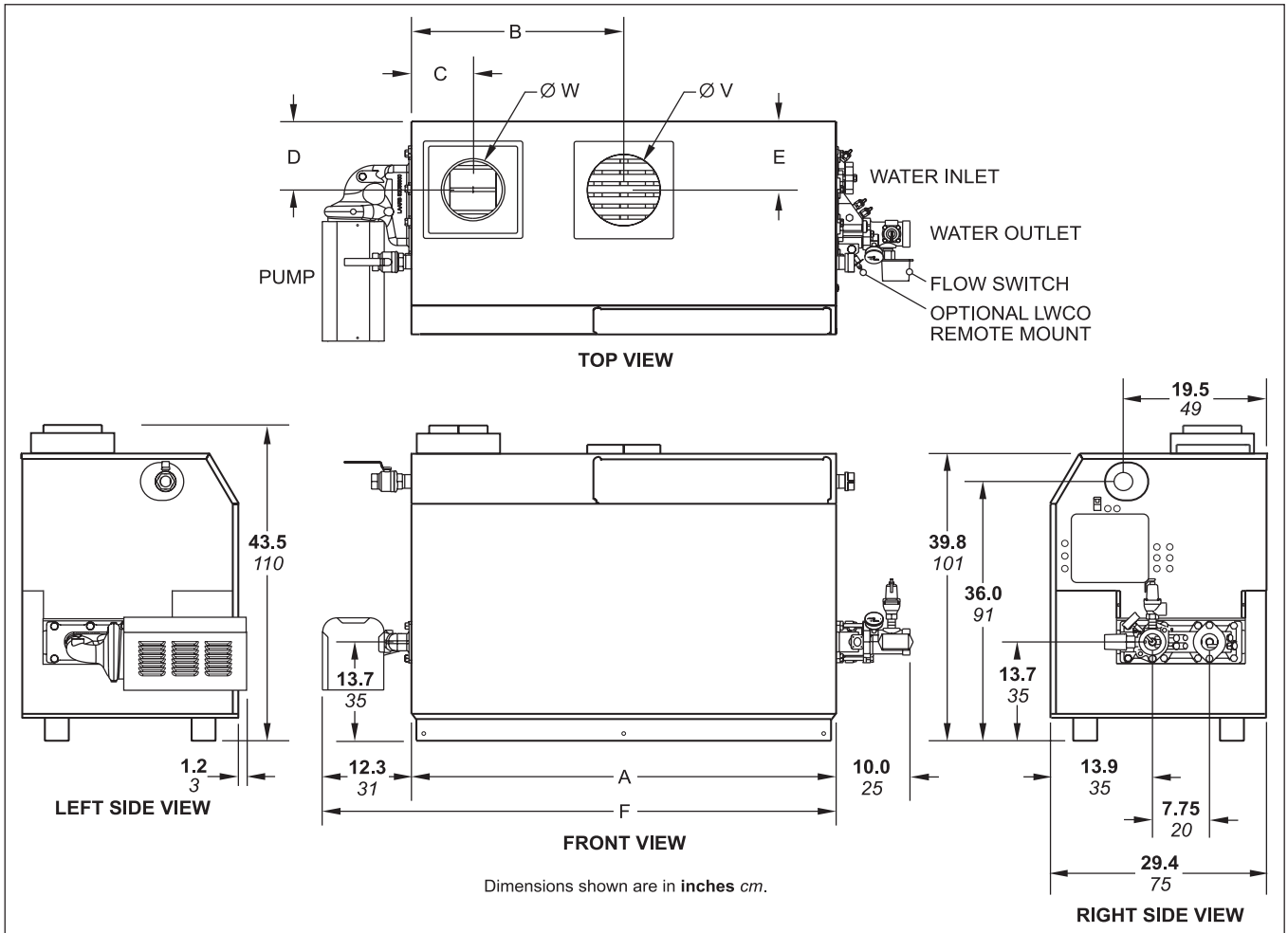

Size	A		B		C		D		E		F		Air Conn. W		Vent Conn. V	
500	**33¾**	*86*	**16¾**	*43*	**6½**	*17*	**10**	*25*	**8**	*20*	**46¼**	*117*	**6**	*15*	**8**	*20*
750	**45¾**	*116*	**22¾**	*58*	**6½**	*17*	**10**	*25*	**9½**	*24*	**58¼**	*148*	**8**	*20*	**10**	*25*
1000	**57¾**	*147*	**28¾**	*73*	**6½**	*17*	**10**	*25*	**9½**	*24*	**70¼**	*178*	**8**	*20*	**10**	*25*
1250	**68¼**	*173*	**34¼**	*87*	**10¼**	*26*	**10**	*25*	**9**	*23*	**80¾**	*205*	**12**	*30*	**12**	*30*
1500	**78¾**	*200*	**39½**	*100*	**10¼**	*26*	**10**	*25*	**9**	*23*	**91¼**	*232*	**12**	*30*	**12**	*30*
1750	**89¼**	*227*	**44¾**	*113*	**10¼**	*26*	**10**	*25*	**9**	*23*	**101¾**	*258*	**12**	*30*	**14**	*36*
2000	**99¾**	*253*	**49¾**	*127*	**10¼**	*26*	**10**	*25*	**9**	*23*	**112¼**	*285*	**12**	*30*	**14**	*36*

Figure 2. Dimensional Data (pump-mounted models).

SIZE	VENT COLLAR SIZE		HORIZONTAL VENT PIPE DIAMETER		INTAKE AIR PIPE DIAMETER		MAX. PIPE LENGTH		MAX. NO. OF ELBOWS	SIDE WALL VENT TERMINAL PART NUMBER	SIDE WALL COMBUSTION AIR TERMINAL PART NUMBER
	in.	*cm*	**in.**	*cm*	**in.**	*cm*	**ft.**	*m*			
500	**8**	*20*	**6**	*15*	**6**	*15*	**50**	*15*	3	CA001401	CA20260701
750	**10**	*25*	**8**	*20*	**8**	*20*	**50**	*15*	3	CA001402	CA20260703
1000	**10**	*25*	**8**	*20*	**8**	*20*	**50**	*15*	3	CA001402	CA20260703
1250	**12**	*30*	**10**	*25*	**10**	*25*	**50**	*15*	3	CA001405	CA20260705
1500	**12**	*30*	**10**	*25*	**10**	*25*	**50**	*15*	3	CA001405	CA20260705
1750	**14**	*36*	**12**	*30*	**12**	*30*	**50**	*15*	3	CA001404	CA20260706
2000	**14**	*36*	**12**	*30*	**12**	*30*	**50**	*15*	3	CA001404	CA20260706

Table 2. Horizontal Vent / Combustion Air Parameters.

1.7 Locating Pump-Mounted Boiler with Respect to Return/Supply Header

For the best results, a pump-mounted Brute Deluxe Boiler should be located within 15 feet (4.6m) of the supply and return headers. The pump is sized for 30 feet (9.1m) of piping.

If the appliance must be installed with longer piping runs, then larger diameter tubing shall be used. Consult the factory for assistance.

1.8 Locating Appliance for Correct Horizontal Vent/Ducted Air Distance from Outside Wall

The forced draft combustion air blower/blowers in the appliance has/have sufficient power to pull air and vent properly when the following guidelines for horizontal air and vent are followed (see Table 2).

NOTE: The vent collar size is larger than the size of the vent pipe that can be used. Vent collar size and horizontal pipe diameters can be found in Table 2. The larger vent collar size is to accommodate Category I (vertical) vent systems.

NOTE: When located on the same wall, the Brute Deluxe combustion air intake terminal must be installed a minimum of 12" (30cm) below the exhaust vent terminal and separated by a minimum of 36 inches (91cm) horizontally.

The air intake terminal must be installed high enough to avoid blockage from snow, leaves and other debris.

SECTION 2. Venting and Combustion Air

2.1 Combustion Air

Brute Deluxe boilers and water heaters must have provisions for combustion and ventilation air in accordance with section 5.3, Air for Combustion and Ventilation, of the National Fuel Gas Code, ANSI Z223.1, or Sections 7.2, 7.3 or 7.4 of CSA B149.1, Installation Codes, or applicable provisions of the local building codes.

A Brute Deluxe appliance may receive combustion air from the space in which it is installed, or it can be ducted directly to the unit from the outside. Ventilation air must be provided in either case.

2.1.1 Combustion Air From Room

In the United States, the most common requirements specify that the space shall communicate with the outdoors in accordance with method 1 or 2, which follow. Where ducts are used, they shall be of the same cross-sectional area as the free area of the openings to which they connect.

Method 1: Two permanent openings, one commencing within 12 inches (30 cm) of the top and one commencing within 12 inches (30 cm) of the bottom, of the enclosure shall be provided. The openings shall communicate directly, or by ducts, with the outdoors or spaces that freely communicate with the outdoors. When directly communicating with the outdoors, or when communicating to the outdoors through vertical ducts, each opening shall have a minimum free area of 1 square inch per 4000 BTU/hr (5.5 square cm/kW) of total input rating of all equipment in the enclosure. When communicating to the outdoors through horizontal ducts, each opening shall have a minimum free area of not less than 1 square inch per 2000 BTU/hr (11 square cm/kW) of total input rating of all equipment in the enclosure. Table 3 shows data for this sizing method, for each Brute Deluxe model.

Method 2: One permanent opening, commencing within 12 inches (30 cm) of the top of the enclosure, shall be permitted. The opening shall directly communicate with the outdoors or shall communicate through a vertical or horizontal duct to the outdoors or spaces that directly communicate with the outdoors and shall have a minimum free area of 1 square inch per 3000 BTU/hr (7 square cm/kW) of the total input rating of all equipment located in the enclosure. This opening must not be less than the sum of the areas of all vent connectors in the confined space.

Other methods of introducing combustion and ventilation air are acceptable, providing they conform to the requirements in the applicable codes listed above.

In Canada, consult local building and safety codes or, in absence of such requirements, follow CSA B149.1.

2.1.2 Intake Combustion Air

The combustion air can be taken through the wall, or through the roof. When taken from the wall, it must be taken from out-of-doors by means of the Bradford White horizontal wall terminal (see Table 2). When taken from the roof, a field-supplied rain cap or an elbow arrangement must be used to prevent entry of rain water

UNIT SIZE	EACH OPENING*	
	SQUARE INCHES	SQUARE CM
500	125	807
750	188	1213
1000	250	1613
1250	313	2020
1500	375	2420
1750	438	2826
2000	500	3226

*Net Free Area in Square Inches / Square cm
Area indicated is for one of two openings; one at floor level and one at the ceiling, so the total net free area could be double the figures indicated.

This chart is for use when communicating directly with the outdoors. For special conditions and alternate methods, refer to the latest edition of ANSI Z223.1.

Note: Check with louver manufacturers for net free area of louvers. Correct for screen resistance to the net free area if a screen is installed. Check all local codes applicable to combustion air.

Table 3. Combustion Air Openings.

(see Figure 3).

Use single-wall galvanized pipe, per Table 4, for the combustion air intake (see Table 2 for appropriate size). Route the intake to the heater as directly as possible. Seal all joints with tape. Provide adequate hangers. The unit must not support the weight of the combustion air intake pipe. Maximum linear pipe length allowed is 50 feet (15.2m). Three elbows have been calculated into the 50-foot (15.2m) linear run. Subtract 10 allowable linear feet (3.0m) for every additional elbow used (see Table 2). When fewer than 3 elbows are used, the maximum linear pipe length allowed is still 50 feet (15.2m).

The connection for the intake air pipe is on the filter box. The Brute Deluxe appliances have venting and combustion air ducting attached to the top.

In addition to air needed for combustion, air shall also be supplied for ventilation, including all air required for comfort and proper working conditions for personnel. The Brute Deluxe loses less than 1 percent of its input rating to the room, but other heat sources may be present.

2.2 Venting

2.2.1 Vent Categories

Depending upon desired Brute Deluxe venting, it may be considered a Category I or a Category III appliance. In general, a vertical vent system will be a Category I system. However, in rare instances, a vertical vent system may be considered Category III. In the U.S., the National Fuel Gas Code (ANSI Z223.1-Latest Edition), or in Canada the CSA B149.1 (latest edition), defines a Category I vent system, and includes rules and tables to size these vent systems. If the Brute Deluxe's vertical vent system does not satisfy the criteria for Category I venting, it must be vented as a Category III system.

All Brute Deluxe vent systems which discharge horizontally (without the use of a power venter) are considered Category III vent systems.

2.2.2 Category I Vent

When vented as a category I appliance, the vent system must conform to the National Fuel Gas Code (ANSI Z223.1-Latest Edition) in the U.S., or in Canada, to CSA B149.1 (latest edition). The vent system must be sized and installed for a Category I Fan-Assisted Appliance.

If chimney height is greater than 25 feet, or if multiple units are vented into the same vertical vent, a barometric damper must be installed on each appliance, such that the flue draft does not exceed (negative) 0.1" w.c.

If using a power venter for any type of Category I venting, the draft should be set between (negative) 0.01 and 0.10" w.c.

TERM	DESCRIPTION
Pipe	Single-wall galvanized steel pipe, 24 gauge minimum (either insulated or non-insulated)
Joint Sealing	Permanent duct tape or aluminum tape

Table 4. Required Combustion Air Piping Material.

2.2.3 Common Venting Systems

Brute Deluxe units are Category I fan-assisted when vented vertically and adhering to all applicable codes.

When common venting Brute Deluxe fan-assisted unit with other appliances through one shared vertical duct called a "common vent", special care must be taken by the installer to ensure safe operation. In the event that the common vent is blocked, it is possible, especially for fan-assisted devices, to vent backwards through non-operating appliances sharing the vent, allowing combustion products to infiltrate occupied spaces. **If the appliances are allowed to operate in this condition, serious injury or death may occur.**

⚠ WARNING

Operation of appliances with a blocked common vent may lead to serious injury or death. If safe operation of all appliances connected to a common vent cannot be assured, including prevention of spillage of flue gasses into living spaces, common venting should not be applied, and appliances should each be vented separately.

Proper vent sizing, construction and safety requirements from the National Fuel Gas Code, ANSI Z223.1 or in Canada, from CSA B149.1 as well as all applicable local codes must be followed.

As an additional precaution, it is recommended that a Carbon Monoxide (CO) alarm be installed in all

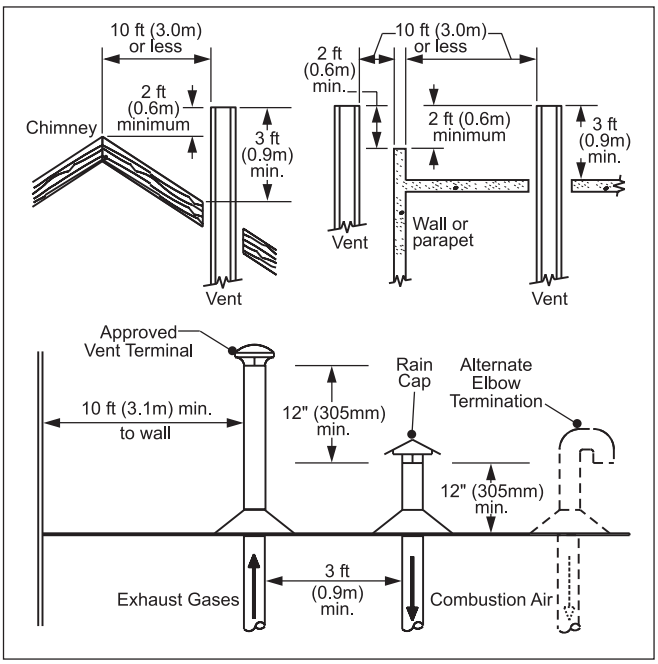

Figure 3. Combustion Air and Vent Through Roof.

enclosed spaces containing combustion appliances.

Brute Deluxe units are not allowed to be vented into a common horizontal Cat III vent system (horizontal discharge or other configuration for Cat III), unless a properly sized vent fan is used, and the common vent system is properly designed by the vent fan manufacturer or a qualified engineer.

Refer to the installation and operating instructions on all appliances to be common vented for instructions, warnings, restrictions and safety requirements. If safe operation of all appliances connected to a common vent cannot be assured, including prevention of spillage of flue gasses into living spaces, common venting should not be applied, and appliances should each be vented separately.

2.2.4 Category III Vent

When the Brute Deluxe is vented with horizontal discharge, it must be installed per this installation manual and the venting system manufacturer's installation instructions. The vent system must be sealed stainless steel (see Table 5).

Route the vent pipe to the heater as directly as possible. Seal all joints and provide adequate hangers as required in the venting system manufacturer's Installation Instructions. Horizontal portions of the venting system must be supported to prevent sagging and may not have any low sections that could trap condensate. The unit must not support the weight of the vent pipe. Horizontal runs must slope downwards not less than ¼ inch per foot (2 cm/m) from the unit to the vent terminal. Reference Table 2 for the size of the Category III vent system. Up to three elbows can be used with 50 linear feet (15.2m) of pipe. Subtract 10 allowable linear feet (3.0m) for every additional elbow used.

⚠ WARNING

The outdoor vent terminal gets hot. Unit must be installed in such a way as to reduce the risk of burns from contact with the vent terminal.

2.3 Locating Vent & Combustion Air Terminals

2.3.1 Side Wall Vent Terminal

The appropriate Bradford White side wall vent hood must be used, and is listed in the installation and operation manual. The terminal provides a means of installing the vent piping through the building wall, and must be located in accordance with ANSI Z223.1/NFPA 54 and applicable local codes. In Canada, the installation must be in accordance with CSA B149.1 or .2 and local applicable codes. Consider the following when installing the terminal:

1. Figure 4 shows the requirements for mechanical vent terminal clearances for the U.S. and Canada.
2. Vent terminals for condensing appliances or appliances with condensing vents are **not** permitted to terminate above a public walkway, or over an area where condensate or vapor could create a nuisance or hazard.
3. Locate the vent terminal so that vent gases cannot be drawn into air conditioning system inlets.
4. Locate the vent terminal so that vent gases cannot enter the building through doors, windows, gravity inlets or other openings. When possible, locations under windows or near doors should be avoided.
5. Locate the vent terminal so that it cannot be blocked by snow. The National Fuel gas code requires that it be at a minimum of 12" above grade. In a location that has the possibility of snow accumulation, it is critical the installer places the vent at least 12" higher than the maximum potential snow line. Seek local municipalities and their codes for appropriate installation techniques.
6. Locate the terminal so the vent exhaust does not settle on building surfaces or other nearby objects. Vent products may damage such surfaces or objects.
7. If the boiler or water heater uses ducted combustion air from an intake terminal located on the same wall, locate the vent terminal at least 3 feet (0.9m) horizontally from the combustion air terminal, and locate the vent terminal at least 1 foot (0.3m) above the combustion air terminal.

TERM	DESCRIPTION
Pipe	Must comply with UL Standard 1738 such as Type 29-4C Stainless Steel (either insulated or non-insulated).
Joint Sealing	Follow vent manufacturer's instructions

Table 5. Required Horizontal Venting Material.

2.3.2 Side Wall Combustion Air Terminal

The Bradford White side wall combustion air terminal (see Table 2) must be used when the unit takes its combustion air through a duct from a side wall. Consider the following when installing the terminal:

1. Do not locate the air inlet terminal near a source of corrosive chemical fumes (e.g., cleaning fluid, chlorinated compounds, etc.)
2. Locate the terminal so that it will not be subject to damage by accident or vandalism.
3. Locate the combustion air terminal so that it cannot be blocked by snow. The National Fuel gas code requires that it be at a minimum of 12" above grade. Depending on local conditions, the installer should ensure that it remains at least 12" above the maximum potential snow line. Seek local municipalities and their codes for appropriate installation techniques.

⚠ WARNING: It is critical that the combustion air intake and the vent terminals remain at least 12" above the maximum potential snow line. If either the vent terminal or the air terminal is blocked by snow, there may be potential for the unit to produce excess carbon monoxide and or recirculate flue gasses into the building/dwelling.

		U.S. Installations (see note 1)	Canadian Installations (see note 2)
A=	Clearance above grade, veranda, porch, deck, or balcony	12 inches (30 cm)	12 inches (30 cm)
B=	Clearance to window or door that may be opened	4 feet (1.2 m) below or to side of opening; 1 foot (30 cm) above opening	36 inches (91 cm)
C=	Clearance to permanently closed window	See note 4	See note 5
D=	Vertical clearance to ventilated soffit located above the terminal within a horizontal distance of 2 feet (61cm) from the center line of the terminal	See note 4	See note 5
E=	Clearance to unventilated soffit	See note 4	See note 5
F=	Clearance to outside corner	See note 4	See note 5
G=	Clearance to inside corner	See note 4	See note 5
H=	Clearance to each side of center line extended above meter/regulator assembly	See note 4	3 feet (91 cm) within a height 15 feet above the meter/regulator assembly
I=	Clearance to service regulator vent outlet	See note 4	3 feet (91 cm)
J=	Clearance to nonmechanical air supply inlet to building or the combustion air inlet to any other appliance	4 feet (1.2 m) below or to side of opening; 1 foot (30 cm) above opening	36 inches (91 cm)
K=	Clearance to a mechanical air supply inlet	3 feet (91 cm) above if within 10 feet (3 m) horizontally	6 feet (1.83 m)
L=	Clearance above paved sidewalk or paved driveway located on public property	Vent termination not allowed in this location for category IV appliances. For Category III appliances, vent must terminate at least 7 feet (2.13m) above the sidewalk or driveway.	Vent termination not allowed in this location for category IV appliances. A vent shall not terminate directly above a sidewalk or paved driveway that is located between two single family dwellings and serves both dwellings. For Category III appliances that do not violate the previous condition, vent must terminate at least 7 feet (2.13m) above the sidewalk or driveway.
M=	Clearance under veranda, porch, deck, or balcony	See note 4	12 inches (30 cm) (see note 3)

Notes:
1. In accordance with the current ANSI Z223.1 / NFPA 54 National Fuel Gas Code.
2. In accordance with the current CSA-B149.1 Installation Codes.
3. Permitted only if veranda, porch, deck, or balcony is fully open on a minimum of two sides beneath the floor.
4. For clearances not specified in ANSI Z223.1 / NFPA 54, clearance is in accordance with local installation codes and the requirements of the gas supplier.
5. For clearances not specified in CSA-B149.1, clearance is in accordance with local installation codes and the requirements of the gas supplier.

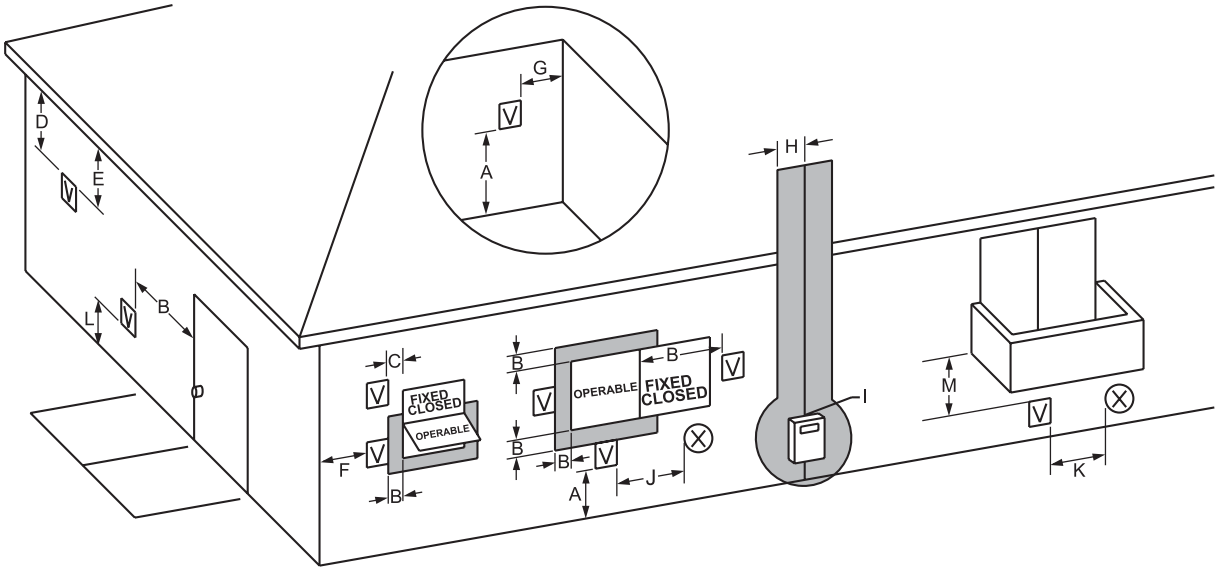

Figure 4. Combustion Air and Vent Through Side Wall.

Personal injury or DEATH may occur. Natural snowfall, drifting, and banking should all be taken into account when locating the terminals in a potential snow environment.

4. If the Brute Deluxe is side-wall vented to the same wall, locate the vent terminal at least 3 feet (0.9m) horizontally from the combustion air terminal, and locate the vent terminal at least 1 foot (0.3m) above the combustion air terminal (see Figure 4).

2.3.3 Vertical Vent Terminal

When the unit is vented through the roof, the vent must extend at least 3 feet (0.9m) above the point at which it penetrates the roof. It must extend at least 2 feet (0.6m) higher than any portion of a building within a horizontal distance of 10 feet (3.0m), and high enough above the roof line to prevent blockage from snow. When the combustion air is taken from the roof, the combustion air must terminate at least 12" (30cm) below the vent terminal (see Figure 3). Seek local municipalities and their codes for appropriate installation techniques.

From Massachusetts Rules and Regulations 248 CMR 5.08:

(a) For all side wall horizontally vented gas fueled equipment installed in every dwelling, building or structure used in whole or inpart for residential purposes, including those owned or operated by the Commonwealth and where the side wall exhaust vent termination is less than seven (7) feet above finished grade in the area of the venting, including but not limited to decks and porches, the following requirements shall be satisfied:

1. INSTALLATION OF CARBON MONOXIDE DETECTORS. At the time of installation of the side wall horizontal vented gas fueled equipment, the installing plumber or gasfitter shall observe that a hard-wired carbon monoxide detector with an alarm and battery back-up is installed on the floor level where the gas equipment is to be installed. In addition, the installing plumber or gasfitter shall observe that a battery operated or hard-wired carbon monoxide detector with an alarm is installed on each additional level of the dwelling, building or structure served by the side wall horizontal vented gas fueled equipment. It shall be the responsibility of the property owner to secure the services of qualified licensed professionals for the installation of hard-wired carbon monoxide detectors.
   a. In the event that the side wall horizontally vented gas fueled equipment is installed in a crawl space or an attic, the hard-wired carbon monoxide detector with alarm and battery back-up may be installed on the next adjacent floor level.
   b. In the event that the requirements of this subdivision cannot be met at the time of completion of installation, the owner shall have a period of thirty (30) days to comply with the above requirements; provided, however, that during said thirty (30) day period, a battery operated carbon monoxide detector with an alarm shall be installed.
2. APPROVED CARBON MONOXIDE DETECTORS. Each carbon monoxide detector as required in accordance with the above provisions shall comply with NFPA 720 and be ANSI/UL 2034 listed and IAS certified.
3. SIGNAGE. A metal or plastic identification plate shall be permanently mounted to the exterior of the building at a minimum height of eight (8) feet above grade directly in line with the exhaust vent terminal for the horizontally vented gas fueled heating appliance or equipment. The sign shall read, in print size no less than one-half (½) inch in size, "GAS VENT DIRECTLY BELOW. KEEP CLEAR OF ALL OBSTRUCTIONS".
4. INSPECTION. The state or local gas inspector of the side wall horizontally vented gas fueled equipment shall not approve the installation unless, upon inspection, the inspector observes carbon monoxide detectors and signage installed in accordance with the provisions of 248 CMR 5.08(2)(a) 1 through 4.

(b) EXEMPTIONS: The following equipment is exempt from 248 CMR 5.08(2)(a) 1 through 4:

1. The equipment listed in Chapter 10 entitled "Equipment Not Required To Be Vented" in the most current edition of NFPA 54 as adopted by the Board; and
2. Product Approved side wall horizontal vented gas fueled equipment installed in a room or structure separate from the dwelling, building or structure used in whole or in part for residential purposes.

(c) MANUFACTURER REQUIREMENTS - GAS EQUIPMENT VENTING SYSTEM PROVIDED. When the manufacturer of Product Approved side wall horizontally vented gas equipment provides a venting system design or venting system components with the equipment, the instructions provided by the manufacturer for installation of the equipment and the venting system shall include:

1. Detailed instructions for the installation of the venting system design or the venting system components; and
2. A complete parts list for the venting system design or venting system.

(d) MANUFACTURER REQUIREMENTS - GAS EQUIPMENT VENTING SYSTEMNOT PROVIDED. When the manufacturer of a Product Approved side wall horizontally vented gas fueled equipment does not provide the parts for venting the fuel gases, but identifies "special venting systems", the following requirements shall be satisfied by the manufacturer:

1. The identification of each "special venting system" shall include either the listing of the website, phone number or manufacturer's address where the venting system installation instructions can be obtained; and
2. The "special venting systems" shall be Product Approved by the Board, and the instructions provided with that system shall include a parts list and detailed installation instructions.

(e) A copy of all installation instructions for the Product Approved side wall horizontally vented gas fueled equipment, and all the venting instructions, parts lists, and/or design instructions for the venting system shall remain with the appliance or equipment at the completion of the installation.
Manufacturers' websites where venting system installation instructions may be obtained is located on the Bradford White website at: **http://www.BradfordWhite.com**.

2.3.4 Vertical Combustion Air Terminal

When combustion air is taken from the roof, a field-supplied rain cap or an elbow arrangement must be used to prevent entry of rain water (see Figure 3). The opening on the end of the terminal must be at least 12" (30cm) above the point at which it penetrates the roof, and high enough above the roof line to prevent blockage from snow. When the vent terminates on the roof, the combustion air must terminate at least 12" (30cm) below the vent terminal.

2.4 Common Vent Test — Boilers

When an existing boiler is removed from a common venting system, the common venting system is likely to be too large for proper venting of the appliances remaining connected to it.

At the time of removal of an existing boiler, the following steps shall be followed with each appliance remaining connected to the common venting system placed in operation, while the other appliances remaining connected to the common venting system are not in operation.

1. Seal any unused openings in the common venting system.
2. Visually inspect the venting system for proper size and horizontal pitch and determine there is no blockage or restriction, leakage, corrosion and other deficiencies which could cause an unsafe condition.
3. Insofar as it is practical, close all building doors and windows and all doors between the space in which the appliances remaining connected to the common venting system are located and other spaces of the building. Turn on clothes dryers and any appliance not connected to the common venting system. Turn on any exhaust fans, such as range hoods and bathroom exhausts, so they will operate at maximum speed. Do not operate a summer exhaust fan. Close fireplace dampers.
4. Place in operation the appliance being inspected. Follow the lighting instructions. Adjust thermostat so appliance will operate continuously.
5. Test for spillage at the draft hood relief opening after 5 minutes of main burner operation. Use the flame of a match or candle, or smoke from a cigarette, cigar or pipe.
6. After it has been determined that each appliance remaining connected to the common venting system properly vents when tested as outlined above, return doors, windows, exhaust fans, fireplace dampers and any other gas burning appliance to their previous conditions of use.
7. Any improper operation of the common venting system should be corrected so that the installation conforms to the National Fuel Gas Code, ANSI Z223.1/NFPA 54 and/or CSA B149.1, Installation Codes. When resizing any portion of the common venting system, the common venting system should be resized to approach the minimum size as determined using the appropriate tables in Part II of the National Fuel Gas Code, ANSI Z223.1/NFPA 54 and/or CSA B149.1, Installation Codes.

SIZE	OUTDOOR VENT TERMINAL	OUTDOOR COMBUSTION AIR TERMINAL
500	20254703	CA014701
750	20254705	CA014702
1000	20254705	CA014702
1250	D2007700	CA014703
1500	D2007700	CA014703
1750	D2007800	CA014704
2000	D2007800	CA014704

Table 6. Vent Terminals for Outdoor Units.

2.5 Vent Terminals for Outdoor Units

For outdoor applications, the vent and combustion air openings must be covered with proper terminals to prevent rain, snow and other objects from falling into the Brute Deluxe.

If local codes allow, outdoor installations may use 1' of appropriately sized galvanized single wall or B-Vent and a rain cap for exhaust vent termination in the default configuration (venting out of the top). Note that some local codes may require a higher vertical vent height, extending above any perimeter fencing, etc. In installations where the appearance of the vent is objectionable, the low profile vent terminals in Table 6 may be used.

Combustion air inlets consist of appropriately sized galvanized pipe and elbows to allow the open end to face

SIZE AND GAS TYPE	DISTANCE FROM GAS METER OR LAST STAGE REGULATOR 0-100'	100-200'	200-300'
500 natural	1½"	2"	2"
500 propane	1"	1½"	1½"
750 natural	2"	2"	2½"
750 propane	1½"	1½"	2"
1000 natural	2"	2½"	3"
1000 propane	1½"	2"	2½"
1250 natural	2½"	2½"	3"
1250 propane	2"	2"	2½"
1500 natural	2½"	3"	3"
1500 propane	2"	2½"	2½"
1750 natural	2½"	3"	3"
1750 propane	2"	2½"	2½"
2000 natural	3"	3"	3½"
2000 propane	2½"	2½"	3"
Metric Equivalent			
SIZE AND GAS TYPE	DISTANCE FROM GAS METER OR LAST STAGE REGULATOR *0-31m*	*31-61m*	*61-91m*
500 natural	*3.8cm*	*5.1cm*	*5.1cm*
500 propane	*2.5cm*	*3.8cm*	*3.8cm*
750 natural	*5.1cm*	*5.1cm*	*6.4cm*
750 propane	*3.8cm*	*3.8cm*	*5.1cm*
1000 natural	*5.1cm*	*6.4cm*	*7.6cm*
1000 propane	*3.8cm*	*5.1cm*	*6.4cm*
1250 natural	*6.4cm*	*6.4cm*	*7.6cm*
1250 propane	*5.1cm*	*5.1cm*	*6.4cm*
1500 natural	*6.4cm*	*7.6cm*	*7.6cm*
1500 propane	*5.1cm*	*6.4cm*	*6.4cm*
1750 natural	*6.4cm*	*7.6cm*	*7.6cm*
1750 propane	*5.1cm*	*6.4cm*	*6.4cm*
2000 natural	*7.6cm*	*7.6cm*	*8.9cm*
2000 propane	*6.4cm*	*6.4cm*	*7.6cm*

NOTES: 1. These figures are based on 1/2" (0.12kPa) water column pressure drop.
2. Check supply pressure and local code requirements before proceeding with work.
3. Pipe fittings must be considered when determining gas pipe sizing.

Table 7. Gas Piping Sizes.

down aside the boiler. This is available as a Commercial Kit from the manufacturer.

Part numbers for the low profile terminals to cover the vent and combustion air openings are shown in Table 6.

SECTION 3.
Gas Supply and Piping

3.1 Gas Supply and Piping

Gas piping should be supported by suitable hangers or floor stands, not by the appliance.

Brute Deluxe's gas train allows the user to pipe the gas from either the right side or the left side of the unit. As shipped, the right side of the gas train is capped off, and there is a manual valve on the left side. If desired, the manual valve on the left side of the gas train may be moved to the right side, and the cap on the right side may be moved to the left.

Review the following instructions before proceeding with the installation.

1. Verify that the appliance is fitted for the proper type of gas by checking the rating plate. Brute Deluxe appliances are equipped to operate at elevations up to 10,000 feet (3050m). Brute Deluxe appliances may be adjusted to operate properly at altitudes above 2500 feet (see Section 6.6.2) and the input will be reduced if the heating value of the gas supply is below sea level values.
2. The maximum inlet gas pressure must not exceed 13" W.C (3.2kPa). The minimum inlet gas pressure is 5" W.C. (1.2kPa).
3. Refer to Table 7, size supply.
4. Run gas supply line in accordance with all applicable codes.
5. Locate and install manual shutoff valves in accordance with state and local requirements.
6. A sediment trap must be provided upstream of the gas controls.
7. All threaded joints should be coated with piping compound resistant to action of liquefied petroleum gas.
8. The appliance and its individual shutoff valve must be disconnected from the gas supply piping during any pressure testing of that system at test pressures in excess of 1/2 PSIG (3.45kpa).
9. The unit must be isolated from the gas supply system by closing its individual manual shutoff valve during any pressure testing of the gas supply piping system at test pressures equal to or less than 1/2 PSIG (3.45kpa).
10. The appliance and its gas connection must be leak tested before placing it in operation.
11. Purge all air from gas lines.

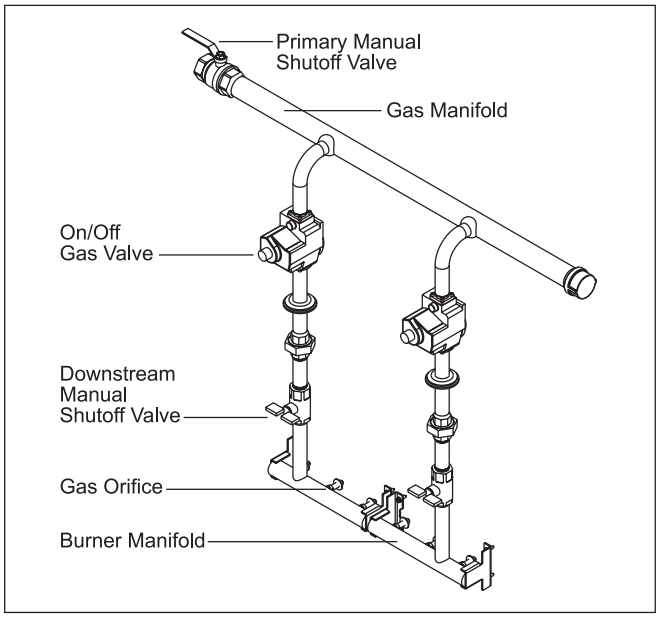

Figure 5. Typical Gas Train Configuration.

⚠ WARNING

Do not use open flame to check for leaks. An open flame could lead to explosion, which could result in property damage, serious injury or death.

NOTE: The Brute Deluxe appliance and all other gas appliances sharing the gas supply line must be firing at maximum capacity to properly measure the inlet supply pressure. The pressure can be measured at the supply pressure port on the gas valve. Low gas pressure could be an indication of an undersized gas meter, undersized gas supply lines and/or an obstructed gas supply line.

SECTION 4A.

Unit Size	20°F		25°F		30°F		35°F	
	flow gpm	H/L feet	flow gpm	H/L feet	flow gpm	H/L feet	flow gpm	H/L feet
500	43	1.7	34	1.1	28	0.9	24	0.7
750	64	3.3	51	2.3	43	1.7	36	1.2
1000	85	5.0	68	3.6	57	3.1	49	2.2
1250	106	8.1	85	6.1	71	4.7	61	3.4
1500	128	10.0	102	7.2	85	5.5	73	4.2
1750	N/R	N/R	119	10.5	99	8.4	85	5.8
2000	N/R	N/R	136	12.5	113	10.4	97	8.3
Metric Equivalent								
Unit Size	11°C		14°C		17°C		19°C	
	flow lpm	H/L m	flow lpm	H/L m	flow lpm	H/L m	flow lpm	H/L m
500	161	0.5	129	0.3	107	0.3	92	0.2
750	241	1.0	193	0.7	161	0.5	138	0.4
1000	321	1.5	257	1.1	214	0.9	184	0.7
1250	401	2.5	322	1.9	269	1.4	231	1.0
1500	483	3.0	386	2.2	322	1.7	276	1.3
1750	N/R	N/R	451	3.2	375	2.6	322	1.8
2000	N/R	N/R	515	3.8	429	3.2	368	2.5

Notes: gpm = gallons per minute, lpm = liters per minute, H/L = headloss, ft = headloss in feet, m = headloss in meters. Maximum temperature rise is 35°F (19°C), as shown. Headloss is for boiler's heat exchanger only. N/R = not recommended.

Table 8. Water Flow Requirements — BMT2H.

Water Connections — Boiler

4A.1 Heating System Piping: Hot Supply Connections — Boiler

NOTE: This appliance must be installed in a closed pressure system with a minimum of 12 psi (82.7kPa) static pressure at the boiler.

Hot water piping should be supported by suitable hangers or floor stands. Do not support piping with this appliance. Due to expansion and contraction of copper pipe, consideration should be given to the type of hangers used. Rigid hangers may transmit noise through the system resulting from the piping sliding in the hangers. It is recommended that padding be used when rigid hangers are installed. Maintain 1" clearance to combustibles for hot water pipes.

Pipe the discharge of the relief valve (full size) to a drain or in a manner to prevent injury in the event of pressure relief. Install an air purger, an air vent, a diaphragm-type expansion tank, and a hydronic flow check in the system supply loop. Minimum fill pressure must be 12psig (82.7kPa). Install shutoff valves where required by code.

Suggested piping diagrams are shown (see Figures 6 through 10). These diagrams are meant only as a guide. Components required by local codes must be properly installed.

4A.2 Cold Water Make-Up — Boiler

1. Connect the cold water supply to the inlet connection of an automatic fill valve.
2. Install a suitable back flow preventer between the automatic fill valve and the cold water supply.
3. Install shut off valves where required.

NOTE: The boiler, when used in connection with a refrigeration system, must be installed so the chilled medium is piped in parallel with the boiler with appropriate valves to prevent the chilled medium from entering the boiler.

The boiler piping system of a hot water heating boiler connected to heating coils located in air handling appliances where they may be exposed to refrigerated air circulation must be equipped with flow control valves or other automatic means to prevent gravity circulation of the boiler water during the cooling cycle.

A boiler installed above radiation level, or as required by the authority having jurisdiction, must be provided with a low water cutoff device either as a part of the boiler or at the time of boiler installation.

4A.3 Water Flow Requirements — Boiler

A hydronic heating (closed loop) application re-circulates the same fluid in the piping system. As a result, no new minerals or oxygen is introduced into the system. To ensure a proper operating temperature leading to long boiler life, a flow rate has been established based on the fluid temperature rise for this specific size boiler.

Pump-mounted boilers can be ordered for use in primary secondary piping systems. The pumps used are sized for the headloss through the heater, plus 30 feet (9.1m) of full-sized piping (same size as boiler outlet) and a normal number of fittings.

Table 8 specifies water flow rates for boilers, which will enable the user to size a pump. The headloss shown is for the heater only, and the user will need to add the headloss of the system piping to properly size the pump.

The minimum inlet water temperature for the Brute Deluxe is 120°F (49°C) to avoid condensing on the copper coils.

4A.4 Freeze Protection — Boiler

Boiler installations are not recommended in areas where the danger of freezing exists unless proper precautions are made for freeze protection. A non toxic, heating system, anti-freeze may be added to the hydronic system provided that the concentration does not exceed 50% and the anti freeze contains an anti foamant. When a 50/50 mixture is used, increase the water flow requirements by 15%, and increase the headloss requirements by 20%.

Power outage, interruption of gas supply, failure of system components, activation of safety devices, etc., may prevent a boiler from firing. Any time a boiler is subjected to freezing conditions, and the boiler is not able to fire, and/or the water is not able to circulate, there is a risk of freezing in the boiler or in the pipes in the system. When water freezes, it expands. This can result in bursting of pipes in the system, or damage to the boiler, which could result in leaking or flooding conditions.

IMPORTANT NOTES: Different glycol products may provide varying degrees of protection. Glycol products must be maintained properly in a heating system, or they may become ineffective. Consult the glycol specifications, or the glycol manufacturer, for information about specific products, maintenance of solutions, and set up according to your particular conditions.

SECTION 4B. Water Connections — Water Heaters

4B.1 Water System Piping — Water Heater

Hot water piping should be supported by suitable hangers or floor stands. Do not support piping with this appliance. Due to expansion and contraction of copper pipe, consideration should be given to the type of hangers used. Rigid hangers may transmit noise through the system resulting from the piping sliding in the hangers. It is recommended that padding be used when rigid hangers are installed.

The Brute Deluxe can be used with several dif-

ferent types of readily available storage tanks. A pump draws water from the storage tank and pumps the water through the heater and back into the tank. Pump-mounted units have a circulating pump built into the water heater. The pumps used are sized for the headloss through the heater, plus 30 feet (9.1m) of full-sized piping (same size as boiler outlet) and a normal number of fittings. Pumps used on pump-mounted unit are sized for soft/normal or hard water, so make sure a pump-mounted unit matches the water quality of the installation.

Pipe the outlet from the heater's relief valve such that any discharge from the relief valve will be conducted to a suitable place for disposal when relief occurs. Do not reduce line size or install any valves in this line. The line must be installed to allow complete drainage of both the valve and the line.

Suggested piping diagrams are shown in Figures 11 through 14. These diagrams are meant only as a guide. Components required by local codes must be properly installed.

The minimum inlet water temperature for the Brute Deluxe is 120°F (49°C) to avoid condensing on the copper coils.

4B.2 Hot Water Supply Piping — Water Heater

Follow the tank manufacturer's guidelines for completion of the hot water system connections.

NOTE: A listed temperature and pressure relief valve listed as complying with the Standard for Relief Valves and Automatic Gas Shutoff Devices for Hot Water Supply Systems (ANSI Z21.22 / CSA 4.4) of suitable discharge capacity must be installed in the separate storage tank system.

If the Brute Deluxe water heater is installed in a closed water supply system, such as one having a backflow preventer in the cold water supply line, the relief valve may discharge periodically, due to thermal expansion. Means (such as a properly-sized expansion tank) shall be provided to control thermal expansion. Contact the water supplier or local plumbing inspector on how to control this situation.

4B.3 Water Flow Requirements — Water Heater

In a water heating application (an open system), new water is constantly being introduced. With the new water comes a fresh supply of minerals that can be deposited on the unit's heat exchanger. This is commonly known as scaling. The amount of minerals will depend upon the hardness of the water. Water can also be aggressive, and can erode metals, including copper, if the water is moved too quickly. The water flow requirements for the Brute Deluxe water heater are based upon the hardness of the water. The water flow is kept high enough to prevent scaling, but low enough to prevent tube erosion. For extremely soft or hard water, cupro-nickel tubes are available. Contact a Bradford White Representative if you have questions or concerns about water quality.

Pump-mounted water heaters can be ordered with standard pumps for soft or normal water or with pumps for hard water. The pumps used are sized for the headloss through the heater, plus 30 feet (9.1m) of full-sized piping (same size as heater outlet) and a normal number of fittings.

Table 9 specifies water flow rates for water heaters, which will enable the user to size a pump. The headloss shown is for the heater only, and the user will need to add the headloss of the piping system to properly size the pump.

4B.4 Combined Water Heating (potable) and Space Heating — Water Heater

NOTE: These systems are not allowed in the Commonwealth of Massachusetts.

Piping and components connected to this water heater for the space heating application shall be suitable for use with potable water.

Toxic chemicals, such as used for boiler treatment, shall not be introduced into the potable water used for space heating.

This water heater when used to supply potable water shall not be connected to any heating system or component(s) previously used with a non-potable water heating appliance.

When the system requires water for heating at temperatures higher than required for other uses, an anti-scald mixing or tempering valve shall be installed to temper the water for those uses in order to reduce scald hazard potential.

4B.5 Freeze Protection – Water Heater

Although Brute Deluxe water heaters are design-certified for outdoor installations, such installations are not recommended in areas subject to freezing temperatures, unless proper precautions are taken.

Power outage, interruption of gas supply, failure of system components, activation of safety devices, etc., may prevent a heater from firing. **Any time a heater is subjected to freezing conditions, and the heater is not able to fire, and/or the water is not able to circulate, there is a risk of freezing in the heater or in the pipes in the system.** When water freezes, it expands. This can result in bursting of pipes in the system, or damage to the heater, which could result in leaking or flooding conditions.

Contact the local factory representative or Bradford White for additional information.

SECTION 5. Electrical Connections

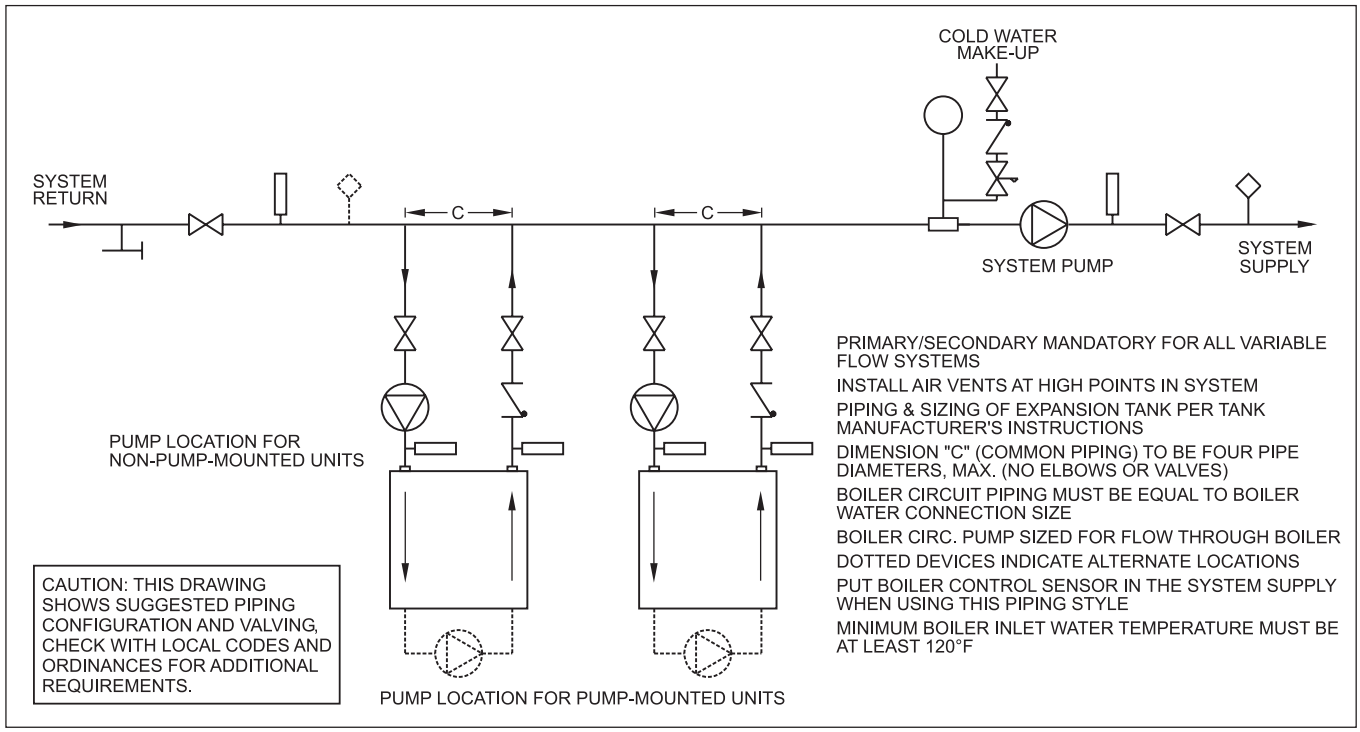

Figure 6. Hydronic Piping — Multiple Boilers, Primary Secondary System.

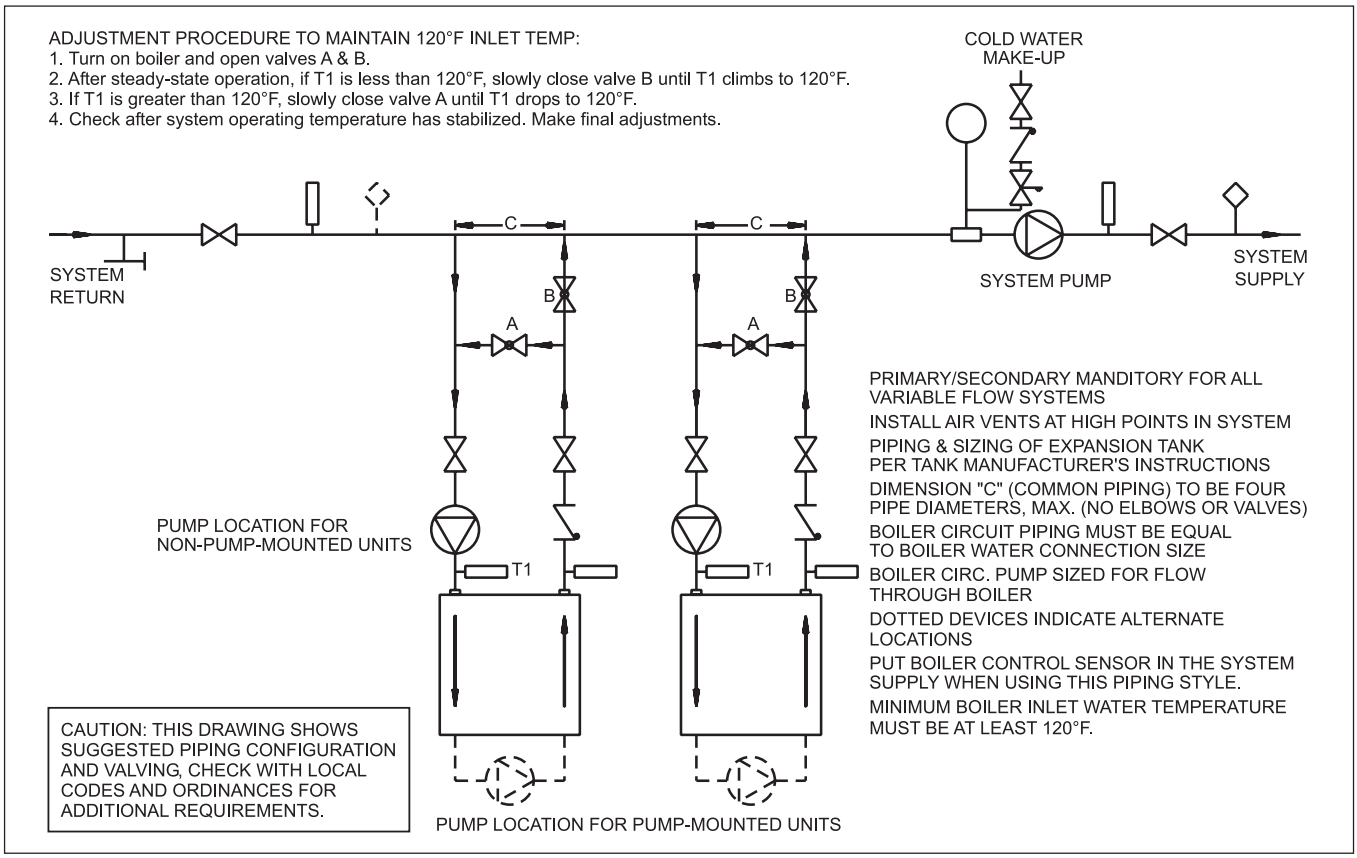

Figure 7. Hydronic Piping — Multiple Boilers, Low Temperature System.

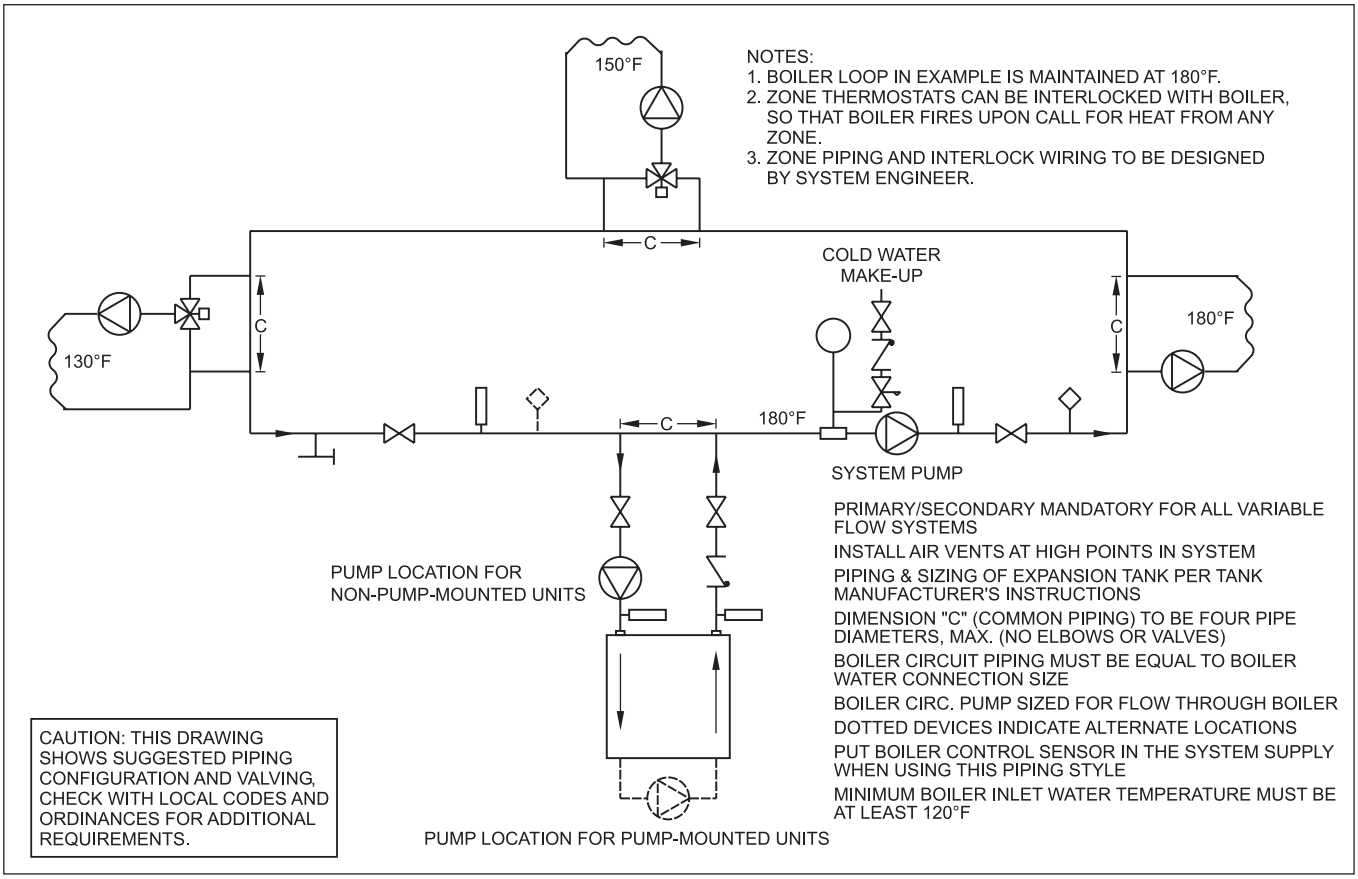

Figure 8. Hydronic Piping — One Boiler, Multi-Temperature System.

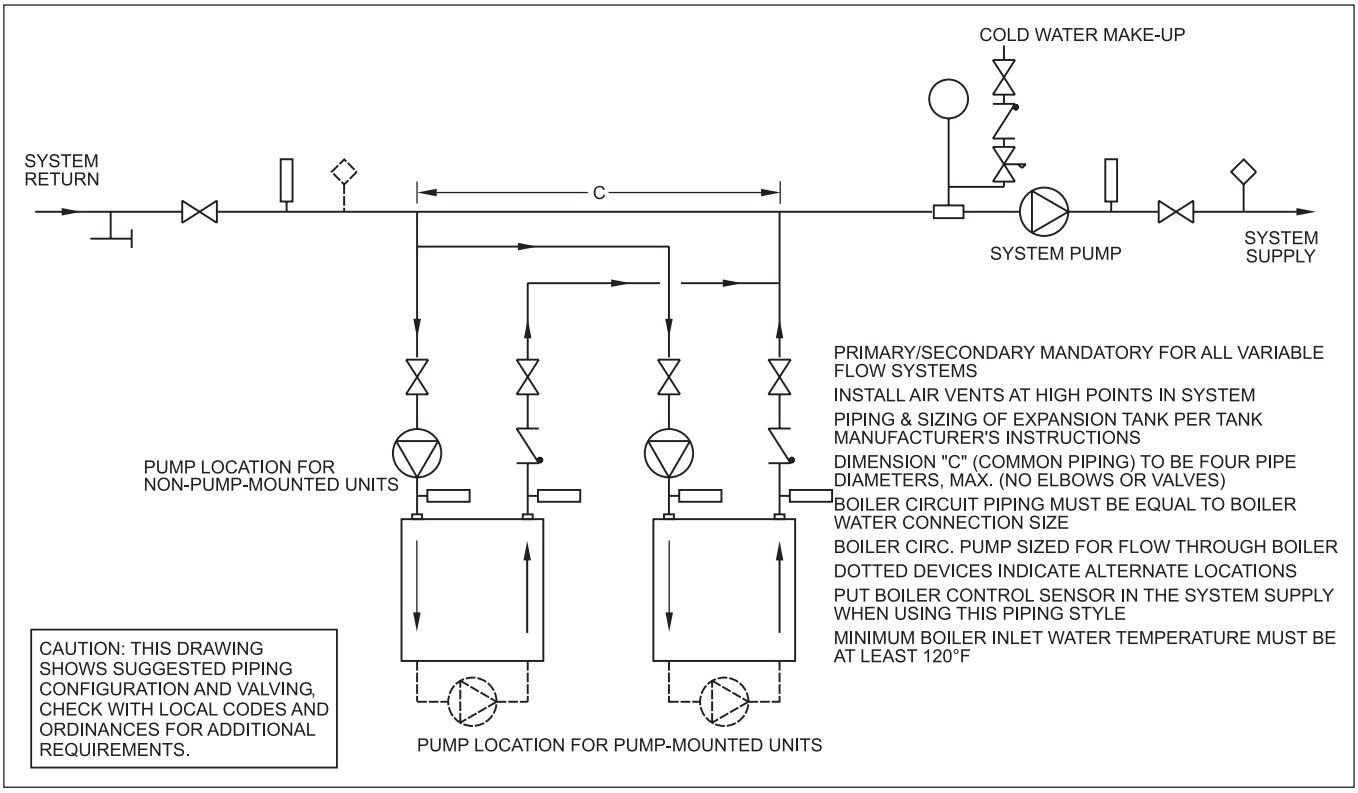

Figure 9. Hydronic Piping - Primary-Secondary, Reverse-Return.

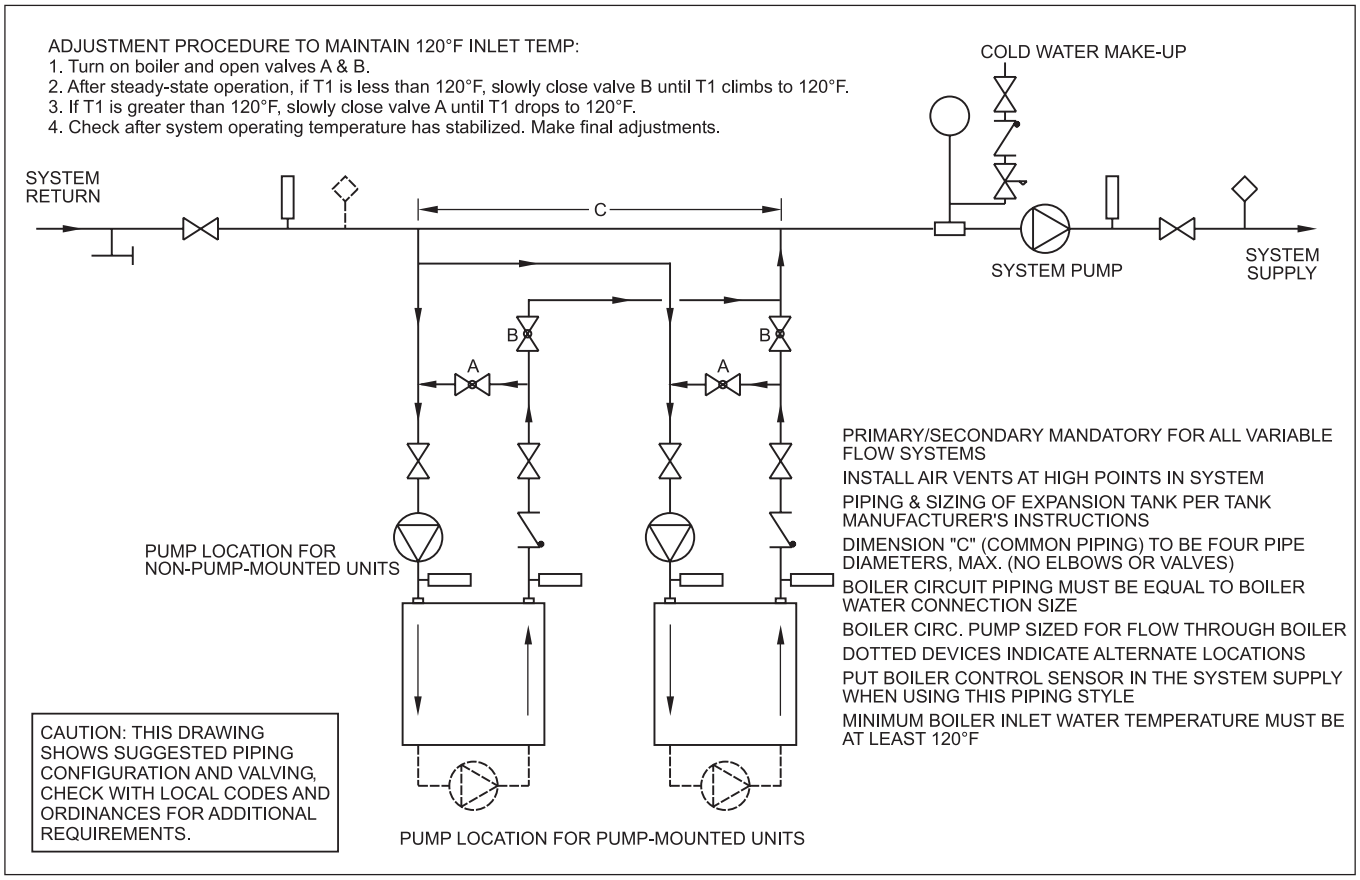

Figure 10. Hydronic Piping - Primary-Secondary, Reverse-Return, Low Temperature.

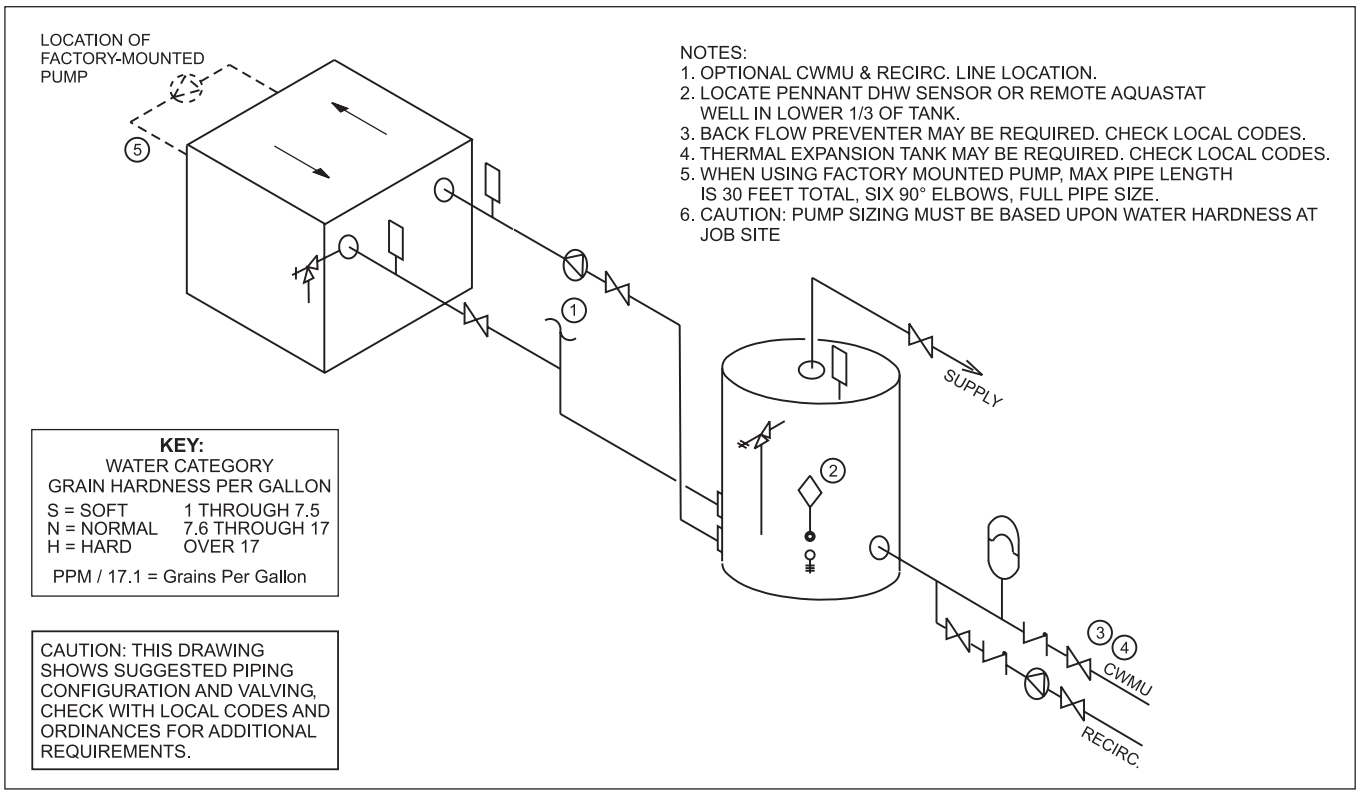

Figure 11. Water Heater Piping — One Heater, One Tank.

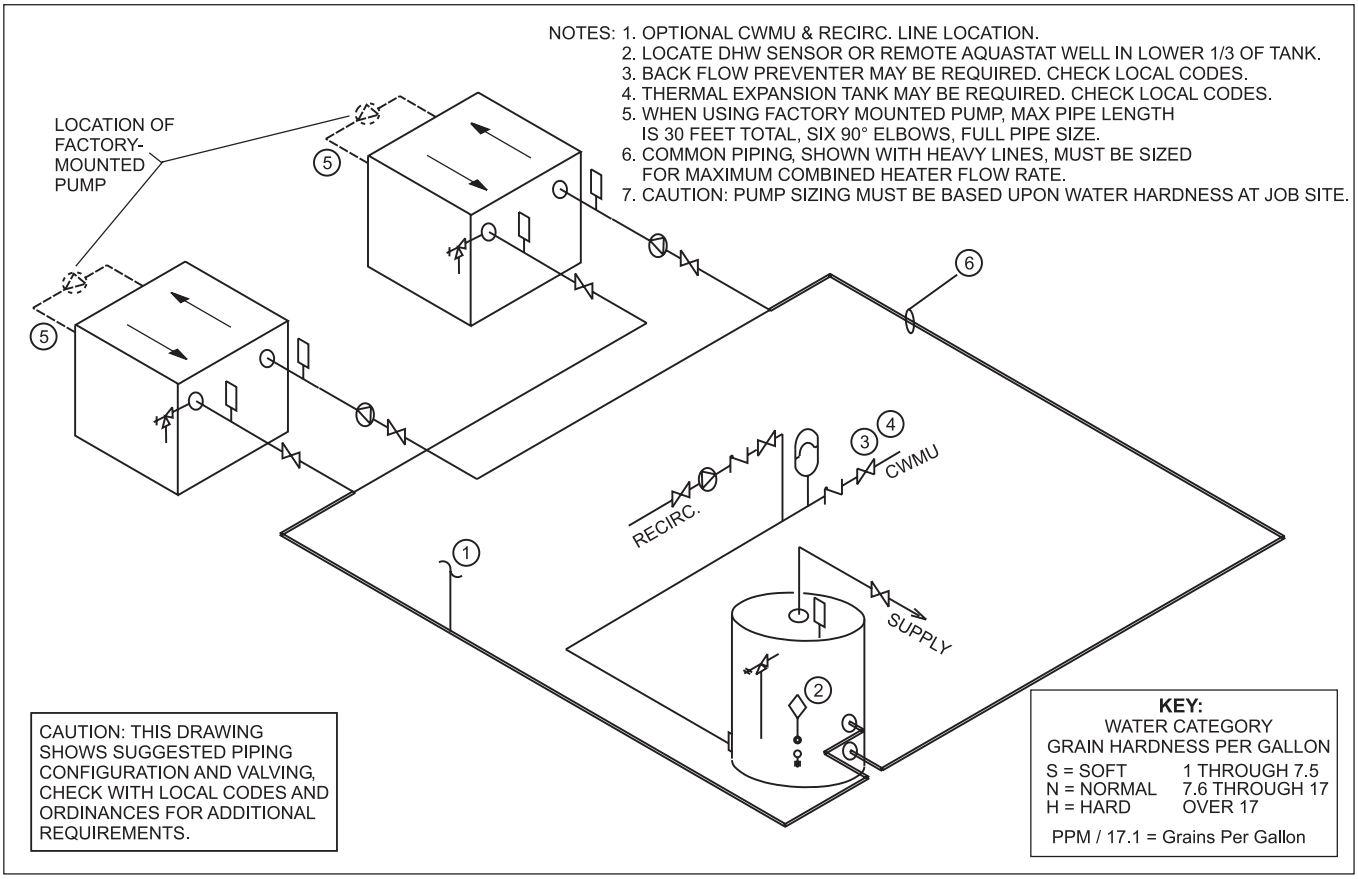

Figure 12. Water Heater Piping — Multiple Heaters, One Tank.

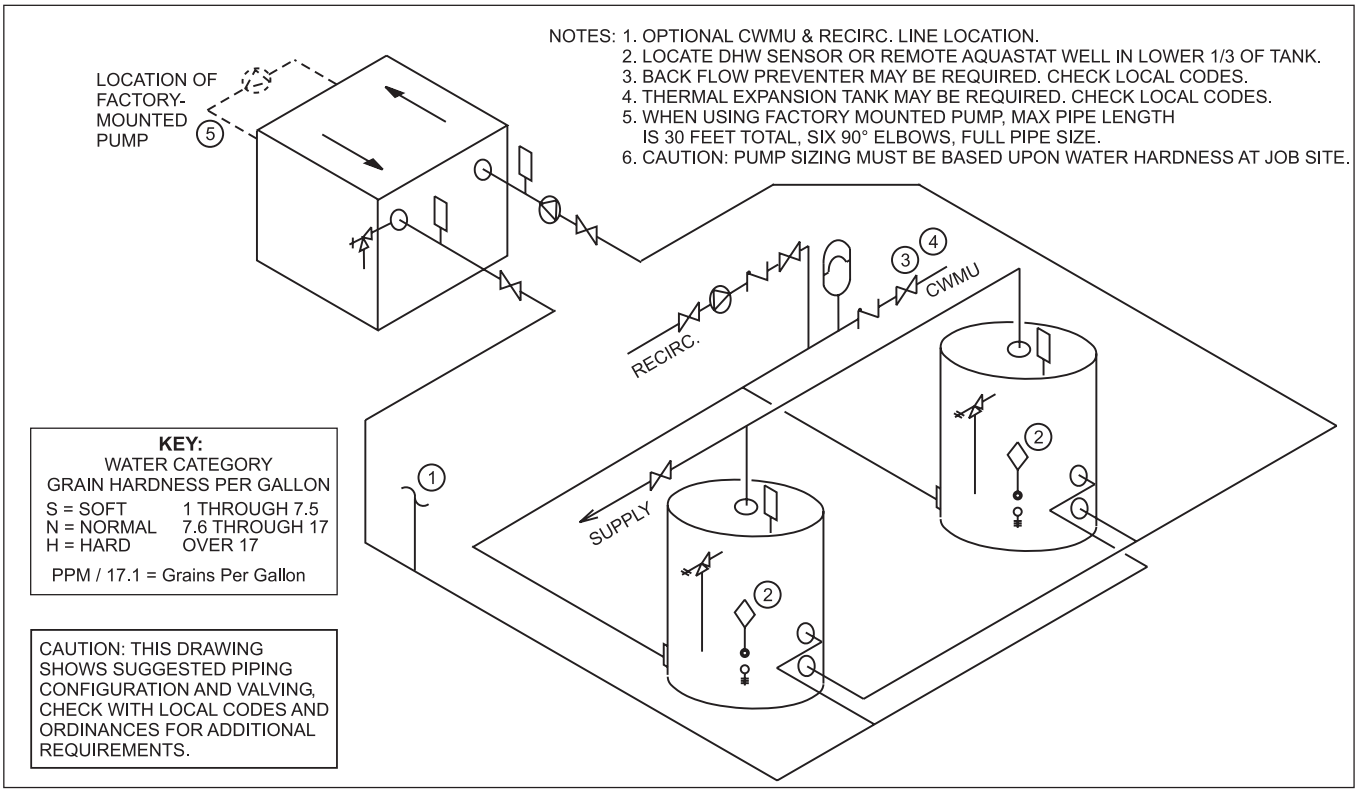

Figure 13. Water Heater Piping — One Heater, Multiple Tanks.

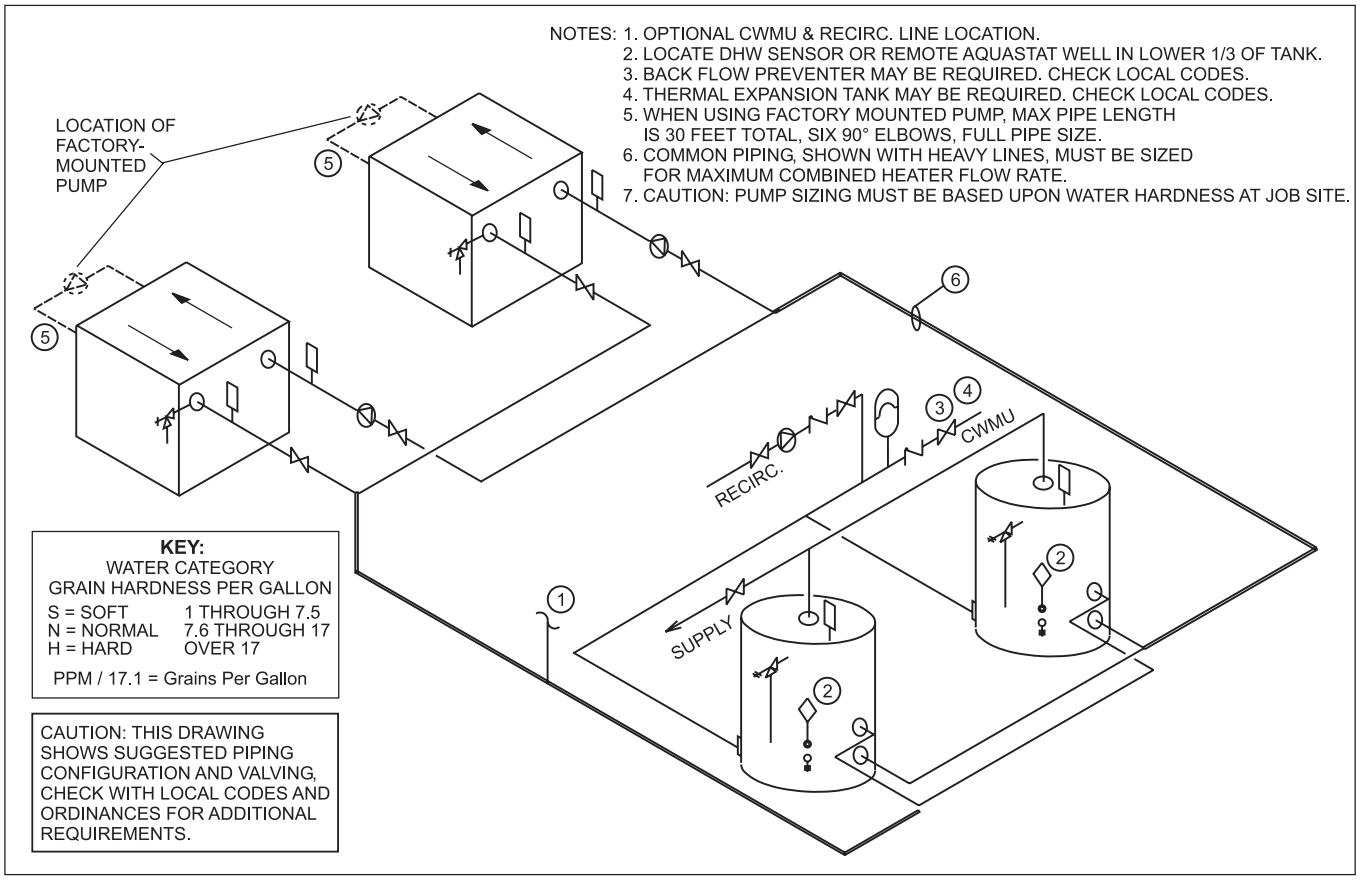

Figure 14. Water Heater Piping — Multiple Heaters, Multiple Tanks.

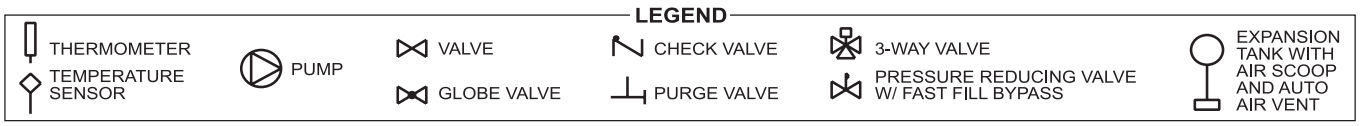

Unit	gpm			ft			Temp Rise °F			*lpm*			*m*			*Temp Rise °C*		
Size	S	N	H	S	N	H	S	N	H	*S*	*N*	*H*	*S*	*N*	*H*	*S*	*N*	*H*
500	45	68	90	1.8	2.3	3.5	19	13	9	*170*	*257*	*341*	*0.5*	*0.7*	*1.1*	*10*	*7*	*5*
750	45	68	90	2.1	3.0	6.0	28	19	14	*170*	*257*	*341*	*0.6*	*0.9*	*1.8*	*16*	*10*	*8*
1000	45	68	90	2.3	3.6	6.1	38	25	19	*170*	*257*	*341*	*0.6*	*1.1*	*1.9*	*21*	*14*	*10*
1250	68	68	90	3.8	3.8	6.3	31	31	24	*257*	*257*	*341*	*1.2*	*1.2*	*1.9*	*17*	*17*	*13*
1500	68	68	90	3.9	3.9	6.5	38	38	28	*257*	*257*	*341*	*1.2*	*1.2*	*2.0*	*21*	*21*	*16*
1750	68	68	90	4.0	4.0	6.7	44	44	33	*257*	*257*	*341*	*1.2*	*1.2*	*2.0*	*24*	*24*	*18*
2000	112	112	112	10.0	10.0	10.0	30	30	30	*424*	*424*	*424*	*3.0*	*3.0*	*3.0*	*17*	*17*	*17*

NOTES: S = soft water (1 to 7.5 grains hardness).
N = normal water (7.6 to 17 grains hardness).
H = hard water (more than 17 grains hardness).
gpm = gallons per minute; lpm = liters per minute; ft = headloss in feet; m = headloss in meters.
Headloss is for heater's heat exchanger only.

Table 9. Water Flow Requirements — BMT2V.

⚠ WARNING

The appliance must be electrically grounded in accordance with the requirements of the authority having jurisdiction or, in the absence of such requirements, with the latest edition of the National Electrical Code, ANSI/NFPA 70, in the U.S. and with latest edition of CSA C22.1 Canadian Electrical Code, Part 1, in Canada. Do not rely on the gas or water piping to ground the metal parts of the boiler. Plastic pipe or dielectric unions may isolate the boiler electrically. Service and maintenance personnel, who work on or around the boiler, may be standing on wet floors and could be electrocuted by an ungrounded boiler.

Single pole switches, including those of safety controls and protective devices must not be wired in a grounded line.

All electrical connections are made in the field wiring terminal strip, which is located at the right side of the appliance.

NOTE: All internal electrical components have been pre-wired. No attempt should be made to connect electrical wires to any other location except the wiring box.

5.1 Main Power

All Brute Deluxe non-pump-mounted heaters require a single 120-volt fused supply. See Figure 15 for over current protection ratings.

Pump-mounted Brute Deluxe models 500 to 1500 use a single 120-volt fused supply. The installer can change these units to use a separate circuit for the pump, if desired. Instructions to make this change are found in Section 5.1.1.

Pump-mounted Brute Deluxe models 1750 and 2000 require two 120-volt fused supplies. See Figure 15 for over current protection ratings.

SIZE	SINGLE CIRCUIT CONN. HEATER		PUMP ONLY	PUMP ONLY
	W/O PUMP	W / PUMP	TACO	B&G
500	15	20	15	15
750	15	20	15	15
1000	20	(TACO) 25 / 30 (B&G)	15	15
1250	25	30	15	15
1500	25	30	15	15
1750	25	—	15	20
2000	25	—	20	20

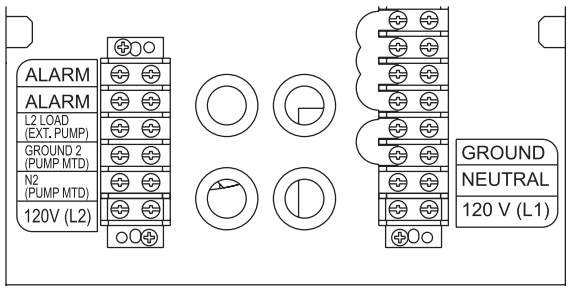

Figure 15. Field Wiring.

5.1.1 Changing Single Circuit to Two Circuits

Sizes 500 to 1500 will be shipped from the factory for a single 120-volt power supply. To use a separate circuit for the pump:

1. Ensure power is disabled to the unit.
2. Remove the three jumper wires that connect the L2, N2 and GROUND wires on terminal block 1 to the main distribution terminal block. These wires will be black/white, white and green respectively.

5.2 Field Wiring

Main Power: The main field wiring connection points are located inside the line voltage connection/

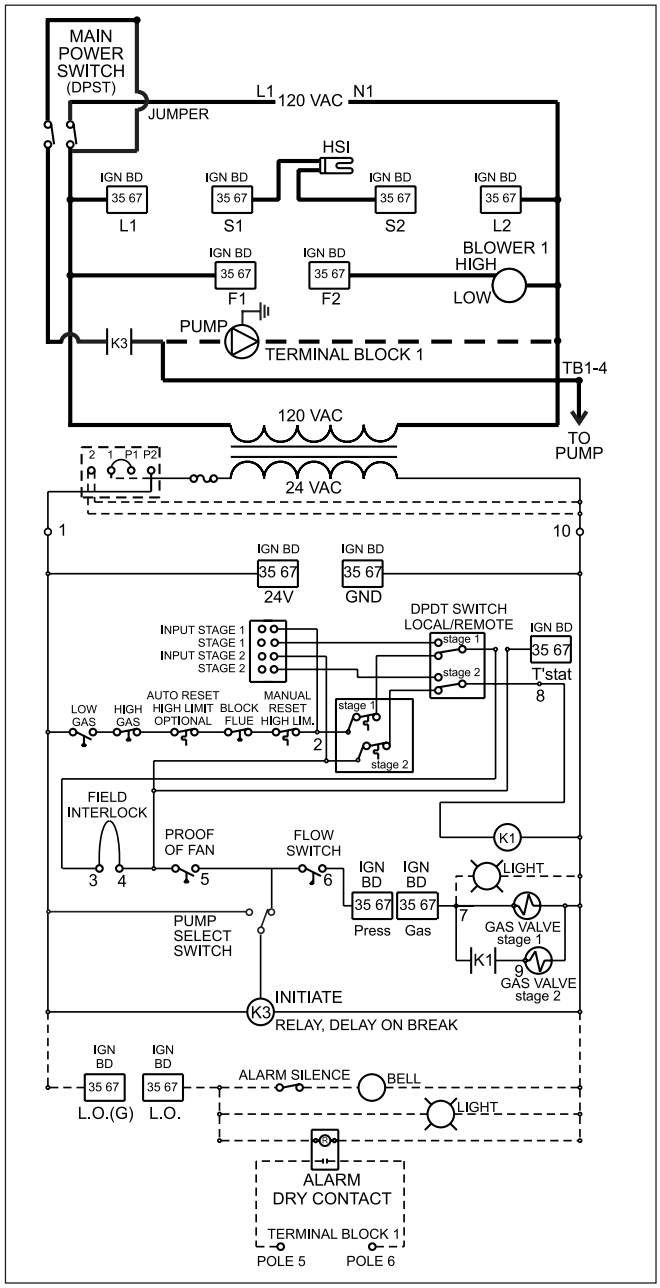

Figure 16. Brute Deluxe (500–750) Wiring Diagram.

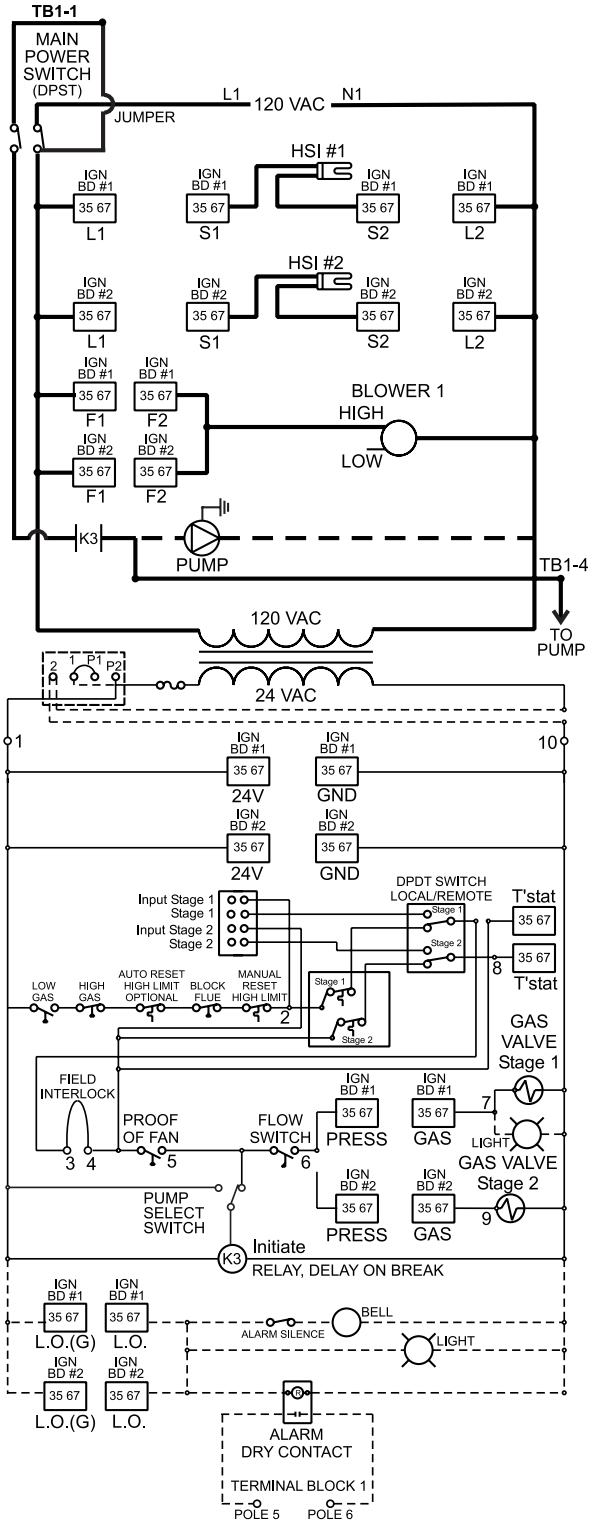

Figure 17. Brute Deluxe (1000) Wiring Diagram.

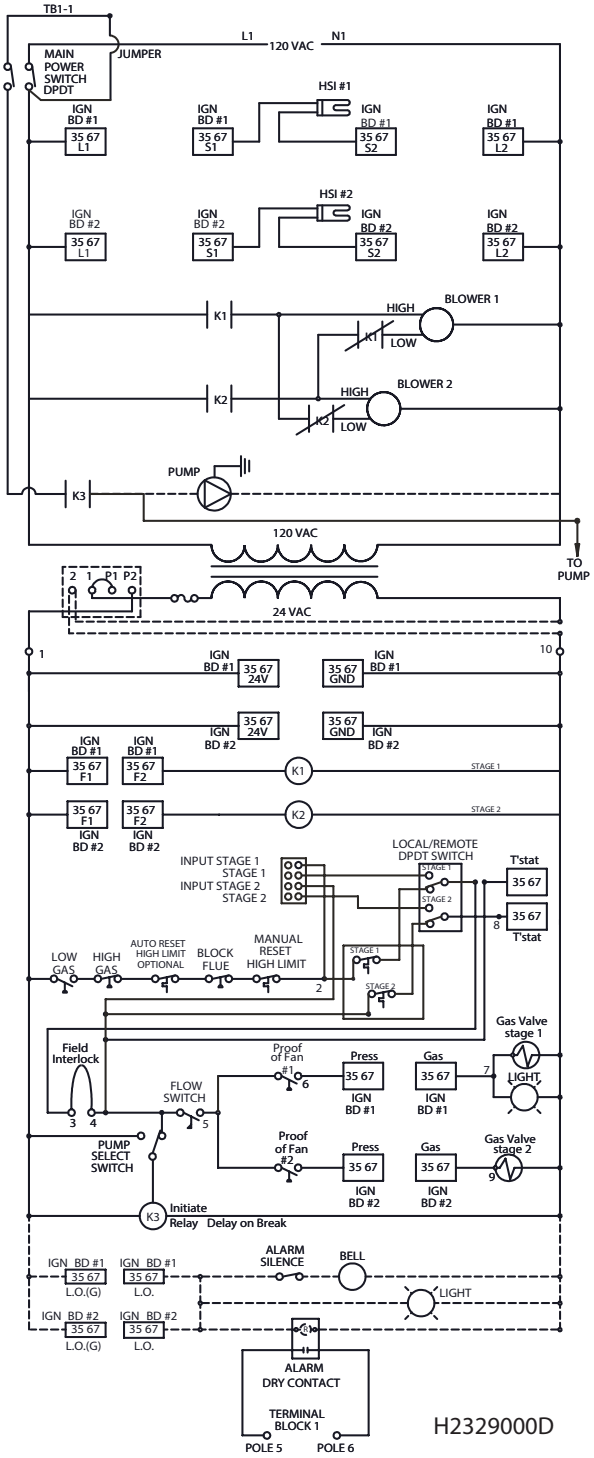

Figure 18. Brute Deluxe (1250–2000) Wiring Diagram.

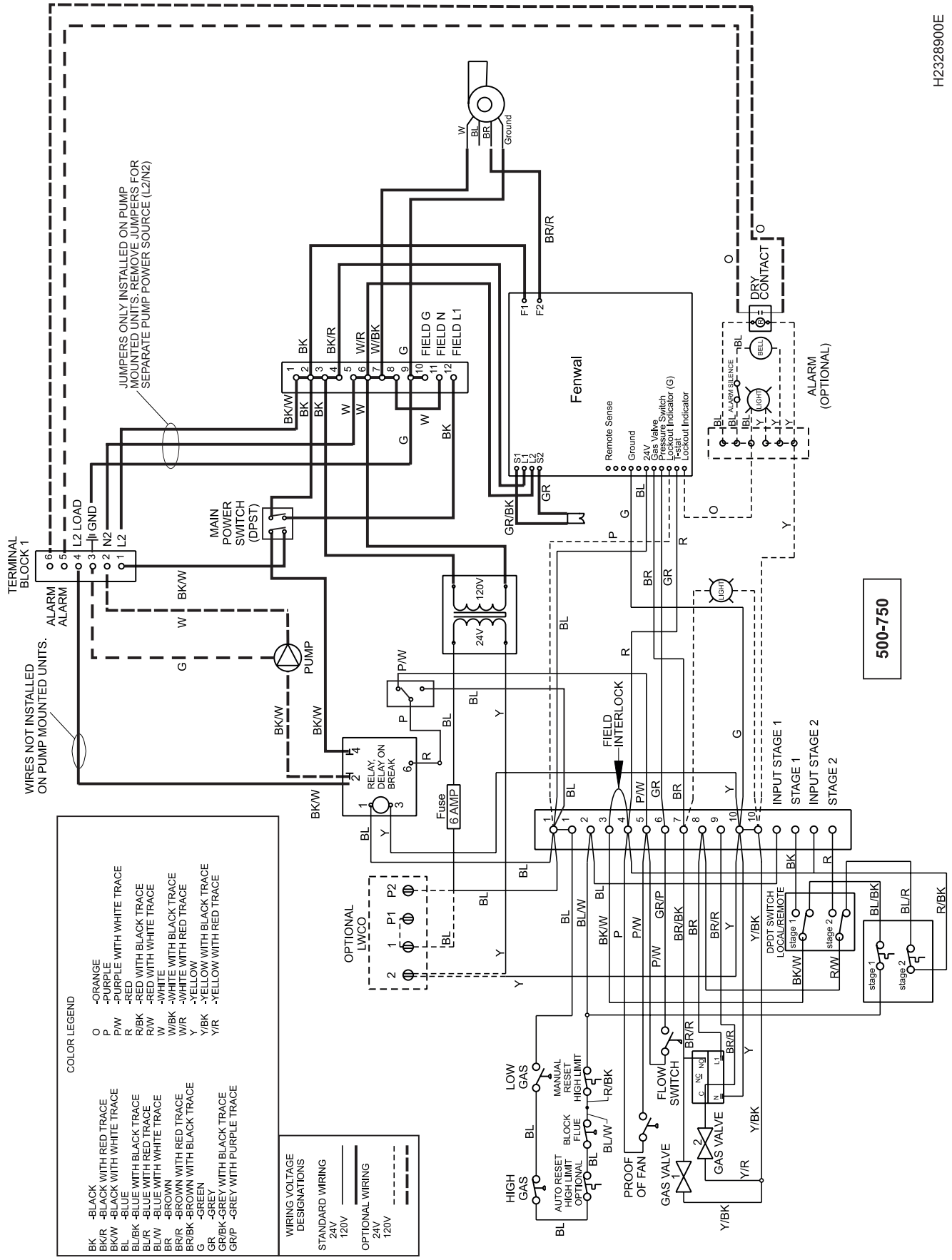

Figure 19. Brute Deluxe (500–750) Connection Diagram.

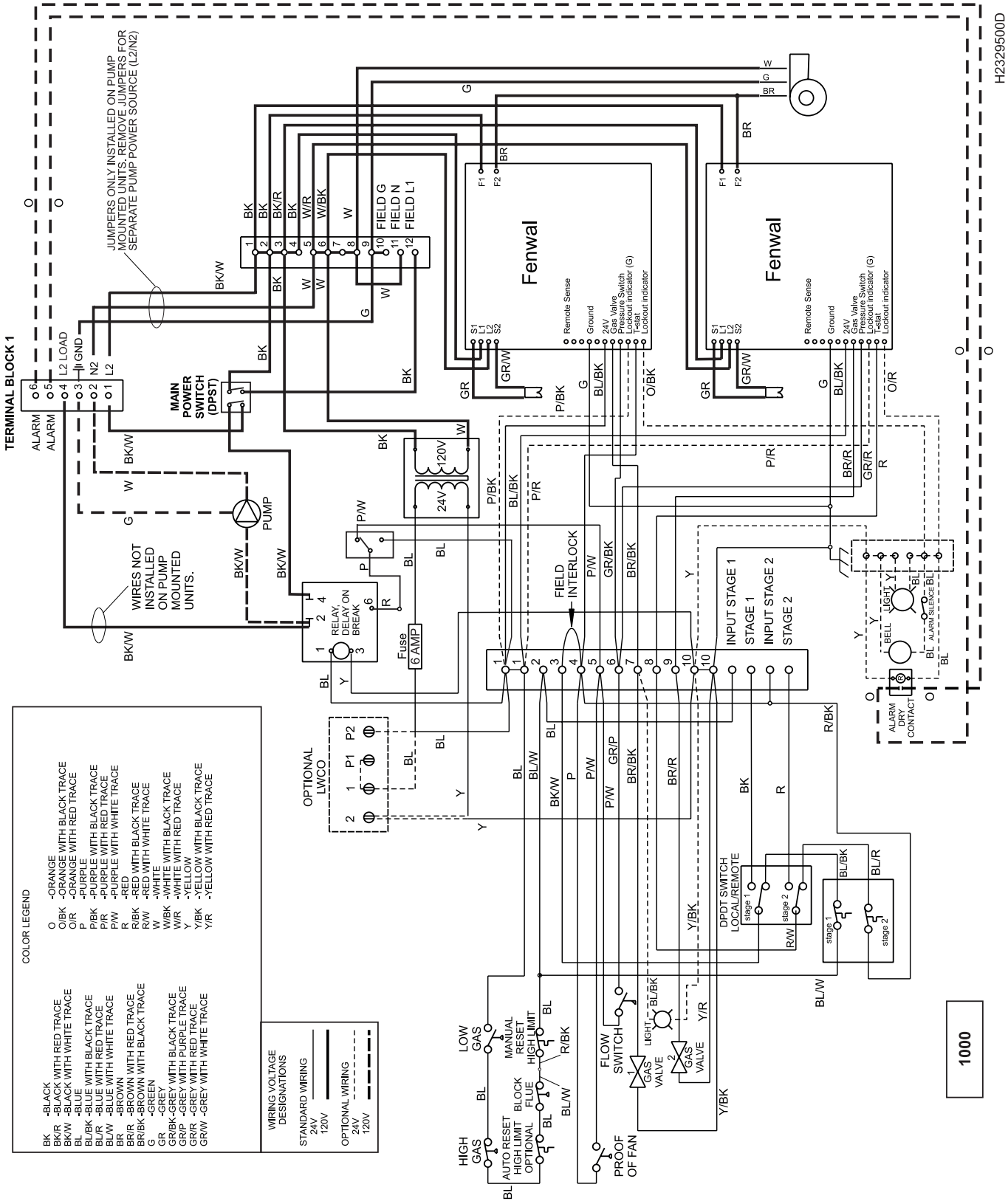

Figure 20. Brute Deluxe (1000) Connection Diagram.

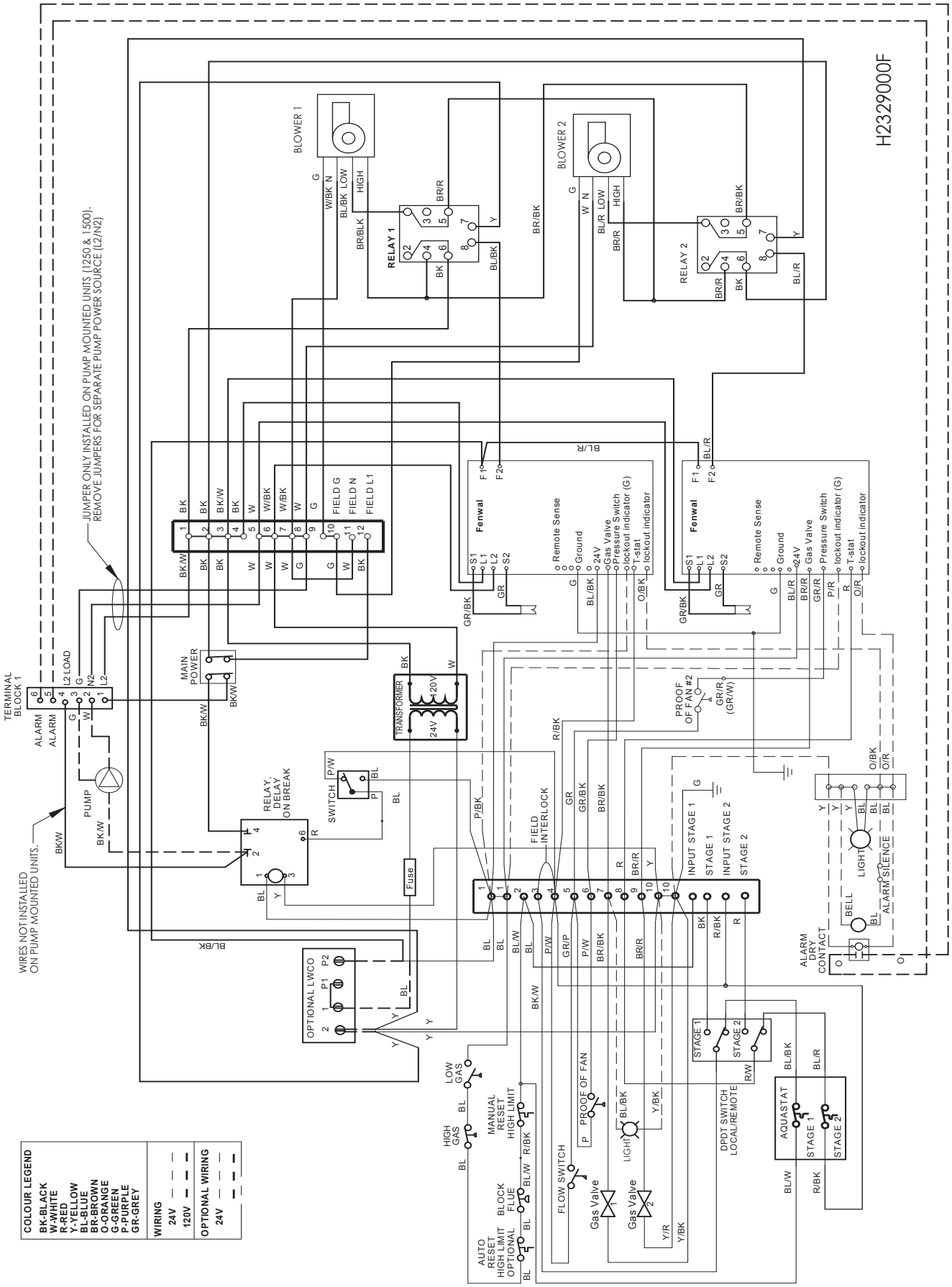

Figure 21. Brute Deluxe (1250–2000) Connection Diagram.

field wire area. Single circuit 120-volt units will be field connected at the main terminal block labeled "120V (L1)", "NEUTRAL" and "GROUND". See Figure 15 for over current protection ratings.

Sizes 1750, 2000 (and those which have been field retrofitted to electrically separate the pump and heater) require two 120-volt circuits. The heater circuit is found on the main terminal block and denoted as "120V (L1)", "NEUTRAL" and "GROUND". The pump circuit is located on terminal block 1 and is denoted as "120V (L2)", "N2 (PUMP MTD)", "GROUND 2 (PUMP MTD)". See Figure 15 for over current protection ratings.

External Pumps: All non-pump-mounted BMT2 units have an internal (dry) contact rated for 20Amps. A field-supplied pump can be connected directly to this contact if it does not draw more than 20 Amps. If more current is required, a separate pump contactor must be installed.

To utilize this internal pump contact, supply 120 volt single-phase power to the terminal marked “120V (L2)” and supply the pump using the terminal marked “L2 LOAD (EXT. PUMP)”.

NOTE: This pump control is equipped with a delay on break typically set for 3 minutes, but can be adjusted between 0.1 and 10 minutes.

Field Interlocks: To install other field-wired devices to interlock with the boiler (tank stats, louver switches, flow switches, etc.), remove the jumper between terminals 3 and 4 and wire the device in series across these terminals. These terminals are located in the upper main control panel.

External Control Wiring: These terminals are located in the upper main control panel.

Optional Alarm Contacts: As an option, the Brute Deluxe is available with an alarm kit. This alarm kit contains a dry contact for up to 120V which is available within the 120V field wiring panel. These terminals will be clearly labeled "Alarm" and are rated up to 10 amps.

5.3 External Staging Control Wiring

⚠ WARNING

Improper field wiring may result in fire or explosion which can cause property damage, severe injury, or death. Make only wiring connections which are in accordance with the Installation and Operation manual.

⚠ AVERTISSEMENT

Un câblage incorrect lors de l’installation peut causer un incendie ou une explosion pouvant entraîner des dommages matériels, de graves blessures ou la mort. Ne faire seulement que les connexions conformes au Manuel d’installation et d’exploitation.

If controlling the stages of the BMT2 from an external source (multiple boiler control, BAS, etc.), wire Stage 1 to the terminals marked "Input Stage 1" and "Stage 1", and wire Stage 2 to the terminals marked "Input Stage 2" and "Stage 2". The "Local/Remote" selector switch above the terminal strip must be placed in the "Remote" position for the external controller to manage the staging.

If it is intended to use the BMT2's on-board 2-stage controller, no extra wiring is necessary. Ensure the Local/Remote selector switch is in the "Local" position.

SECTION 6. Operating Instructions

6.1 Sequence of Operation

Upon initiation of the main power switch, 120V will be sent to multiple items. Among these are the open contact fan relays, open contact ignitor relay, open contact pump relay, ignition control module(s) and open contact lock out indicators (the optional alarm package uses this). In addition to these, 24V will travel through the optional gas pressure switches and optional auto reset high limit and boiler control relays. The 24V will then travel through the block flue switch and the manual reset high limit to the temperature controller.

Upon a call for heat from the BMT2’s internal control or an external staging control, 24V travels through the field interlock (if closed) and then to the ignition control(s) “T-stat” terminal (500-750 models are equipped with one ignition control and models 1000-2000 are equipped with two ignition controls).

When “T-stat” on an ignition control is energized, its fan will energize and the ignition control will seek signal from the “pressure circuit”. The pressure circuits consist of the flow switch and proof of fan.

Models 500-1,000 calls for fan, fan prove, initiate pump then prove flow, after which “pressure circuit” has been satisfied.

Models 1250-2000 calls for pump, proof of flow, initiate fan then prove fan, after which “pressure circuit” has been satisfied. The fan prove will only occur for the active stage that has been called.

When pressure circuit has been satisfied, proving combustion air and adequate water flow, the hot surface igniter will initiate. The ignition control checks that the igniter current reached a predetermined level then will dwell momentarily. When dwell time is complete the gas valve will open.

After a 4-second trial for ignition, the igniter switches off. Unless a flame is detected by the flame sensor (a minimum value of 0.4µA), the gas valve will close and The ignition module will either attempt ignition again (up to three times) or will lock out if the optional lockout ignition module is used.

If flame is sensed, the burner will continue to fire as long as there is a call for heat and adequate flame signal.

If there is a subsequent loss of flame signal, the burner will attempt re-ignition up to three times (only once if optional lockout ignition is used.) When the call for heat is satisfied, the gas valves(s) close and the blowers continues to run for 30 seconds.

The pump will continue to run for 0.1 to 10 minutes, depending on what the pump time delay has been set to. Brute Deluxe sizes 1,000-2,000 have two ignition controls that control the individual stages. If one ignition control should fail for any reason, the remaining module can operate its burners independently. *(Note that if a single blower is disabled on units 1250-2000, the other fan will continue to operate and safely allow the boiler to run with a single stage.)*

6.2 Filling the System

1. Ensure the system is fully connected. Close all bleeding devices and open make-up water valve. Allow system to fill slowly.
2. If make-up water pump is employed, adjust pressure switch on pumping system to provide a minimum of 12 psi (81.8 kPa) at the highest point in the heating loop.
3. If a water pressure regulator is provided on the make-up water line, adjust the pressure regulator to provide at least 12 psi (81.8 kPa) at the highest point in the heating loop.
4. Open bleeding devices on all radiation units at the high points in the piping throughout the system, unless automatic air bleeders are provided at such points.
5. Run system circulating pump for a minimum of 30 minutes with the boiler shut off.
6. Open all strainers in the circulating system, check flow switch operation, and check for debris. If debris is present, clean out to ensure proper circulation.
7. Recheck all air bleeders as described in Step 4.
8. Check liquid level in expansion tank. With the system full of water and under normal operating pressure, the level of water in the expansion tank should not exceed ¼ of the total, with the balance filled with air.
9. Start up system according to the procedure in this manual. Operate the entire system, including the pump, boiler, and radiation units for one (1) hour.
10. Recheck the water level in the expansion tank. If the water level exceeds ¼ of the volume of the expansion tank, open the tank drain, and drain to that level.
11. Shut down the entire system and vent all radiation units and high points in the system piping, as described in Step 4.
12. Close make-up water valve and check strainer in pressure reducing valve for sediment or debris from the make-up water line. Reopen make-up water valve.
13. Check gauge for correct water pressure and also check water level in the system. If the height indicated above the boiler insures that water is at the highest point in the circulating loop, then the system is ready for operation.
14. Refer to local codes and the make-up water valve manufacturer's instructions as to whether the make-up water valve should be left open or closed.
15. After placing the unit in operation, the ignition system safety shutoff device must be tested. First, shut off the manual gas valve, and call the unit for heat. After the pre-purge and ignitor heat-up time, the main gas terminals will be energized, attempting to light, for four (4) seconds, and then will de-energize. The unit will go into lockout mode. Second, turn the power off and then on again, open the manual gas valve and allow the unit to light. While the unit is operating, close the manual gas valve and ensure that power to the main gas valve has been cut.
16. Within three (3) days of start-up, recheck all air bleeders and the expansion tank as described in Steps 4 and 8 above.

Important: The installer is responsible for identifying to the owner/operator the location of all emergency shutoff devices.

⚠ WARNING

Do not use this appliance if any part has been under water. Immediately call a qualified service technician to inspect the appliance

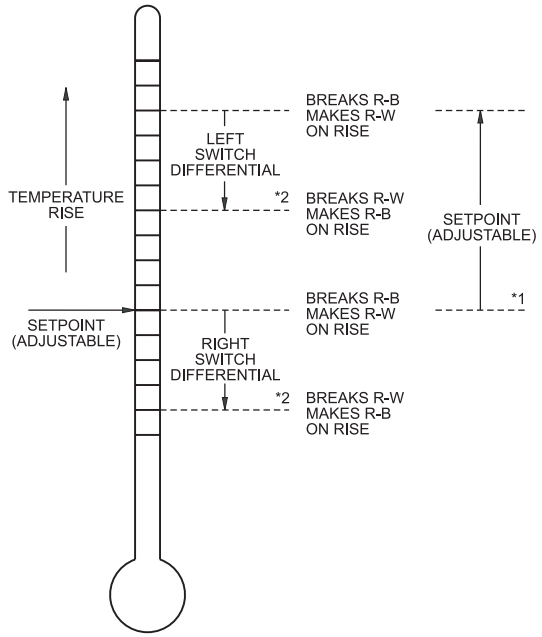

*1 Difference between the temperatures at which the two switches make R-W. Adjustable from 3°F to 10°F (1.7°C to 5.6°C) on standard models, or from 3.6°F to 12°F (2.0°C to 6.7°C); 55°F to 175°F (13°C to 79°C) models.

*2 Two DPDT switches operate in sequence. Each switch differential is fixed at approximately 3°F (1.7°C) on standard models, or 3.6°F (2.0°C); 55°F to 175°F (13°C to 79°C) models.

Figure 22. Honeywell L8008G.

and to replace any part of the control system and any gas control that may have been under water.

6.3 Operating Temperature Control

All Brute Deluxe's are equipped with a two-stage aquastat. To utilize this mounted controller be sure to have the "Local/Remote" selector switch to "Local". Set the controller to the desired operating set point. The controller has an interstage differential that can be adjusted from 3°F to 10°F. This allows the user to have some control over how stage 2 and stage 1 call for heat (see Figure 22).

Because the Brute Deluxe controller senses inlet water and the manual reset high limit senses outlet water, the high limit should be set 40-50°F higher than the controller, to avoid nuisance lockout of the manual reset high limit.

6.4 External Boiler Operations

If controlling the stages of the BMT2 from an external source (multiple boiler control, BAS, etc) the "Local/Remote" selector switch above the terminal strip must be placed in the "Remote" position. In this mode, the controller that is mounted on the BMT2 will no longer have control of the unit. The 24V from the unit waits at the input terminal, and the external control switches this 24V from the input terminal to the stage terminal.

6.5 Limit Controls

The manual reset high limit control is provided as standard equipment on all heaters. An additional automatic reset switch is optional.A high limit temperature-sensing bulb is always located in the heater outlet. Burners will automatically shut down whenever overheating occurs.

6.6 Operating the Burner and Set Up

6.6.1 Set Up for 0 to 2500 Feet Altitude

The Brute Deluxe appliance utilizes a modular design to achieve its stage-firing. The setup must be checked before the unit is put in operation. Problems such as failure to start, rough ignition, strong exhaust odors, etc. can be due to improper setup. Damage to the Brute Deluxe resulting from improper setup is not covered by the limited warranty.

1. Using this manual, make sure the installation is complete and fully in compliance with the instructions.
2. Determine that the appliance and system are filled with water and all air has been bled from both. Open all valves.
3. Observe all warnings on the Operating Instructions label and turn on gas and electrical power to appliance.
4. Switch on the appliance power switch located on the right side of the unit.
5. The Brute Deluxe will enter the start sequence, as long as the unit is being called for heat. The blower and pump come on for pre-purge, then the ignitor warm-up sequence starts and after the ignitor warm-up is complete and all safety devices are verified, the gas valves open. If ignition doesn't occur, check that there is proper gas supply. Wait 5 minutes and start the unit again. During initial start up, air in the gas line may cause the Brute Deluxe to "lock out" during the first few trials for ignition. Depending on the ignition modules installed, the manual reset button on the ignition modules may need to be depressed to restart the Brute Deluxe.
6. When the unit is running, the supply gas pressure must be checked. Inlet gas pressure must not exceed 13" W.C. (3.2kPa). The minimum inlet gas pressure is 5" W.C. (1.2kPa).
7. Once the inlet gas pressure is verified, the outlet gas pressure from each valve (manifold gas pressure) must be checked, and adjusted, if necessary. The manifold gas pressure must be 2.5" W.C. (0.62kPa).
8. Complete the setup by checking the CO_2 at the outlet of the unit. The CO_2 should be 8% for natural gas, or 9.2% for propane.
9. **After placing the appliance in operation, the Burner Safety Shutoff Device must be tested**.
   (a) Close gas shutoff valve with burner operating.
   (b) The flame will go out and blower will continue to run for the post purge cycle. One additional attempt to light will follow. Ignition will not occur as the gas is off. The ignition control will lockout, and will have to be reset before the unit will operate.
   (c) Open gas shutoff valve. Restart the appliance. The ignition sequence will start again and the burner will start. The appliance will return to its previous mode of operation.

NOTE: Unit sizes 1000–2000 have two ignition controls and two ignitors, which work independently of one another. If the ignition control for stage 1 fails to properly light the main burners for that stage, the second ignition control will still be active, and will be able to energize stage 2. This, of course, will only occur upon call for stage 2 and if all other safety devices confirm that the unit will run in a safe condition.

6.6.2 High Altitude Adjustment and Set Up

Brute Deluxe appliances may be operated at high altitude (7700 ft., 2347 m) with a reduction in output of approximately 10%. At altitudes of less than or more than 7700 ft. (2347 m) the appliance will perform equally as well, but with differing reductions in output. At elevations higher than 7700 ft. (2347 m) the reduction in output will exceed 10% and at elevations below 7700 ft. (2347 m) it will be less than 10%. High altitude adjustment must not be made on appliances operating at elevations below 2500 ft. (762 m).

No orifice changes are required to adjust the Brute

Deluxe appliances for high altitude. High altitude adjustment is accomplished by adjustment of the gas valve manifold pressure and the air shutter(s). The required instruments used to assist in these adjustments are a CO_2 or O_2 Analyzer and a U-Tube Manometer or other device capable of reading a pressure of 2.5-3.0 inches W.C. (0.62-0.75 kPa).

Start the adjustment process by checking the CO_2 in the "as installed" condition. Adjust the air shutter(s) so that the CO_2 is about 8% or the O_2 is about 6.8% for appliances operating on Natural Gas. For appliances operating on LP Gas adjust the air shutter(s) so that the CO_2 is about 9.2% or the O_2 is about 6.8%. Appliances with two blowers should be adjusted so that the air shutters below each blower are open the same amount.

Once the CO_2 or O_2 has been set, the manifold pressure may be adjusted. Remove the 1/8 NPT plug from the lower side of the gas valve that is to be set and install a fitting, hose and manometer. Start the appliance and observe the manifold pressure. Manifold pressure must be adjusted to 3.0 in. W.C. (0.75 kPa) (for high altitude only, standard operating pressure is 2.5 in. W.C. (0.62 kPa)). It is adjusted by removing the slotted cap on the gas valve and turning the adjustment screw (beneath the cap) clockwise to increase pressure and replaced after the adjustments have been completed and the fitting, hose and manometer have been removed and the 1/8" plug has been replaced. Repeat this process until all gas valves have been set. **Note:** The pressure can be set only when the appliance is operating and only when the particular gas valve being adjusted is energized by a call for heat from the staging control.

After all of the gas valve manifold pressures have been set, the CO_2 or O_2 must be reset. CO_2 or O_2 will have changed when the manifold pressure was adjusted. Open the air shutter(s) to reduce the CO_2 or O_2 to the values achieved previously.

The procedure is complete when all gas valves are adjusted to a manifold pressure of 3.0 in. W.C. (0.75 kPa) and the CO_2 is adjusted to 8.0% for Natural Gas appliances or 9.2% for LP appliances (to be checked only at full fire). When using an O_2 analyzer, the correct O_2 is 6.8% for both Natural Gas and LP appliances.

⚠ Caution

Should any odor of gas be detected, or if the gas burner does not appear to be functioning in a normal manner, close main shutoff valve, do not shut off switch, and contact your heating contractor, gas company, or factory representative.

6.7 Shutting Down the Brute Deluxe

1. Switch off the main electrical disconnect switch.
2. Close all manual gas valves.
3. If freezing is anticipated, drain the Brute Deluxe and be sure to also protect building piping from freezing.
   This step to be performed by a qualified service person.

6.8 To Restart the Brute Deluxe

If drained, follow Section 6.2 in this manual for proper filling and purging.

1. Switch off the main electrical disconnect switch.
2. Close all manual gas valves.
3. **WAIT FIVE (5) MINUTES.**
4. Set the aquastat or thermostat to its lowest setting.
5. Open all manual gas valves.
6. Reset all safety switches (pressure switch, manual reset high limit, etc.).
7. Set the temperature controller to the desired temperature setting and switch on electrical power.
8. Burner will go through a prepurge period and ignitor warm-up period, followed by ignition.

SECTION 7. Maintenance

7.1 System Maintenance

1. Lubricate the system water-circulating pump, if required, per the instructions on the pump.
2. If a strainer is employed in a pressure reducing valve or the piping, clean it every six months.
3. Inspect the venting system for obstruction or leakage at least once a year. Periodically clean the screens in the vent terminal and combustion air terminal (when used).
4. Keep the appliance area clear and free from combustible materials, gasoline, and other flammable vapors and liquids.
5. If the appliance is not going to be used for extended periods in locations where freezing normally occurs, it should be isolated from the system and completely drained of all water. All systems connected to it should also be drained or protected from freezing.
6. Low water cutoffs, if installed, should be checked every 6 months. Float type low water cutoff should be flushed periodically.
7. Inspect flue passages, and clean with brushes/ vacuums, if necessary. Sooting in flue passages indicates improper combustion. Determine the cause and correct.
8. Inspect the vent system and air intake system, and if the vent system is Category III, ensure that all joints are sealed properly. If joints need to be resealed, completely remove existing sealing material, and clean with alcohol. Apply new sealing material, and re-assemble.

7.2 Appliance Maintenance and Component Description

Only genuine Bradford White replacement parts should be used.

⚠ Caution
Label all wires prior to disconnection when servicing controls. Wiring errors can cause improper and dan-gerous operation. Verify proper operation after servicing.

See Figure 5 for location of gas train components.

The gas and electric controls on the appliance are engineered for long life and dependable operation, but the safety of the equipment depends on their proper functioning. It is strongly recommended that a qualified service technician inspect the basic items listed below every year.

a. Ignition controls
b. Ignitors
c. Water temperature control
d. Automatic gas valve
e. Pressure switches
f. Blowers

7.2.1 Burners

Close main manual gas valve before proceeding. Checking the burners for debris - Remove the ignitor inspection panels(s) and ignitor(s) and inspect the burners through the ignitor hole(s) using a flashlight to illuminate. If there is any indication of debris on the burners that are visible, all the burners will need to be inspected more thoroughly. Remove the screws from around the front of the air box (large panel from which the ignitor inspection panel(s) were removed), and remove the large panel. Remove the gas manifold assemblies and the burner panels. Inspect the burners. Clean burners, if necessary, by blowing compressed air from the outside of the burners into the center of the burner. A dirty burner may be an indication of improper combustion or dirty combustion air. Determine the cause, and correct. Replace the burners in the reverse order

7.2.2 Filter

The filter used in the Brute Deluxe is washable with an 83% arrestance. Since the filter is washable, it will only need replacement when unwashable, deteriorated or damaged. If filter replacement is needed, it should only be replaced with a factory part. Inspect the air filter. If there is debris on the air filter, remove it from the filter box, and wash it with mild soap and water. Ensure that the filter is completely dry before re-installing, in reverse order.

7.2.3 Gas Valves

The gas valves are designed to operate with supply pressures of 4-13 inches w.c. (1.0 to 3.2 kPa).

To remove a valve, shut off 120-volt power and the manual gas shutoff valve. Remove the top front panel from the unit. Disconnect the wires to the valve. Disen-gage the flanged fitting before and after the valve, and remove the valve. Re-install in reverse order. Ensure o-rings are properly installed for both inlet and outlet. Turn on manual gas shutoff valve and 120 volt power and check appliance operation and tightness of gas valve connections.

7.2.4 Manual Reset High Limit Control

The high limit switch is manual reset switch with an adjustable set point, up to 240°F (116°C) on boiler models and 200°F (93°C) on water heater models and boilers ordered with low temperature controls. To replace the switch, shut off the 120-volt power to the appliance. Remove the cover from the switch to access the mounting screws. Remove the screws, and pull the switch off the control panel. Remove the capilliary and bulb from the thermal well located in the header. Replace in reverse order.

7.2.5 Temperature Control

The temperature control is a Honeywell L6008. To replace the control, shut off the 120-volt power to the appliance. Remove the cover from the control panel, and remove the mounting screws to remove the controller. Replace in reverse order.

7.2.6 Ignition Controls

The ignition controls ensure the proved interrupted-type ignition system. They control the hot surface ignitors and prove that the flame signal is appropriate for powering the gas valves. It also controls the blower's pre-purge and post-purge. Brute Deluxe sizes 500 and 750 have one ignition control. Sizes 1000 to 2000 have two ignition controls. On sizes up to 750, one ignition control controls stages 1 and 2. On unit sizes 1000–2000, one ignition control is for stage 1, and the other is for stage 2.

To replace a control, shut off the 120-volt power to the appliance. Remove the cover from the control panel. Remove the electrical connectors from the ignition control. Take out the controller's mounting screws, and pull the controller out. Replace in reverse order.

7.2.7 Ignitors/Sensor

The ignitor/sensor used are 120v "hot surface" type. They are energized whenever there is a call for heat and switched off when ignition is established and flame has been sensed. Brute Deluxe sizes 500 and 750 have one ignitor/sensor. Sizes 1000 to 2000 have two ignitor/sensors. To replace the ignitor/sensor, shut off the 120-volt power to the appliance, remove the ignitor access panel, disconnect the Molex connector, remove the two mounting screws on the ignitor/sensor flange and pull the ignitor out. ((Hot Surface) Ignitor and the Flame Sensor are the same items). Install in reverse order, always using a new ignitor gasket with the replacement ignitor.

⚠ Caution
Ignitor gets hot.

7.2.8 Transformer

The transformer is not capable of supplying control voltage for external devices such as zone valves, which must have their own separate power supply. Should a transformer need replacing, shut off the 120-volt power. Unplug the transformer wires, remove the mounting screws and remove the transformer. Replace transformer in the reverse order.

7.2.9 Blowers

The combustion air blowers bring the combustion air for the Brute Deluxe from the upper chamber to the lower chamber. Mixing of the gas and air occurs in the burners. Sizes 500, 750 and 1000 each have one blower, and sizes 1250 to 2000 each have two blowers. If a blower change is required, turn off the 120-volt power and gas supply to the unit. Remove the front panel. Disconnect the blower's wire harness. Remove the screws at the blower flange, and pull the blower out. Replace blower in reverse order, ensuring that all joints are made correctly. After replacement, ensure that the unit operates properly, by following the set-up procedure in this manual.

7.2.10 Flow Switch

The Brute Deluxe uses a paddle-type flow switch to ensure that the unit has water flow before ignition is allowed.

7.2.11 Heat Exchanger Coil

⚠ WARNING

Black carbon soot buildup on a dirty heat exchanger can be ignited by a random spark or flame, thereby creating a risk of fire or explosion.. To prevent this from happening, dampen the soot deposits with a wet brush or fine water spray before servicing the heat exchanger.

The Brute Deluxe has a pre-mixed burner system. These systems provide the burners with sufficient air for complete combustion, and black carbon sooting is seldom experienced. If sooting is suspected, view ports for inspection of the heat exchanger are provided on the right side of the boiler. They are located below the headers, and are accessed by opening the small round cover that is attached by one screw. In the unlikely event that there is a buildup of black carbon soot or other debris on the heat exchanger, clean per the following:

1. Disconnect the electrical supply to the unit.
2. Turn off the gas supply by closing the manual gas valve on the heater.
3. Disconnect and remove the wires, conduit and sensors from all components that are attached to the inlet/outlet header.
4. Isolate the heat exchanger from the water supply.
5. Disconnect the header flanges from the inlet and outlet.
6. Allow the heat exchanger to drain. Remove the front cover(s) by removing the rubber access strip(s) and the retaining screws. Remove the venting and remove the top, by removing the screws that attach the top to the side panels. Remove the side panels. Remove the front lower panels sealing the combustion area. To remove the gas train, disconnect the unions located below the intermediate pan and the field installed union located outside the cabinet, and pull up, bringing the union end connectors through the grommets in the intermediate pan. To remove the intermediate pan, remove the slide out control assembly and blower(s) to reveal the screws. Remove the screws holding the intermediate pan, and lift up to remove it. The heat exchanger has integral metal sections attached, which connect to the frame of the boiler. Locate and remove the screws along the front, rear and bottom of the integral metal sections, and remove the heat exchanger and metal sections by lifting up. On the larger appliances, a center heat exchanger support must be unbolted before it can be removed.
7. Remove the heat exchanger from the unit. **Note:** The heat exchangers are heavy and may require two people to remove to avoid personal injury.
8. Clean the heat exchanger: A light accumulation of soot or corrosion on the outside of the heat exchanger can be easily removed. Use a wire brush to remove loose soot and scale from the heat exchanger. Do not use water or compressed air for cleaning.
9. **Note**: While the heat exchanger is out of the unit, inspect the firewall refractory insulation. Replace if necessary.
10. Inspect the inside of the copper tubes for scale buildup. Scale can build up on the inner surface of the heat exchanger tubes, which can restrict water flow. If the tubes show signs of scaling, clean the internal surface. Bradford White offers a tube cleaning kit, part number R0010000.
11. Reassemble in the reverse order, and check appliance operation after start-up.

NOTE: The Warranty does not cover damage caused by lack of required maintenance, lack of water flow, or improper operating practices.

SECTION 8. Trouble Shooting

8.1 Resolving Lockouts

There are many causes of lockouts. The three most common causes are: (1) inadequate gas supply, (2) poor combustion, (3) ignitor failure.

1. **Inadequate gas supply:** Before proceeding, ensure that the gas supply has not been shutoff or the LP tank (LP boilers) is not empty. If your unit is equipped with the optional gas pressure switches,

then the Low Pressure switch might have tripped and will need to be reset.

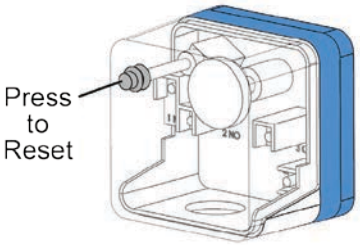

Then, restart the boiler and observe the operational cycle. After a 15-second fan pre-purge, the ignitor will heat up for 20 seconds, and then the unit will light. If it does not, check the gas supply pressure to the appliance, after resetting the appliance and attempting another start-up. The gas pressure to the appliance must be above 5" W.C. (1.2kPa) throughout the entire start-up cycle. If it is not, correct the supply problem (check gas valves or supply piping). If the supply pressure is adequate, consult the factory for assistance.

2. **Poor combustion:** Poor combustion should be suspected if there is a strong flue gas odor. The odor may result from an improper gas/air ratio (high or low O_2 or CO_2). Brute Deluxe appliances operate best with 45% excess air (8% CO_2 on natural gas, 9.2% CO_2 on LP). Check the CO_2 of the appliance and adjust if necessary.
3. **Ignitor failure:** If the boiler goes through a normal start cycle but combustion does not occur, ignitor failure should be suspected. Check the ignitor by unplugging the ignitor plug and measuring the ignitor resistance. It should be 50-80 ohms at room temperature. If the resistance is not 50-80 ohms, replace the ignitor. If the resistance is correct, reset the boiler and check for 120 VAC at the ignitor plug during the start cycle. If there is no voltage, replace the faulty ignitor wire harness or the ignition control.

8.2 Delayed Ignition — Possible Causes

A defective burner can cause a delayed ignition. If the gas supply pressure is proper and the gas valves are functioning properly, then burners should be inspected. There should be no distortion or perforations in the burners outside of the active burner port area. Replace if indicated.

8.3 Short Cycling — Boiler

Because the Brute Deluxe is a stage-fired boiler, and its input will decrease when there is a reduction in heating load, short cycling is greatly reduced. If the heating load drops below the minimum input of the boiler for an extended period, the boiler will have a tendency to short cycle. This can be a symptom of improper control strategy or setpoints, or a load distribution problem. Contact your Bradford White representative to discuss possible remedies.

8.4 Short Cycling — Water Heater

Short cycling will generally occur only in combination space heating and water heating applications when the water heater is operating in the space-heating mode. Because the Brute Deluxe is a stage-fired water heater and its input will reduce when there is a reduction in heating load, short cycling is greatly reduced. If the heating load drops below the minimum input of the water heater for an extended period, the water heater will have a tendency to short cycle. If short cycling is frequently experienced, regardless of the control's attempt to limit it, the heating load should be redistributed to control it.

If short cycling occurs in a water heater application, it is probably caused by undersized piping between the water heater and the storage tank or by some other factor that restricts proper water flow through the water heater. The cause should be determined and corrected.

8.5 High Gas Consumption

Appliances operating with an improper air/fuel ratio are very inefficient and consequently, have very high gas consumption. Because efficiency is high when the CO_2 is high (or O_2 is low), appliances operating with low CO_2 or high O_2 (especially LP appliances) consume more gas. Adjust the CO_2 or O_2 for optimum efficiency. If no combustion analyzing equipment (CO_2 or O_2) is available then a proper adjustment of the air/fuel ratio (CO_2 or O_2) cannot be accomplished. However, by briefly sniffing the flue gases it is possible to determine if the CO_2 or O_2 is within the proper range. No significant flue gas odor should be detected when combustion is proper. A strong piercing smell indicates poor combustion and generally a lean mixture - low CO_2 or high O_2. The CO_2 should be 8% at high fire. To check the CO_2, first verify that the supply gas pressure is within 5" to 13" w.c. (1.2 to 3.2 kPa) With the Brute Deluxe running with all stages firing, set the air box pressure to 1.5" w.c. (0.37 kPa) (as a starting point), by adjusting the air shutter(s) at the bottom of the fan(s). Check the CO_2, and adjust the air shutters if further adjustment to the CO_2 is needed. Sizes 1250 to 2000 have two blowers and two air chambers (boxes). The pressure of each air box must be equal when the final adjustment is made.

SECTION 9. Replacement Parts

Only genuine Bradford White replacement parts should be used.

9.1 General Information

To order or purchase parts for the Bradford White Brute Deluxe, contact your nearest Bradford White dealer or distributor. If they cannot supply you with what you need, contact Customer Service *(see back cover for address, telephone and fax numbers)*.

9.2 Parts List - *see next pages.*

Item	Description	Size 500	Size 750	Size 1000	Size 1250	Size 1500	Size 1750	Size 2000
	Sheet Metal Components – *See Figure 23*							
1	Panel, Jacket, Front	5F3320	7F3320	10F3320	12F3320	15F3320	17F3320	20F3320
2A	Panel, Jacket, Side, Lower Left	5F3420	5F3420	5F3420	5F3420	5F3420	5F3420	5F3420
2B	Panel, Jacket, Side, Lower Right	5F3421	5F3421	5F3421	5F3421	5F3421	5F3421	5F3421
3A	Panel, Jacket, Side, Lower Left	5F3520	5F3520	5F3520	5F3520	5F3520	5F3520	5F3520
3B	Panel, Jacket, Side, Lower Right	5F3521	5F3521	5F3521	5F3521	5F3521	5F3521	5F3521
4	Panel, Side, Top Left, Jacket	5F3400	5F3400	5F3400	5F3400	5F3400	5F3400	5F3400
5	Panel, Side, Top Right, Jacket	5F3501	5F3501	5F3501	5F3501	5F3501	5F3501	5F3501
6	Panel, Rear, Jacket	5F3220	7F3220	10F3220	12F3220	15F3220	17F3220	20F3220
7	Panel, Top, Jacket	5F3021	7F3021	10F3021	12F3021	15F3021	17F3021	20F3021
8	Weldment, Vent Plate	5F3100	7F3100	7F3100	12F3100	12F3100	12F3100	20F3100
9	Weldment, Housing, Air Inlet/Filter	5F3800	5F3800	10F3800	12F3800	12F3800	12F3800	20F3800
10	Panel, Access, Filter	5F3701	5F3701	5F3701	12F3701	12F3701	12F3701	12F3701
11	Filter, Combustion Air	A2088700	A2088700	A2088700	A2088700	A2088700	A2088700	A2088700
		(1)	(1)	(1)	(2)	(2)	(2)	(2)
12A	Pump Housing Right Side	5C3018	5C3018	5C3018	5C3018	5C3018	5C3018	5C3018
12B	Pump Housing Left Side	5C3019	5C3019	5C3019	5C3019	5C3019	5C3019	5C3019
12C	Pump Housing Cover	5C3020	5C3020	5C3020	5C3020	5C3020	5C3020	5C3020
14	Cover, Pipe, Gas Manifold	5F3304	5F3304	10F3304	20F3304	20F3304	20F3304	20F3304
		(2)	(2)	(2)	(2)	(2)	(2)	(2)
	Internal Components – *See Figure 24*							
16	Assembly, Base	5F1020	7F1020	10F1020	12F1020	15F1020	17F1020	20F1020
17	Panel, Front, Combustion Chamber	5F2003	7F2003	10F2003	12F2003	15F2003	17F2003	20F2003
18	Panel, Rear, Combustion Chamber	5F2006	7F2006	10F2006	12F2006	15F2006	17F2006	20F2006
19	Panel, Top, Combustion Chamber	5F2001	7F2001	10F2001	12F2001	15F2001	17F2001	20F2001
20	Weldment, Chamber, Left Side, Bottom	5C2602	5C2602	5C2602	5C2602	5C2602	5C2602	5C2602
21	Weldment, Chamber, Right Side. Bottom	5C2202	5C2202	5C2202	5C2202	5C2202	5C2202	5C2202
22	Panel, Chamber, Left/Right Side, Top	5C2002	5C2002	5C2002	5C2002	5C2002	5C2002	5C2002
		(2)	(2)	(2)	(2)	(2)	(2)	(2)
23	Assembly, Sight Glass	10956000	10956000	10956000	10956000	10956000	10956000	10956000
24	Panel, Left Side, Air Box	5F2015	5F2015	5F2015	5F2015	5F2015	5F2015	5F2015
25	Panel, Right Side, Air Box	5F2016	5F2016	5F2016	5F2016	5F2016	5F2016	5F2016
26	Panel, Access, Air Box	5F2004	7F2004	10F2004	12F2004	15F2004	17F2004	20F2004
27	Cover, Access Panel, Air Box	5F2005	5F2005	5F2005	5F2005	5F2005	5F2005	5F2005
		(1)	(1)	(1)	(2)	(2)	(2)	(2)
28	Divider, Chamber, Upper, Air Box				15F2005	15F2005		
29	Divider, Chamber, Lower, Air Box				15F2002	15F2002		
30	Divider, Front Chamber, Combustion Chamber						20F2002	20F2002
31	Assembly, Exhaust Stack	5F2027	7F2027	7F2027	12F2027	12F2027	12F2027	12F2027

Item	Description	Size 500	Size 750	Size 1000	Size 1250	Size 1500	Size 1750	Size 2000
32	Assembly, Copper Tube, Heat Exchanger	5C4000	7C4000	10C4000	12C4000	15C4000	17C4000	20C4000
	Assembly, Cupro-Nickel, Heat Exchanger	5C4020	7C4020	10C4020	12C4020	15C4020	17C4020	20C4020
33	Tile, Side (Left and Right)	T2015600	T2015600	T2015600	T2015600	T2015600	T2015600	T2015600
		(2)	(2)	(2)	(2)	(2)	(2)	(2)
34	Tile, Front	T2017300						
35	Tile, Front, Left Side	T2016200	T2016800	T2016800	T2016800	T2016800	T2016800	T2016800
36	Tile, Front, Right Side		T2016300	T2017100	T2017900	T2017100	T2017900	T2017100
37	Tile, Front, Center				T2016900	T2016900	T2016900	T2016900
					(1)	(1)	(2)	(2)
38	Tile, Rear	T2015700						
39	Tile, Rear, Left Side		T2017500	T2016600	T2016600	T2016600	T2016600	T2016600
40	Tile, Rear, Right Side		T2016600	T2016600	T2018100	T2016600	T2018100	T2016600
41	Tile, Rear, Center				T2017200	T2017200	T2017200	T2017200
					(1)	(1)	(2)	(2)
42	Tile, Bottom	T2015500						
43	Tile, Bottom, Left Side		T2017400	T2017400	T2017400	T2017400	T2017400	T2017400
44	Tile, Bottom, Right Side		T2016500	T2017400	T2018000	T2017400	T2018000	T2017400
45	Tile, Bottom, Center				T2015900	T2015900	T2015900	T2015900
					(1)	(1)	(2)	(2)
	Gas Train Components – See Figure 24							
46	Blower	A2111900	A2111900	A2111900	A2111900	A2111900	A2111900	A2111900
		(1)	(1)	(1)	(2)	(2)	(2)	(2)
47	Weldment, Blower Mount	5C5300	5C5300	5C5300	5C5300	5C5300	5C5300	5C5300
		(1)	(1)	(1)	(2)	(2)	(2)	(2)
47A	Assembly, Blower Damper				15C5400	15C5400	15C5400	15C5400
					(2)	(2)	(2)	(2)
48	Manifold, Gas Supply	5C6100	7C6100	10C6100	12C6100	15C6100	17C6100	20C6100
49	Valve, Ball, Manual Shutoff	V2003100	V2003100	V2003200	V2003300	V2003300	V2003300	V2003300
50	Valve, Gas, Combination	V2017600	V2017600	V2017600	V2017600	V2017600	V2017600	V2017600
		(2)	(3)	(3)	(5)	(5)	(6)	(6)
50A	O-Ring	V2017500	V2017500	V2017500	V2017500	V2017500	V2017500	V2017500
		(4)	(6)	(6)	(10)	(10)	(12)	(12)
51A	Weldment, Pipe, Gas Valve/Ball Valve	P2073600 (2)	P2073600 (3)	P2073600 (3)	P2073600 (5)	P2073600 (5)	P2073600 (6)	P2073600 (6)
51B	4" Nipple, black	P0014700 (2)	P0014700 (3)	P0014700 (3)	P0014700 (5)	P0014700 (5)	P0014700 (6)	P0014700 (6)
51C	Union	P0030400 (2)	P0030400 (3)	P0030400 (3)	P0030400 (5)	P0030400 (5)	P0030400 (6)	P0030400 (6)
52	Valve, Ball, Manual Shutoff, Secondary	V2000200	V2000200	V2000200	V2000200	V2000200	V2000200	V2000200
		(2)	(3)	(3)	(5)	(5)	(6)	(6)
53	Manifold, 3 Burner/Orifice, Left	L2012800	L2012800		L2012800	L2012800	L2012800	
		(1)	(2)		(3)	(1)	(2)	

Item	Description	Size 500	Size 750	Size 1000	Size 1250	Size 1500	Size 1750	Size 2000
	Manifold, 3 Burner/Orifice, Right	L2012900 (1)	L2012900 (1)		L2012900 (2)	L2012900 (1)	L2012900 (1)	
	Manifold, 4 Burner/Orifice, Left			L2012600 (2)		L2012600 (2)	L2012600 (2)	L2012600 (4)
	Manifold, 4 Burner/Orifice, Right			L2012700 (1)		L2012700 (1)	L2012700 (1)	L2012700 (2)
54	Assembly, 3 Burner	L2012200 (2)	L2012200 (3)		L2012200 (5)	L2012200 (2)	L2012200 (3)	L2012200 (2)
	Assembly, 4 Burner			L2012500 (3)		L2012500 (3)	L2012500 (3)	L2012500 (4)
55	Orifice, Gas, Natural	L2013000 (6)	L2013000 (9)	L2013000 (12)	L2013000 (15)	L2013000 (18)	L2013000 (21)	L2013000 (24)
	Orifice, Gas, Propane	L2012400 (6)	L2012400 (9)	L2012400 (12)	L2012400 (15)	L2012400 (18)	L2012400 (21)	L2012400 (24)
56	Gasket, 3 Burner	S2012700 (2)	S2012700 (3)		S2012700 (5)	S2012700 (2)	S2012700 (3)	
	Gasket, 4 Burner			S2012500 (3)		S2012500 (3)	S2012500 (3)	
57	Ignitor, Hot Surface with Gasket	2400-286 (1)	2400-286 (1)	2400-286 (2)	2400-286 (2)	2400-286 (2)	2400-286 (2)	2400-286 (2)
	Heat Exchanger Components – *See Figure 25*							
58	Flow Switch	E0013000	E0013000	E0013000	E0013000	E0013000	E0013000	E0013000
59	Low Water Cutoff (optional)	E2076500	E2076500	E2076500	E2076500	E2076500	E2076500	E2076500
60	Gauge, Temperature/Pressure	A0079000	A0079000	A0079000	A0079000	A0079000	A0079000	A0079000
62	Tee, Adapter, Outlet, Cast Iron	20130001	20130001	20130002	20130002	20130002	20130002	20130002
	Tee, Adapter, Outlet, Cast Iron (boiler)						20130009	20130009
	Tee, Adapter, Outlet, Bronze	20150302	20150302	20150303	20150303	20150303	20150303	20150303
63	Relief Valve, Hydronic, 75 Psi	A0063300	A0063300	A0063600	A0063600	A0063600	A0063600	A0002700
	Relief Valve, Water Heater, 125 Psi	A0001200	A0001200	A0001200	A0001200	A0064400	A0064400	A0064400
64	Flange, Connection, Cast Iron	10391302	10391302	10391303	10391303	10391303	10391303	10391303
	Flange, Connection, Bronze	20255401	20255401	10391304	10391304	10391304	10391304	10391304
65	Gasket, Connection Flange	S0063700 (2)	S0063700 (2)	S0063700 (2)	S0063700 (2)	S0063700 (2)	S0063700 (2)	S0063700 (2)
66	Cover, In/Out, Glass-Lined Cast Iron	10364504	10364504	10364504	10364504	10364504	10364504	10364504
	Cover, In/Out, Bronze	10364501	10364501	10364501	10364501	10364501	10364501	10364501
67	Gasket, Header/Cover	S0095100 (2)	S0095100 (2)	S0095100 (2)	S0095100 (2)	S0095100 (2)	S0095100 (2)	S0095100 (2)
68	Water Barrier, Inlet/Outlet	20230101	20230101	20230101	20230101	20230101	20230101	20230101

Item	Description	Size 500	Size 750	Size 1000	Size 1250	Size 1500	Size 1750	Size 2000
69	Baffle, Water Deflector, Inlet	10338300	10338300	10338300	10338300	10338300	10338300	10338300
70	Well, Immersion, Temperature Control	E2058300	E2058300	E2058300	E2058300	E2058300	E2058300	E2058300
71	Cover, Return, Glass-Lined Cast Iron	10364300	10364300	10364300	10364300	10364300	10364300	10364300
	Cover, Return, Bronze	10364301	10364301	10364301	10364301	10364301	10364301	10364301
72	Pump Housing, Glass-Lined Cast Iron	S2056900	S2056900	S2056900	S2056900	S2056900	S2056900	S2056900
73	Baffle, Diffuser, Pump Housing Inlet	10338400	10338400	10338400	10338400	10338400	10338400	10338400
	Electrical Components – *See Figure 26*							
74	Control, Gas Ignition, Three-Try (standard)	E2313900 (1)	E2313900 (1)	E2313900 (2)	E2313900 (2)	E2313900 (2)	E2313900 (2)	E2313900 (2)
	Control, Gas Ignition, Single-Try (CSD-1 option)	E2107300 (1)	E2107300 (1)	E2317300 (2)	E2317300 (2)	E2317300 (2)	E2317300 (2)	E2317300 (2)
75	SPDT, Toggle Switch	E0109200	E0109200	E0109200	E0109200	E0109200	E0109200	E0109200
75A	DPDT Switch	E2056300	E2056300	E2056300	E2056300	E2056300	E2056300	E2056300
76	Terminal Block, 16-Position, Dual Row	E2327500	E2327500	E2327500	E2327500	E2327500	E2327500	E2327500
77	Switch, Hi-Limit Manual Reset (boiler)	E0015900	E0015900	E0015900	E0015900	E0015900	E0015900	E0015900
	Controller, Temperature, 100° to 200°F, Manual Reset	E2217800	E2217800	E2217800	E2217800	E2217800	E2217800	E2217800
78	Thermostat, 2-Stage, 130° to 230°F	E0093200	E0093200	E0093200	E0093200	E0093200	E0093200	E0093200
79	Panel, Mounting, Limits/Ignition Control	5F7001	5F7001	5F7001	5F7001	5F7001	5F7001	5F7001
80	Panel, Cover, High Limit/Ignition Control	5F7003	5F7003	5F7003	5F7003	5F7003	5F7003	5F7003
81	Panel, Access, Terminal	5F7006	5F7006	5F7006	5F7006	5F7006	5F7006	5F7006
82	Switch, Rocker, 30A, 125 VAC	E2343300	E2343300	E2343300	E2343300	E2343300	E2343300	E2343300
83	Terminal Block, 6-Position, Dual Row	E2327700	E2327700	E2327700	E2327700	E2327700	E2327700	E2327700
84	Terminal Block, 12-Position, Dual Row	E2342500	E2342500	E2342500	E2342500	E2342500	E2342500	E2342500
85	Switch, Pressure, Diaphragm, SPDT	E0240900 (2)	E0240900 (2)	E0240900 (2)	E0240900 (3)	E0240900 (3)	E0240900 (3)	E0240900 (3)
86	Bracket, Pressure Switch	5F7007	5F7007	5F7007	5F7007	5F7007	5F7007	5F7007
87	Transformer, 150 VA, 120/24V	E2310400	E2310400	E2310400	E2310400	E2310400	E2310400	E2310400
88	Relay, Time Delay (24 VAC) Delay on Break, Adj.	E2077700	E2077700	E2077700	E2077700	E2077700	E2077700	E2077700
89	Relay, 24VAC, DPDT	E2327800	E2327800		E2327800 (2)	E2327800 (2)	E2327800 (2)	E2327800 (2)
90	Panel, Mounting, LWCO Switch (optional)	5F7005	5F7005	5F7005	5F7005	5F7005	5F7005	5F7005
91	Wire Harness #1, Fenwal	E2328800	E2328800	E2328400	E2328400	E2328400	E2328400	E2328400
92	Wire Harness #2, Control Panel	E2328900	E2328900	E2328500	E2330100	E2330100	E2330100	E2330100
93	Wire Harness #3, Main	E2329000	E2329000	E2329100	E2328600	E2328600	E2328600	E2328600
94	Wire Harness #4, Local Remote SW	E2328700	E2328700	E2328700	E2328700	E2328700	E2328700	E2328700

NOTE: Quantity is one (1) unless otherwise indicated.

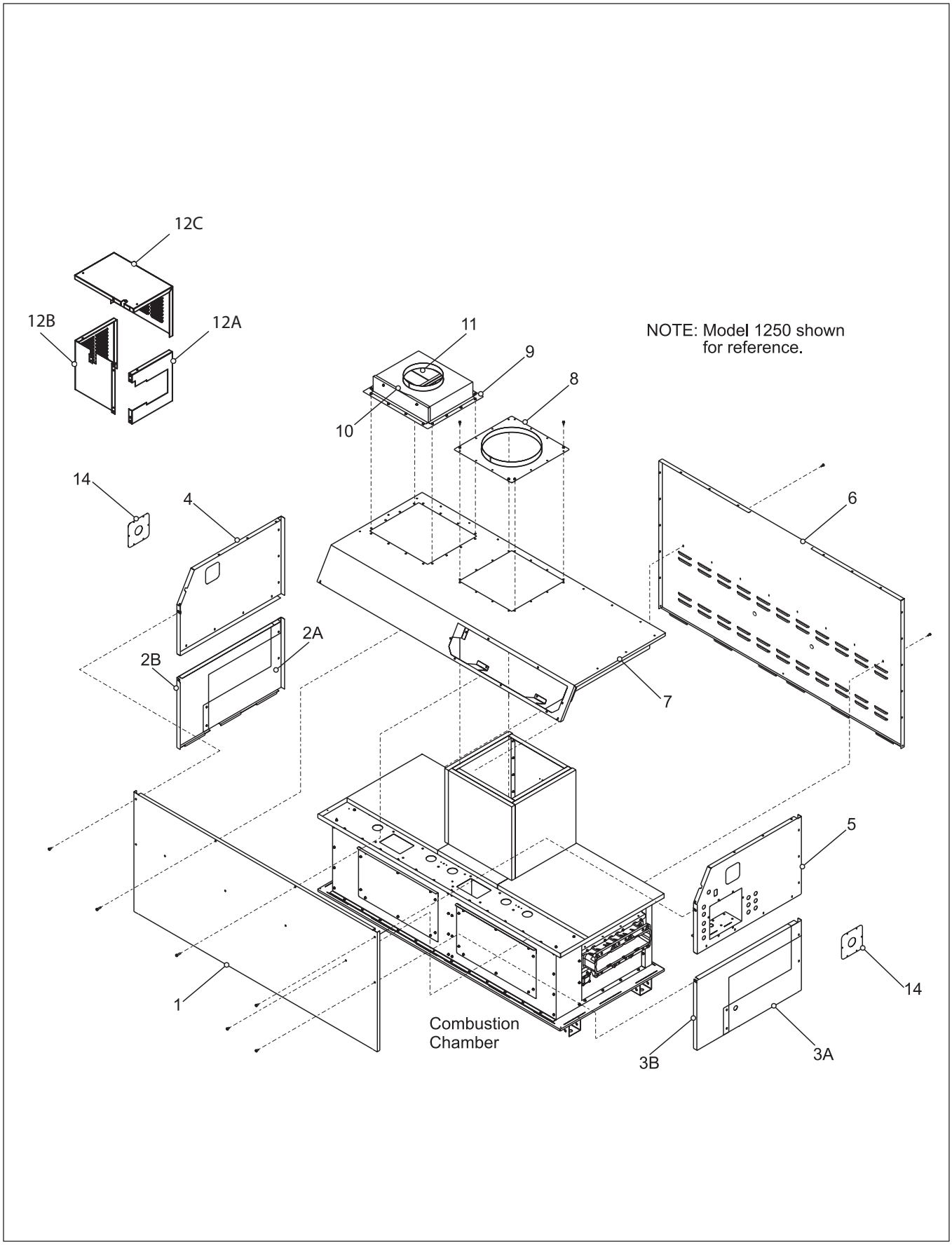

Figure 23. Sheet Metal Components.

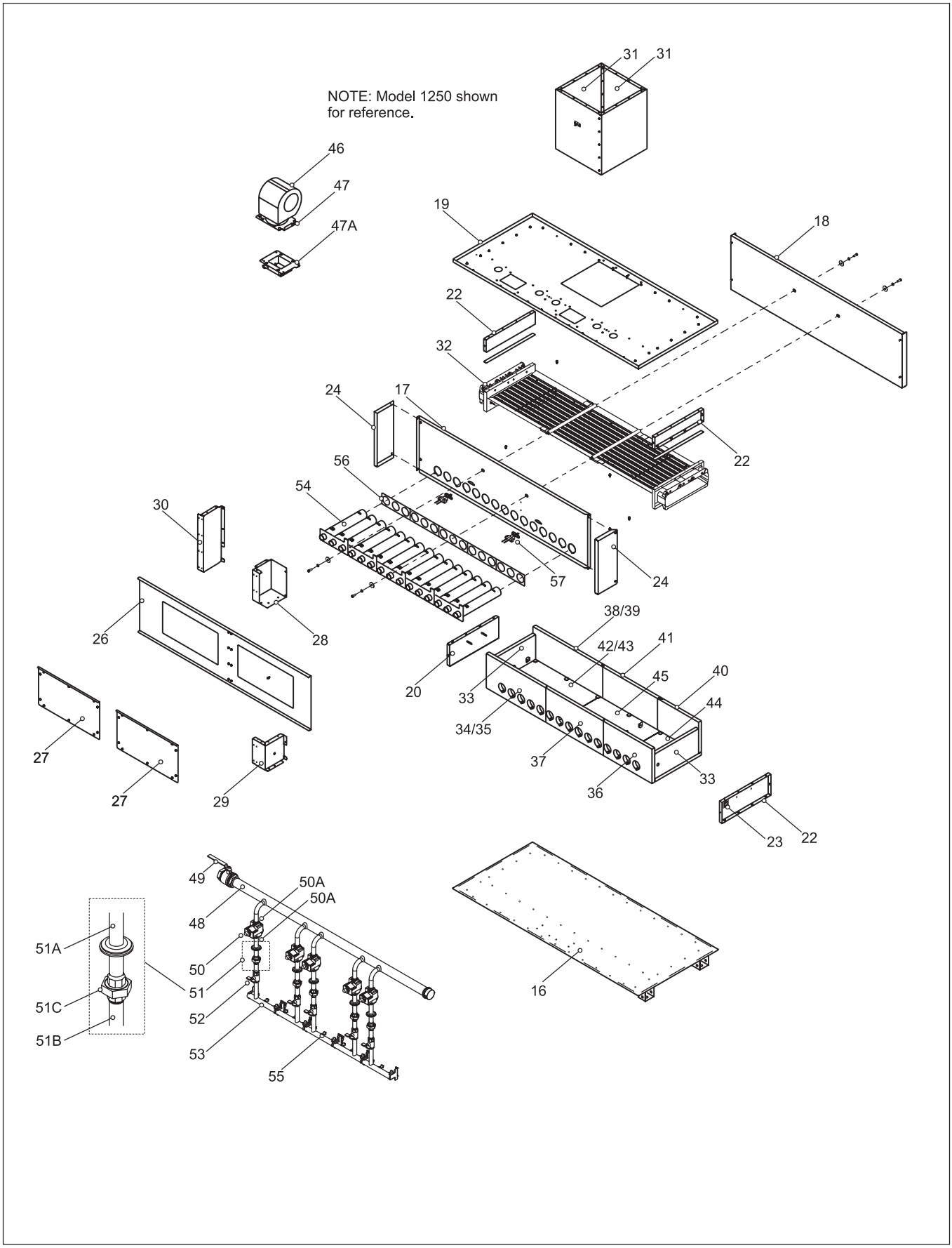

Figure 24. Internal Components

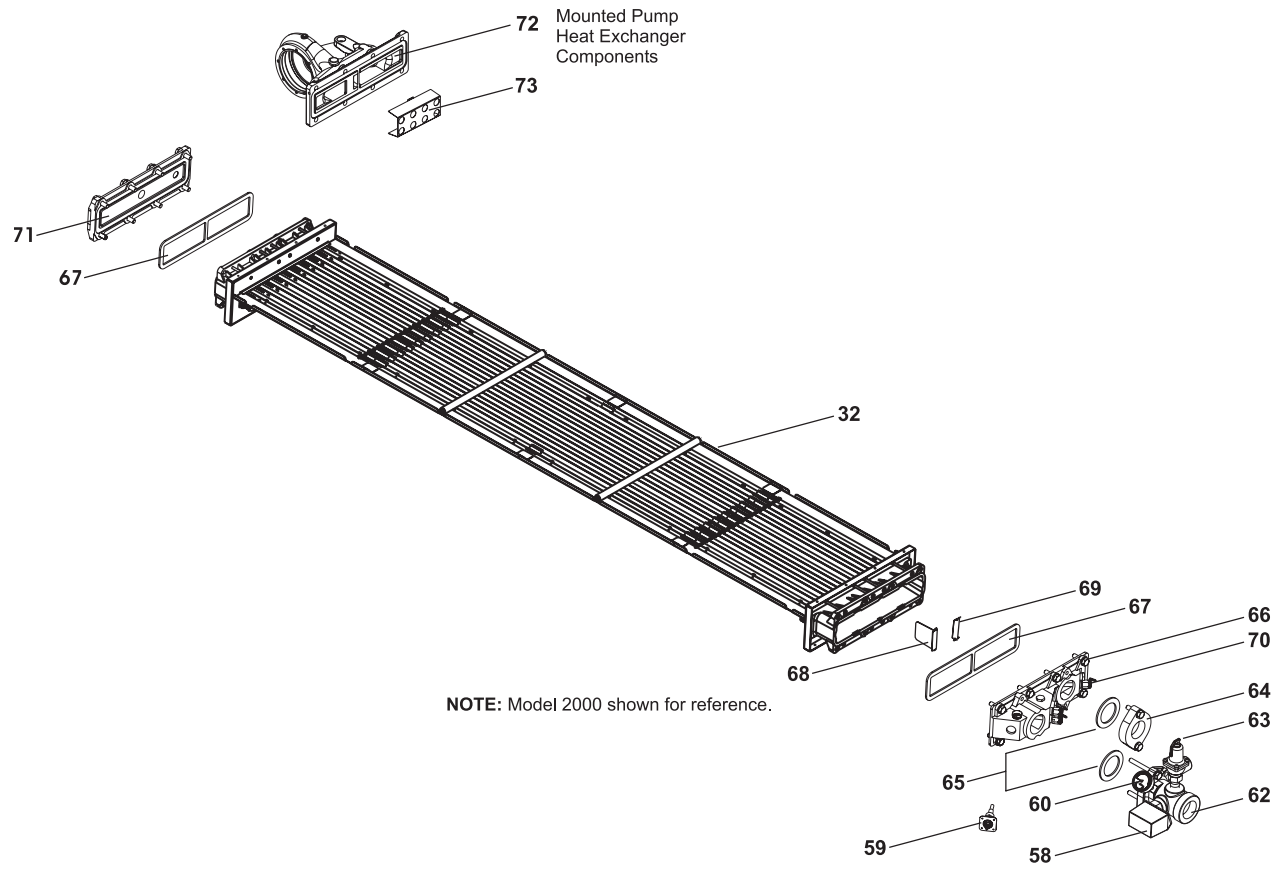

Brute Deluxe Hydronic Boiler

Size	Pump p/n
500	A2001700
750	A2001700
1000	A2001800
1250	A2001800
1500	A2001900
1750	A2001900
2000	A2109700

Brute Deluxe Water Heater

Size	Pump p/n		
	Soft Water	Normal Water	Hard Water
500	A2001700	A2001700	A2001900
750	A2001700	A2001700	A2001900
1000	A2001700	A2001800	A2001900
1250	A2001700	A2001800	A2001900
1500	A2001700	A2001900	A2001900
1750	A2001900	A2001900	A2001900
2000	A2109700	A2109700	A2109700

Figure 25. Heat Exchanger Components.

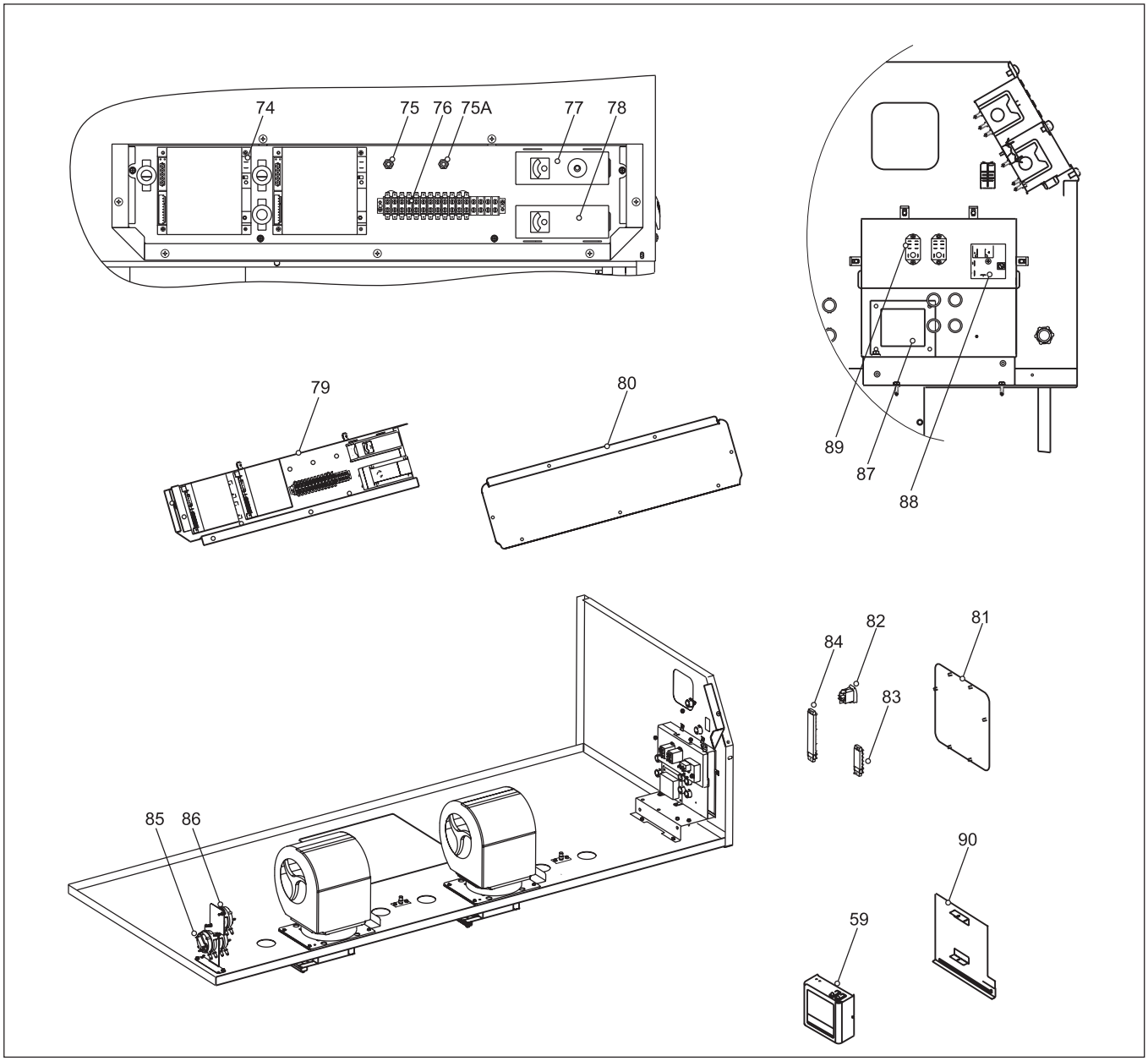

Figure 26. Electrical Components.

H2343300H

Bradford White Corporation reserves the right to change specifications, components, features, or to discontinue products without notice.

BRADFORD WHITE®

200 Lafayette St.
Middleville, MI 49333
Warranty: (800) 531-2111

www.BradfordWhite.com

Litho in U.S.A. © Bradford White 1609 Document 1245H-BW