Installation and Operation Instructions for

Infiniti® GR Series

Wall-Mounted, Modulating Gas Condensing Water Heater with Recirculation pump

Model RTGR199N1 / RTGR199X1
(199,000 BTU/hr)

- Natural Gas (NG) - Factory Configuration
- Propane (LP) - Factory Configuration

Intertek

FOR YOUR SAFETY: This product must be installed and serviced by a professional service technician, qualified in water heater installation and maintenance. Improper installation and/or operation could create carbon monoxide gas in flue gases which could cause serious injury, property damage, or death. Improper installation and/or operation will void the warranty.

⚠ WARNING

If the information in this manual is not followed exactly, a fire or explosion may result causing property damage, personal injury or loss of life.

Do not store or use gasoline or other flammable vapors and liquids in the vicinity of this or any other appliance.

WHAT TO DO IF YOU SMELL GAS

- **Do not try to light any appliance.**
- **Do not touch any electrical switch; do not use any phone in your building.**
- **Immediately call your gas supplier from a nearby phone. Follow the gas supplier's instructions.**
- **If you cannot reach your gas supplier, call the fire department.**

Installation and service must be performed by a qualified installer, service agency, or gas supplier.

⚠ AVERTISSEMENT

Assurez-vous de bien suivres les instructions données dans cette notice pour réduire au minimum le risque d'incendie ou d'explosion ou pour éviter tout dommage matériel, toute blessure ou la mort.

Ne pas entreposer ni utiliser d'essence ou ni d'autres vapeurs ou liquides inflammables dans le à proximité de cet appareil ou de tout autre appareil.

QUE FAIRE SI VOUS SENTEZ UNE ODEUR DE GAZ:

- **Ne pas tenter d'allumer d'appareils.**
- **Ne touchez à aucun interrupteur. Ne pas vous servir des téléphones dans le bâtiment où vous vous trovez.**
- **Appelez immédiatement votre fournisseur de gaz depuis un voisin. Suivez les instructions du fournisseur.**
- **Si vous ne pouvez rejoindre le fournisseur de gaz, appelez le sservice des incendies.**

L'installation et l'entretien doivent être assurés par un installateur ou un service d'entretien qualifié ou par le fournisseur de gaz.

BRADFORD WHITE®
WATER HEATERS

TABLE OF CONTENTS

SECTION 1 Product Accessories

1.1 Introduction....4
1.2 Included with the Unit....4
1.3 Optional Accessory parts....5

SECTION 2 Product Characteristics

2.1 Model Nomenclature....6
2.2 Specifications....7
2.3 Dimensions....8
2.4 Names of Components....9

SECTION 3 Safety Regulations

3.1 Safety Symbols....10
3.2 Safety Precautions and Proper Use....12

SECTION 4 Installation

4.1 Location and Clearances....14
4.2 Wall Mount Bracket....15
4.2.1 The installation height and location....15
4.2.2 Hang the Water Heater....15
4.3 Combustion Air....16
4.3.1 Combustion Air from Room....16
4.3.2 Ducted Combustion Air....16
4.4 Venting (Exhaust)....17
4.4.1 Selecting Vent Pipe....19
4.5 General Location Guideline....20
4.6 Locations for Vent Pipe Terminal....21
4.6.1 Direct Venting Clearances....21
4.6.2 Non-Direct Venting Clearances....22
4.6.3 Venting Requirements in the Commonwealth of Massachusetts....23
4.6.4 Common Vent Test....24
4.7 Air Supply and Vent Connections....25
4.7.1 Vent / Air Pipe Lengths....25
4.7.2 Direct Venting....25
4.7.3 Single Venting(Air Supply from indoor space)....25
4.7.4 PolyPropylene Flexible Vertical Vent System....26
4.8 Vent / Air Pipe Termination....26
4.9 Cascade System....29
4.9.1 Piping....29
4.9.2 Electrical....32
4.9.3 Cascade Programming....33
4.9.4 Common Vent System....35
4.9.5 Installing the Common Vent System with PVC or CPVC venting materials....40
4.9.6 PVC Common Venting Componets Configuration....45
4.9.7 Polypropylene Common venting....45
4.10 Gas Supply and Piping....46
4.10.1 Gas Conversion....49
4.11 Gas Supply Pressure....49
4.12 Gas Setup and Adjustment....50
4.13 Gas High Altitude Setting....51
4.14 Plumbing Guidelines....52
4.15 Re-Circulation Setting....54
4.16 Air Handler Setting....59
4.17 Setting the Display Panel....60
4.17.1 Set the ‘Recirculation Timer Type’ to ‘Auto’....63
4.17.2 Set the ‘Recirculation Timer’ in ‘Prog’ mode....64
4.17.3 Recirculation function initialization setting....66
4.18 Disposal of Condensate....67
4.19 Pressure Relief Valve....67
4.20 Electrical Wiring Connections....68
4.21 DIP Switches....69
4.22 Wiring Diagram....70
4.23 Ladder Diagram....71
4.24 Electrical Connections....72

SECTION 5 Display Panel and Operation

5.1 Control Dial and Buttons....74
5.2 LCD Overview....75
5.3 Operating Mode....76
5.4 Status Display Mode....77
5.5 DHW Set Point Change Mode....78
5.6 Installer Mode....79
5.7 Error Mode....80

SECTION 6 Error Codes

6.1 Error Codes....81

SECTION 7 Troubleshooting

7.1 Diagnostics....85

SECTION 8 Maintenance
8.1 General Maintenance 88

SECTION 9 Installation Check
9.1 Quick View 91
9.2 Final check lists 91

SECTION 10 Infiniti Series Warranty

SECTION 1 Product Accessories

1.1 Introduction

This manual provides information necessary for the installation, operation, and maintenance of the GR Series. All application and installation procedures must be read and reviewed completely before proceeding with the installation. Consult the manufacturer, or your local factory representative, with any problems or questions regarding this equipment. Experience has shown that most operating problems are caused by improper installation.

All installations must be made in accordance with
1) American National Standard Z223.1/NFPA54-Latest Edition "National Fuel Gas Code" or
2) In Canada, CSA B149.1 "Natural Gas and Propane Installation Code" and with the requirement of the local utility or other authorities having jurisdiction. Such applicable requirements take precedence over the general instructions contained herein.

All electrical wiring is to be done in accordance with the local codes, or in the absence of local codes, with:
1) The National Electrical Code ANSI/NFPA No. 70-latest Edition, or
2) CSA STD. C22.1 "Canadian Electrical Code - Part 1". This appliance must be electrically grounded in accordance with these codes.

1.2 Included with the Unit

Items	Descriptions	Qty
Tankless Water Heater		1
Installation Instructions and User's Manual		1
Wall Mount Bracket	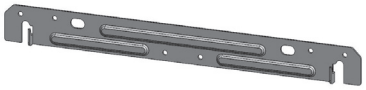	1
Bolts w/Anchors	4 4	
Vent terminal cap 2"		2
O-RING KIT		1
Condensate Hose		1

1.3 Optional Accessory parts

Description	Image	Description	Image
Non return valve kit for PVC or CPVC common venting		Base Rack (for back-to-back or in-line mounting)	
On-Demand Sensor Kit		Extension Rack (for back-to-back or in-line mounting)	
ODR Crossover Valve Kit		Cascade Cable (requires 1 per unit)	
Service Valve Kit With PRV		Easy Plumbing Manifold Kit	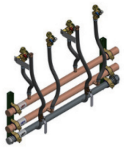
Service Valve Kit With Recirc and PRV		Polypropylene Common Venting System	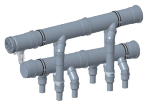
Outdoor Vent Kit		Condensate Neutralizer	
Pipe Cover		Complete Parts Kit for GS & GR 150, 199 models	

SECTION 2 Product Characteristics

2.1 Model Nomenclature

The Model Nomenclature is shown on your Rating Plate and consists of a series of letters and numbers that further identifies the characteristics of your GR Series Water Heater.

R T G	R	1 9 9	N
Model	**Pump Option**	**Size**	**Fuel**
BWC Tankless	S - No Pump R - With Recirculation Pump	199 MBH 150 MBH	N - Natural X - Propane

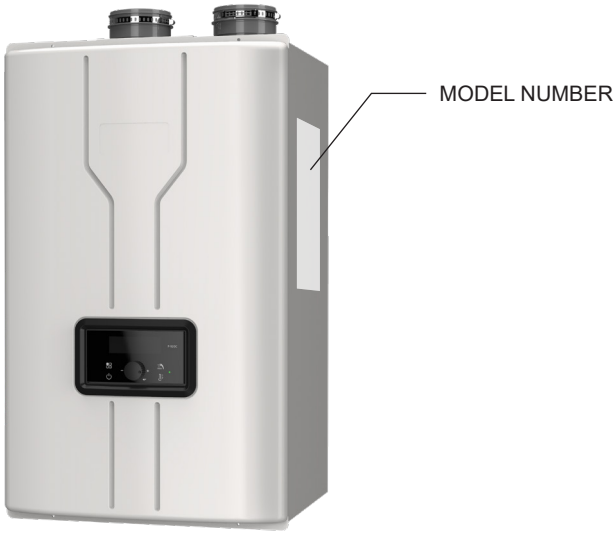

⚠ WARNING

Do not use this appliance if any part has been under water. Immediately call a qualified service technician to inspect the appliance and to replace any part of the control system and any gas control that may have been under water.

2.2 Specifications

Model Name			RTGR199N1 / RTGR199X1	
Gas Input Rate	MAX		199,000 Btu/h	
	MIN		13,000 Btu/h	
Hot Water Capacity	35°F Rise		11.1 Gal/min (42 L/min)	
	45°F Rise		8.7 Gal/min (32.9 L/min)	
	77°F Rise		5.1 Gal/min (19.3 (L/min)	
Installation			Indoor / Outdoor Wall Hung (with outdoor vent cap)	
Flue System			Sealed Combustion Direct Vent, Single Vent, Outdoor	
Max Vent Run			2" (60ft) / 3" (150ft) Schedule 40 PVC, CPVC, PP	
Orifice Size	NG (Gas / Needle)		0.330" (8.4mm) / 0.342" (8.7mm)	
	LP (Gas / Needle)		0.259" (6.6mm) / 0.263" (6.7mm)	
Gas Supply Pressure	NG		3.5" WC to 10.5" WC	
	LP		8.0" WC to 14" WC	
Manifold Pressure	Gas Type		NG	LP
	Low Fire	2" VENT	0.00" WC	0.00" WC
		3" VENT	0.00" WC	0.00" WC
	High Fire	2" VENT	-0.20" WC	-0.30" WC
		3" VENT	-0.20" WC	-0.30" WC
Power Supply	Main Supply		120V 60Hz	
	Max Current		Less than 2A	
Power Consumption	Standby		2.7W	
	Operation		188W	
	Anti Freeze		117W	
Ignition System			Direct Electronic Ignition / Automatic Flame Sensing	
Burner System			Premixed Metal Fiber Burner	
Gas Valve System			Air Ratio Valve	
Minimum Flow Activation Flow			0.5 GPM	
Internal Pipe Material			STS 304, Stainless Steel with PPS	
Dimensions			W 17.3" – H 27.6" – D 14.9"	
Weight			85 lbs	
Water Holding Capacity			Under 2 Gallons	
Display Panel / Control Board(PCB)			PR-952C / NGTH-9600C	
Water Pressure	MAX		150 psi	
	MIN		15 psi	
Materials	Casing		Cold Rolled Carbon Steel	
	Heat Exchanger		Heat Exchanger : SS 304	
Safety Devices			Flame Sensor, Overheat Cut Off Switch, Gas Leak Detector, Water Leak Detector, Exhaust Temperature Sensor, Water Temperature Sensor	
Complies with South Coast Air Quality Managment District 14 ng/J or 20 ppm NOx emission levels			Yes	

- Temperature

Operating ambient Temperature Range : Range: 14°F to 140°F (-10 to 60°C).
Operating Relative Humidity up to: 90% at 104°F (40°C).
Shipping & Storage Temperature Range of : -4°F to 176°F (-20 to 80°C).

2.3 Dimensions - [RTGR199N1 / RTGR199X1]

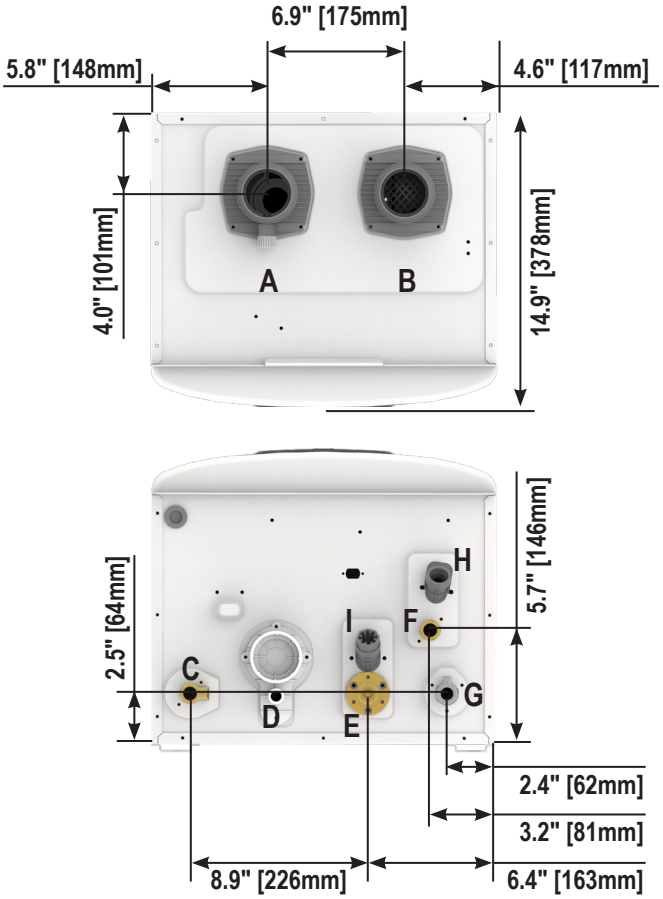

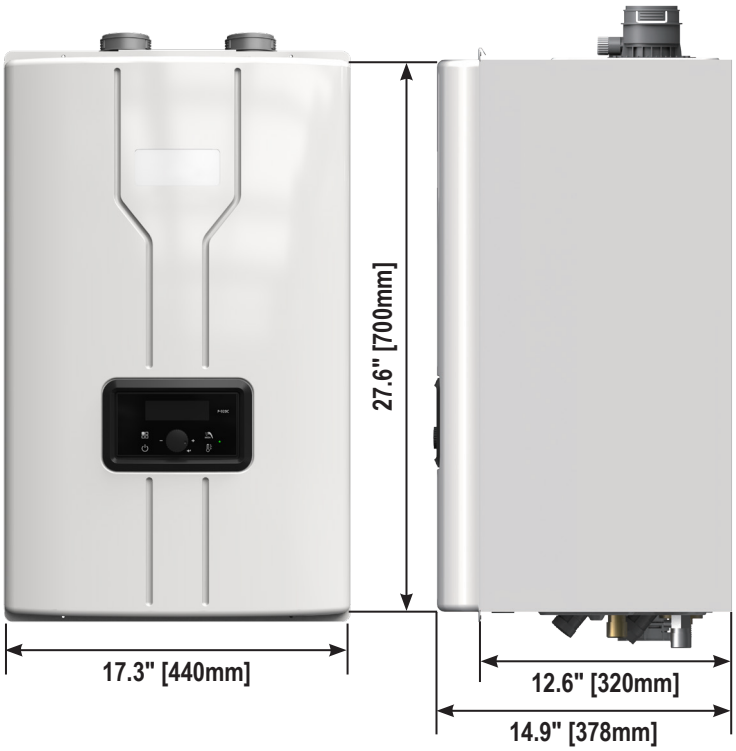

	Description	Size
A	Exhaust	2" PVC
B	Air Intake	2" PVC
C	Hot Water	3/4" NPT
D	Condensate	1/2" NPT
E	Recirculation Return Connection	3/4" NPT
F	Cold Water Connection	3/4" NPT
G	Gas	3/4" NPT
H	Cold Water Filter	-
I	Recirculation Return Filter	-

2.4 Names of Components [RTGR199N1 / RTGR199X1]

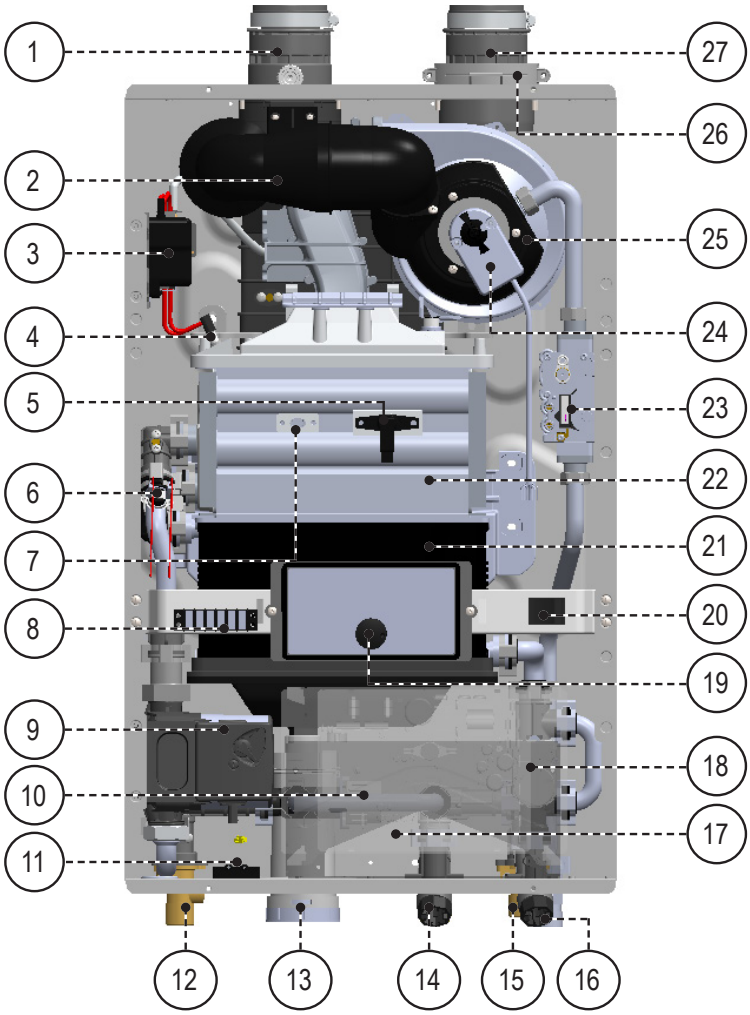

#	Name of Component
1	Vent Pipe Collar
2	Combustion Air Intake Assembly
3	Ignition Transformer
4	Igniter
5	Flame Detection Sensor
6	High Limit Switch
7	Sight Glass
8	Terminal Block
9	Circulation Water Pump
10	Mixing Valve (behind 17)
11	Water Leak Detector
12	Domestic Hot Water (DHW) Outlet
13	Condensate Trap Cleanout
14	Recirculation Return Connection with filter

#	Name of Component
15	Cold Water Inlet
16	Gas Inlet
17	Control Board (PCB)
18	Flow Control valve
19	Display Panel
20	Manual Power Switch
21	Secondary Heat Exchanger
22	Primary Heat Exchanger
23	Gas Valve
24	Air Gas Mixture (AGM) Actuator
25	Blower
26	Air Intake Filter
27	Air Intake Collar

SECTION 3 Safety Regulations

3.1 Safety Symbols

⚠ WARNING

To avoid product damage, personal injury, or even possible death, carefully read, understand, and follow all the instructions in the Installation and Operation manual before installation, operation and service the Water Heater.

Every circumstance that may involve a potential hazard cannot be anticipated. Therefore, all possible incidents are not included in our warnings. Proper installation, operation, and service are your responsibility.
You must make sure that the operation and settings of the Water Heater are safe for you and for others.

This manual provides Safety Symbols. When the user fails to adhere to the following requirement, it may cause death, serious injury, and substantial property damage.

For safety symbols, 'DANGER', 'WARNING', 'CAUTION' are indicated and the definitions for these terms are as follow:

⚠ DANGER

Indicates an imminently hazardous situation which, if not avoided, will result in death or serious injury. This signal word is limited to the most extreme situations.

⚠ WARNING

Indicates a potentially hazardous situation which, if not avoided, could result in death or serious injury.

⚠ CAUTION

Indicates a potentially hazardous situation which, if not avoided, may result in minor or moderate injury. It is also used to alert against unsafe practices and hazards involving only property damage.

⚠ WARNING

Cancer and Reproductive Harm.
www.P65WARNINGS.CA.GOV. as required by the state of California Proposition 65.

⚠ WARNING

FOR YOUR SAFETY READ BEFORE OPERATING

If you do not follow these instructions exactly, a fire or explosion could result causing property damage, personal injury or loss of life.

A. This appliance does not have a pilot. It is equipped with an ignition device which automatically lights the burner. Do not try to light the burner by hand.

B. BEFORE OPERATING smell all around the appliance area for gas. Be sure to smell next to the floor because some gas is heavier than air and will settle on the floor.

WHAT TO DO IF YOU SMELL GAS

- Do not try to light any appliance.
- Do not touch any electric switch; do not use any phone in your building.
- Immediately call your gas supplier from a neighbor's phone. Follow the gas supplier's instructions.
- If you cannot reach your gas supplier, call the fire department.

C. Use only your hand to push in or turn the gas control knob. Never use tools. If the knob will not push in or turn by hand, don't try to repair it, call a qualified service technician. Force or attempted repair may result in a fire or explosion.

D. Do not use this appliance if any part has been under water. Immediately call a qualified service technician to inspect the appliance and to replace any part of the control system and any gas control which has been under water.

This appliance must be installed in accordance with local codes if any; if not, follow ANSI Z223.1/NFPA 54 or in Canada, CSA B149.1, Natural Gas and Propane Installation Code, as applicable.

If installed in a manufactured home, the installation must conform with the Manufactured Home Construction and Safety Standard, Title 24 CFR, Part 3280 and/or in Canada, confirm to the requirements in CSA Z240 MH Series, CSA Z240 RV Series, and CSA B149.1 Nat Gas and Propane Installation Code.

- This appliance is certified for use at altitudes up to 2,000 ft (609m) without adjusting Altitude settings, accordance to the latest Canadian Standard “CSA 2.17” Gas-Fired Appliances for Use at High Altitudes. Refer to Section 4.13 for High Altitude Settings, if installing above 2,000 ft (609m) up to a maximum of 10,000 ft (3,044m).

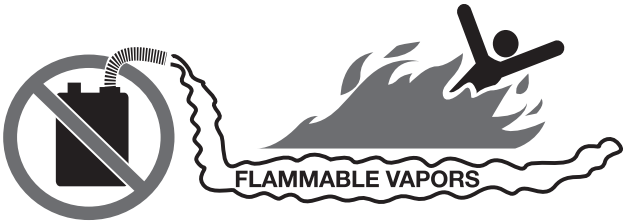

⚠ DANGER

- Vapors from flammable liquids will explode and catch on fire. These will cause death or severe burns.

Do not use or store flammable products such as gasoline, solvents or adhesives in the same room or area near the appliance.

Keep flammable products

- Far away from water heater
- In approved containers
- Tightly closed
- Out of children’s reach

Vapors

- Cannot be seen
- are heavier than air
- spread on the floor
- Can spread from other rooms to the main burner by air currents

Do not install the appliance where flammable products will be stored.
Read and follow water heater warnings and instructions thoroughly. If owner’s manual is missing, contact the retailer or manufacturer.

- The water heater must be installed by a qualified plumber, a licensed gas fitter, and/or a professional service technician.
  Improper installation and/or operation will cause a potentially hazardous situation, such as serious injury or death. Also, it will void the warranty.
  - The National Fuel Gas Code NFPA 54 / ANSI Z223.1
  - National Electric Code ANSI/NEPA 70
  - All applicable local, state, national and provincial codes, regulations and laws.

- Proper care is your responsibility. Carefully read and understand the Operating Information in this manual before operating the water heater.

- Be aware of the location of the gas shut-off valve and operation method. Close the gas shut-off valve immediately if the appliance is subjected to fire, overheating, flood, physical damage, or any other damaging condition that might affect the operation of the unit. Water Heater must be checked by a qualified technician before resuming operation.

- DO NOT use this Water Heater if any part has been under water. Immediately call a qualified technician for inspecting the Water Heater and replacing any part of the control system and gas control which have been under water.

- DO NOT power up the unit until the gas and water supply valves are fully opened. Make sure that the fresh air intake port and exhaust gas port are opened and functional.

- DO NOT attempt to install, repair, or service this Water Heater by yourself.
  Do not change any part of the Water heater.
  Contact a qualified technician if the Water Heater needs repair or maintenance.
  Ask your gas supplier for a list of qualified service providers.

- DO NOT use spray paint, hair spray, or any other flammable spray near Water Heater or near the exterior fresh air inlet port. DO NOT place any items in or around the exterior exhaust gas outlet port and/or fresh air inlet port. These could restrict or block the flow in or out of the vent system.

- Caution: While repairing control, all wires are labeled. You must connect the wires in accordance with the instruction.
  Wiring errors can cause improper and dangerous operation.

- Verify proper operation after servicing operation.

- This consists of the gas ignition system components which are protected from water (dripping, spraying, rain, etc.) during operation and service (circulator replacement, condensate trap, control replacement, etc.).

- After installing the heater, safety device must be tested.

3.2 Safety Precautions and Proper Use

Before Operation

1. Check the Gas Type (NG/LP)

When moving the unit or setting it up for the first time, confirm that the supplied gas type (natural gas or propane) matches the configuration of the water heater. The gas type of the water heater is indicated on the rating plate found on its side. If gas conversion is required, refer to section 4.10.1 Gas Conversion for details.

2. Check the Power (120V 60Hz)

Check that the appliance is connected properly.

3. Check the Cold Water Inlet valve. Please keep the appliance water inlet valve open at all times. The appliance will not ignite when insufficient water or no water is in the heating pipes.

4. Check the Gas Valve

Check that the manual gas shut-off valve that supplies the water heater is opened.

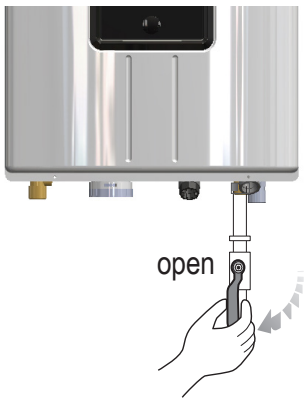

5. Check for a gas leak at the gas connection with soapy water.

6. Check the area around the appliance and remove any combustible or flammable material per the installation manual. Remove laundry or any other items that are on or near the water heater or exhaust vent.

7. Check Combustion Air.
Check the combustion air vent system and ensure it is installed per the installation manual.

When in Operation ⚠ CAUTION

1. Caution for Ventilation

Ensure that there is unobstructed and sufficient inflow and outflow combustion air for the water heater.
If the ventilation is improper, combustion quality may deteriorate inside the appliance and cause shortened life of the appliance.

⚠ WARNING

Do not use the appliance for any other purpose than for domestic water heating.
Do not store combustibles or flammable material such as gasoline near the appliance.
Do not store other items on or near this water heater.
Do not store combustible (flammable) materials such as papers.
Do not hang clothes on the exhaust stack. This may start a fire.

⚠ CAUTION

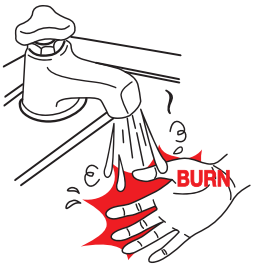

Scalding Risk: The use of an anti-scald mixing valve at the hot water outlet (water heater location) can reduce potential for scalding.
The maximum hot water supply temperature at Point-of-Distribution and/or Point-of-Use, anti-scald device/ thermostatic mixing valve at plumbing fixture or integral to the bathroom fixtures are dictated by the Plumbing Code and Health & Safety Code. Comply with all local codes.

⚠ DANGER

Carbon Monoxide Poisoning.

- Exhaust gas must be vented to the outside using approved vent material. See section 4.4 Exhaust venting for proper approved vent materials and practices. Vent and combustion air piping must be sealed gas-tight to prevent flue gas spillage, carbon monoxide emissions resulting in personal injury or death.

⚠ DANGER

- If you detect a gas leak, shut off the gas and ventilate the room(open windows, doors). Tighten appropriate fittings to stop leak. Turn the gas on and check again with a gas leak detection solution. Never test for gas leaks using a match or flame.

Gas leakage test.
Gas supply line must be inspected periodically.

Do not disconnect main power to the water heater.
When you leave home for a extended periods, do not shut off the water heater. The water heater has a freeze protection function. If the heater detects the water temperature drop, freeze protection will begin by running an internal recirculation operation, only when the unit is supplied with power and gas.

Do not wipe the appliance or display panel with wet cloth, or internal parts may fail due to the exposure to moisture.

Do not disassemble the water heater.
If repair is required, call your local qualified technician.

SECTION 4 Installation

4.1 Location and Clearances

The water heater must be mounted to a suitable wall by a qualified heating contractor per the provided instructions.

The wall may be of concrete or wood. Suitable fasteners for concrete or wood must be used. Failure to wall mount this water heater using correct fasteners will affect the performance and life expectancy of the water heater and will void the warranty.

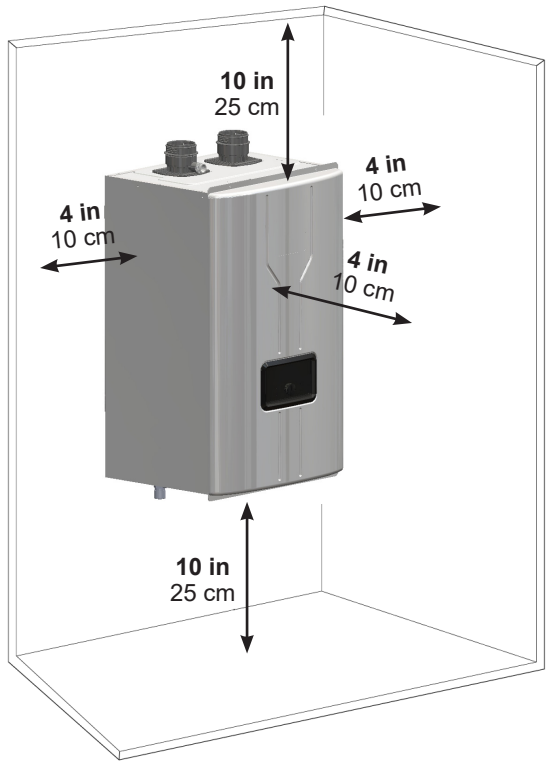

Minimum clearances to Combustibles.

For installation from Non-Combustibles and Combustibles		Suggested Service Clearance
TOP	10 in (25 cm)	18 in (46 cm)
BACK	3/4 in (1.9 cm)	3/4 in (1.9 cm)
FRONT	4 in (10 cm)	40 in (101 cm)
SIDE	4 in (10 cm)	8 in (20 cm)
BOTTOM	10 in (25 cm)	24 in (61 cm)

Table 1. Minimum Clearances to Combustibles and for Service.

- When pipe cover is installed, minimum clearance from the ground to the bottom of the pipe cover is 1 inch

⚠ WARNING

- Installations must comply with
  - All the local, state, provincial, and national codes, laws, regulations and ordinances.
  - National Fuel Gas Code, ANSI Z223.1 – The latest version.
  - National Electrical Code.
  - In Canada, refer to the latest edition of CSA B149.1, Natural Gas and Propane Installation Code; and CSA 22.1 Part 1 Electrical Code.
- Check before placing the Water Heater
  - Always check the connected components which are near to the heater. The components are below.
- Water piping position / Venting adapter / Gas supply piping / Electrical power / Condensate drain hose.
  - Confirm the area around Water Heater. Remove any combustible materials, gasoline and other flammable liquids. Failure to keep the Water Heater area clear and free of combustible materials, gasoline and other flammable liquids and vapors can result in severe personal injury, death or substantial property damage.
  - The Water Heater which has gas control system components must be protected from any possible danger during operation and service.
  - If new Water Heater replaces the existing appliance, check and correct system problems.
- Provide clearances as outlined in Table 1
  - As for vent connector and hot water pipe from combustible construction, please consult with a qualified technician.
  - If the heater was installed in a narrow space or corner, please ensure that there is sufficient space for service and maintenance access. For regular maintenance, there should not be any problem to approach gas and water line.
- The water heater must be installed on a wall that can bear its weight.

⚠ WARNING

- CLEARANCES **FOR SERVICE ACCESS**
  - The water heater must be installed on a wall that can bear its weight.
  - Adequate service clearance must be considered.
  - The Water heater can be installed on any suitable internal wall (sound proofing may be required when installing onto a stud partition wall).

4.2 Wall Mount Bracket

4.2.1 The installation height and location

The installation height depends on your installation scenario. With all clearances considered, and given adequate positioning for air supply and venting, you will need to determine the best position to mount the Wall Mount Bracket. The wall must be concrete, wood, or plywood over studs, and must be strong enough to hold the water heater!

- Start by familiarizing yourself to how the included Wall Mount Bracket hooks underneath the two Hangers that are attached to the back of the water heater. The 'hooks' of the Wall Mount Bracket will be **3"** from the Top of the water heater once the water heater is hung.
- Position the Wall Mount Bracket at the desired location, ensuring that it is level. Drill 4 holes with a 1/2" drill bit, into the wall through the Bracket.
- If mounting to a concrete wall, then use the concrete anchors. If onto wood or 5/8" (16 mm) plywood, then use the wood screws. Do not hang the water heater onto Unsupported Sheetrock unless it is possible to fasten directly into the structural studs. If the included anchors do not suit your installation, you must use 'Field Supplied' anchors that are appropriate for the wall's construction.

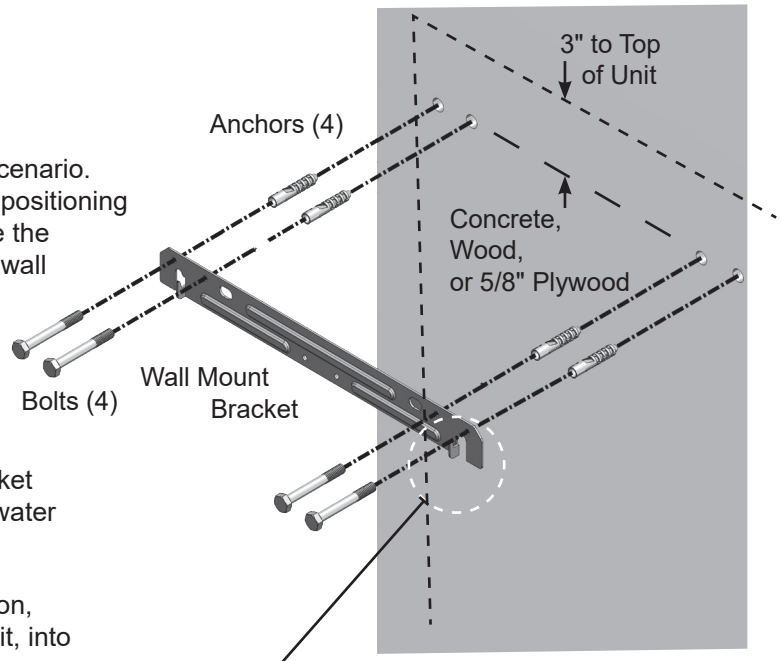

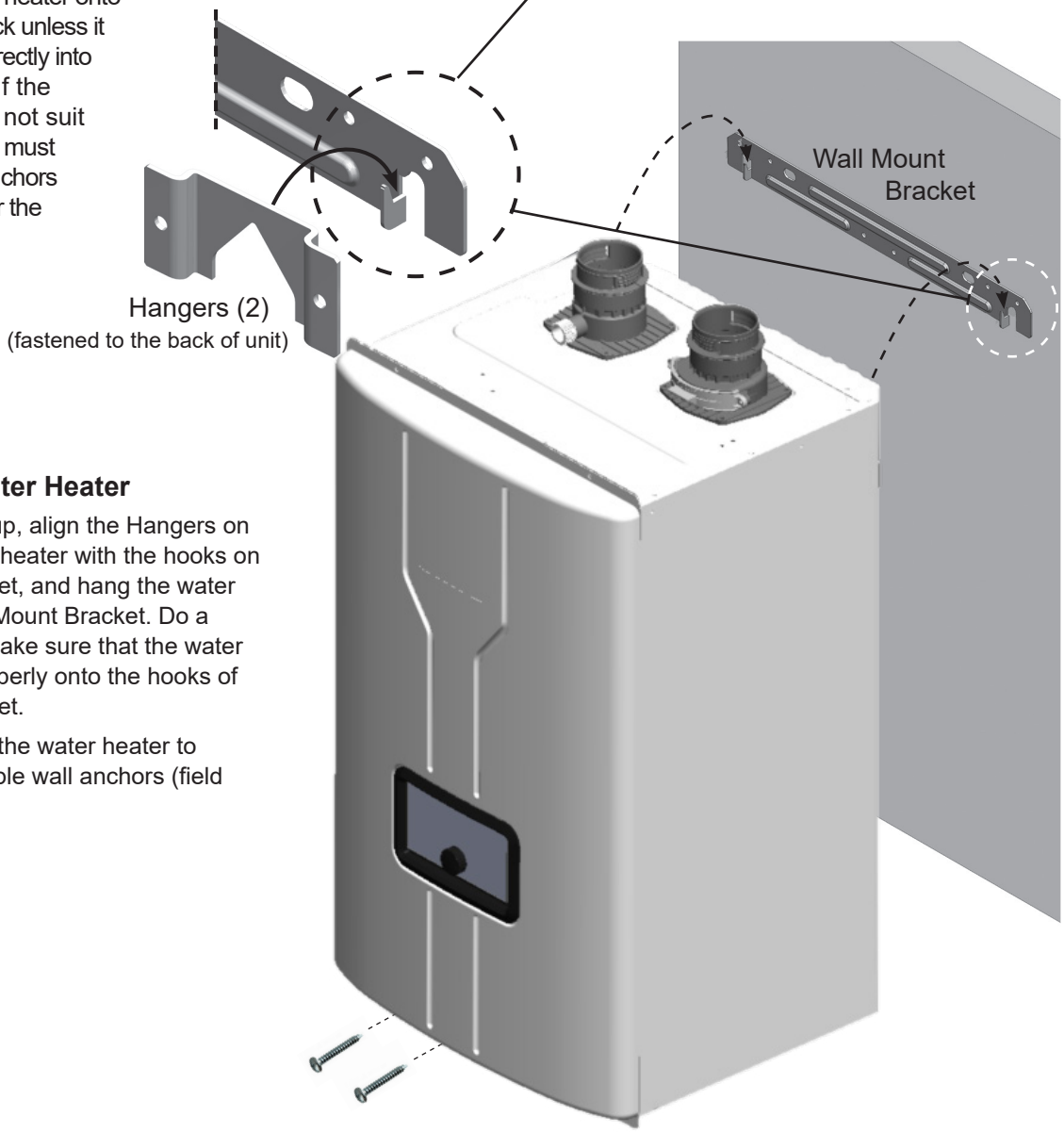

4.2.2 Hang the Water Heater

- Lift the water heater up, align the Hangers on the back of the water heater with the hooks on the Wall Mount Bracket, and hang the water heater onto the Wall Mount Bracket. Do a visual inspection to make sure that the water heater is hanging properly onto the hooks of the Wall Mount Bracket.
- Fasten the bottom of the water heater to the wall using 2 suitable wall anchors (field supplied).

SECTION 4. Installation (continued)

4.3 Combustion Air

GR Series water heaters must have provisions for combustion and ventilation air in accordance with the applicable requirements for Combustion Air Supply and Ventilation in the National Fuel Gas Code, ANSI Z223 1; or in Canada, the Natural Gas and Propane Installation Code, CSA B149.1. All applicable provisions of local building codes must also be adhered to.

An GR Series unit can take combustion air from the space in which it is installed, or the combustion air can be ducted directly to the unit. Ventilation air must be provided in either case.

4.3.1 Combustion Air from Room

In the United States, the most common requirements specify that the space shall communicate with the outdoors in accordance with method 1 or 2, which follow. Where ducts are used, they shall be of the same cross-sectional area as the free area of the openings to which they connect.

Method 1: Two permanent openings, one commencing within 12" (300mm) of the top and one commencing within 12" (300mm) of the bottom, of the enclosure shall be provided. The openings shall communicate directly, or by ducts, with the outdoors or spaces that freely communicate with the outdoors. When directly communicating with the outdoors, or when communicating to the outdoors through vertical ducts, each opening shall have a minimum free area of 1 square inch per 4,000 Btu/hr (550 square mm/kW) of total input rating of all equipment in the enclosure. When communicating to the outdoors through horizontal ducts, each opening shall have a minimum free area of not less than 1 square inch per 2000 Btu/hr (1,100 square mm/kW) of total input rating of all equipment in the enclosure.

Method 2: One permanent opening, commencing within 12" (300mm) of the top of the enclosure, shall be permitted. The opening shall directly communicate with the outdoors or shall communicate through a vertical or horizontal duct to the outdoors or spaces that directly communicate with the outdoors and shall have a minimum free area of 1 square inch per 3,000 Btu/hr (734 square mm/kW) of the total input rating of all equipment located in the enclosure. This opening must not be less than the sum of the areas of all vent connectors in the confined space.

Other methods of introducing combustion and ventilation air are acceptable, providing they conform to the requirements in the applicable codes listed above.

In Canada, consult local building and safety codes or, in absence of such requirements, follow CSA B149.1, Natural Gas and Propane Installation Code, latest edition.

4.3.2 Ducted Combustion Air

The combustion air can be taken through the wall, or through the roof. When taken from the wall, it must be taken from out-of-doors by means of the horizontal wall terminal. When taken from the roof, a field-supplied rain cap or an elbow arrangement must be used to prevent entry of rain water.

As allowed by local codes use ABS, PVC, CPVC, Polypropylene for the Combustion air intake. Route the intake to the water heater as directly as possible. Seal all joints. Provide adequate hangers. The unit must not support the weight of the combustion air intake pipe. Maximum linear pipe length allowed is shown in Section 4.7.1 Vent/ Air Pipe Lengths, Table-6 Maximum Vent / Air Pipe Lengths for either 3" or 2" Pipes.

Subtract 5 allowable linear ft. (1.5m) for every 3" elbow or 8 allowable ft (2.4m) for every 2" elbow used.

The connection for the intake air pipe is at the top of the unit.

In addition to air needed for combustion, air shall also be supplied for ventilation, including air required for comfort and proper working conditions for personnel.

COMBUSTION AIR INSTALLATION STANDARDS

MATERIAL	UNITED STATES/CANADA
Schedule 40 ABS*	ANSI/ASTM D2661
Schedule 40 PVC* / PVC-DWV*	ANSI/ASTM D1785 or D2665
Schedule 40 CPVC* Polypropylene*	ANSI/ASTM F441 UL1738, ULC S636.

Table 2. Required Combustion Air Pipe Material.

*Check local codes for exceptions to allowable combustion air intake materials

⚠ NOTICE

The instructions for the installation of the venting system shall specify that the horizontal portions of the venting system shall be supported to prevent sagging; the methods of and intervals for support shall be specified. These instructions shall also specify that the venting system:

Category IV water heaters must be installed so that horizontal sections have a slope of at least ¼ inch per foot (21mm/m) to the appliance to prevent accumulation of condensate; and
For Category IV water heaters, where necessary, have means provided for drainage of condensate.

⚠ CAUTION

■ The GR Series comes from the factory set to use either Natural gas or Liquid Propane. Confirm the installation gas type matches the gas type on the rating plate.

■ Adequate drainage

- The appliance should be installed not to damage the adjacent area. If such locations cannot be avoided, it is recommended that a suitable drain pan, adequately drained, be installed under the appliance. The pan must not block combustion air flow.

■ Connecting the Water Supply

- To conserve water and energy, insulate all water piping—especially the hot and recirculation water lines. Never cover the drain or pressure relief valve.
  Having a backflow preventer in the cold water supply line means that it prevent from thermal expansion backflow. Contact the water supplier or local plumbing inspector for information about how to control this situation. If overheating occurs or the gas supply fails to shut off, turn off the manual gas valve and check the installation.

■ This installation must conform with below section

- "Air for Combustion and Ventilation" of the National Fuel Gas Code, ANSI Z223.1/NFPA 54, or in Canada, refer to the Natural Gas and Propane Installation Code, CSA B149.1, or applicable provisions of the local building codes.

⚠ AVIS

Les instructions d'installation du système d'évacuation doivent préciser que les sections horizontales doivent être supportées pour prévenir le fléchissement. Les méthodes et les intervalles de support doivent être spécifiés. Les instructions doivent aussi indiquer les renseignements suivants:

les chaudières de catégories IV doivent présenter des tronçons horizontaux dont la pente montante est d'au moins ¼ po par pied (21 mm/m) entre la chaudière et l'évent; les chaudières de catégories IV doivent être installées de façon à empêcher l'accumulation de condensat;

et si nécessaire, les chaudières de catégories II et IV doivent être pourvues de dispositifs d'évacuation du condensat.

4.4 Venting (Exhaust)

The flue temperature of the water heater changes dramatically with changes in operating water temperature. If the water heater is installed in an application where the set point is greater than 140°F(60°C), ambient temperature is elevated, and/or installed in a closet/alcove, CPVC, polypropylene, or stainless steel material is required. If the system temperatures are unknown at the time of installation, stainless, polypropylene or CPVC material is recommended.

When using 2 in. vent, if the exhaust temperature exceeds 149°F(65°C), CPVC pipe or pipe rated 194°F (90°C) or higher must be used for the first 3 feet of equivalent pipe length. For systems using 3 in. vent, the first 3 feet of length must be CPVC or pipe rated 194°F (90°C) or higher.

The GR Series is a Category IV appliance and may be installed with PVC, CPVC, Polypropylene or Stainless Steel that complies with ULC-S636, ANSI/ASTM D1785 F441 (see Table 3) or a PVC or stainless steel venting system that complies with UL 1738.

Consult with the Authority Having Jurisdiction (AHJ), and all applicable Local, State, National, and Provincial Codes, Regulation, and Bylaws. Allowable materials for venting and Vent System Certification requirements varies with the jurisdiction of the installation.

Consult with the vent material manufacturer for suitability of their product for flue gas venting, temperature limitation, and installation requirements.

INSTALLATIONS IN CANADA require the use of venting material certified to ULCS636. All Gas

vents connected to the water heater, plastic, stainless steel or otherwise must be certified to this ULC standard. Appropriate selection of vent material is very important for proper performance and safe operation of the water heater.

The flue temperature of the water heater changes dramatically with changes in operating water temperature. Therefore, it is necessary to assess the application of the water heater to determine the required certified vent class. If the water heater is installed in an application where the outlet water temperature exceeds 140°F (60°C), and/or installed in a closet, ULC-S636 Class IIB or higher vent material is required. If the system temperatures are unknown at the time of installation, class IIB or higher venting material is recommended.

IN CANADA all venting used must meet the following requirements:

1. **ULC-S636 certified and marked with the appropriate Class and maximum flue gas temperature.**
   (i) Class IIa, up to and including 65°C (149°F).
   (ii) Class IIb, up to and including 90°C (194°F).
2. **The first 3 feet of venting must be accessible for visual inspection.**
3. **All components used in the vent system must be from a certified manufacturer.**
4. **Vent system components must not be mixed with alternate manufacturers certified components and/or unlisted components.**
5. **The venting must be installed according to the vent manufacturers installation instructions.**

The unit's vent can terminate through the roof, or through an outside wall.

Vent pipe must pitch upward, toward the vent terminal, not less than 1/4" per foot, so that condensate will run back to the water heater to drain. Route vent pipe to the heater as directly as possible. Seal all joints and provide adequate hangers as required in the venting system manufacturer's Installation Instructions. Horizontal portions of the venting system must be supported to prevent sagging and may not have any low sections that could trap condensate. The unit must not support the weight of the vent pipe.

⚠ WARNING

Use of cellular core PVC (ASTM F891), cellular core CPVC, or Radel® (polyphenolsulfone) in venting systems shall be prohibited.

⚠ WARNING

Failure to use the appropriate vent material, installation techniques, glues/sealants could lead to vent failure causing property damage, personal injury or death.

⚠ WARNING

All venting must be installed according to this manual and any other applicable local codes, including but not lim ited to, ANSI Z223.1/NFPA 54, CSA B149.1 and ULC-S636. Failure to follow this manual and applicable codes may lead to property damage, severe injury, or death.

⚠ NOTICE

DO NOT COMMON VENT GR UNITS WITH ANY OTHER APPLIANCE. GR Series units are never permitted to share a vent with Category I appliances.

⚠ AVIS

NE PAS METTRE EN COMMUN LES UNITÉS GR AVEC UN AUTRE APPAREIL. GR Series unités ne sont jamais autorisés à partager un évent Catégorie I avec les appareils.

VENTING INSTALLATION STANDARDS

MATERIAL	UNITED STATES	CANADA
PVC, sch 40	ANSI/ASTM D1785	Venting must be ULC-S636 certified for use with the appropriate CLASS (IIA, IIB) or higher based on the maximum flue gas temperature. The venting material must be chosen based upon the intended application of the water heater.
CPVC, sch 40	ANSI/ASTM F441	
Polypropylene	UL1738 or ULC-S636	
Stainless Steel AL29-4C	Certified for Category IV and direct vent appliance venting	

Table 3. Required Exhaust Vent Material.

4.4.1 Selecting Vent Pipe

1. Polypropylene vent

The following polypropylene vent components are approved for use with this appliance:

- Duravent PolyPro® SW (Rigid) and PolyPro Flex (Flexible) (Certified to ULCS636)
  - 2PPS-xxx (2") or 3PPS-xxx (3")
- Centrotherm Innoflue® SW (Rigid) and Innoflue Flex (Flexible) (Certified to UL1738 and ULCS636)
  - ISxx02xx (2") or ISxx03xx (3")
- Z-Flex® Z-DENS SW (Rigid) and Z-DENS Flexible (Certified to UL1738 and ULCS636)
  - 2ZDxx (2") or 3ZDxx (3")

2. Stainless steel vent

The following stainless steel vent components are approved for use with this appliance:

- Duravent FasNSeal® (Rigid) (Certified to UL1738 and ULCS636)
  - FSA-PVC3 (3" PVC to FasNSeal Appliance Adapter)
  - FSxxxxx03 (3")
- Z-Flex® Z Vent
  - 2SVSTTA023 (2" x 3" Appliance Adapter)
  - 2SVEPSCF030X (Straight Pipe)
  - 2SVEEWCF0390 (90° Elbow)
  - 2SVEEWCF0345 (45° Elbow)

3. Vent termination kit

The following PVC vent terminations are approved for use with this appliance

- IPEX (Certified to ULCS636)
  - 2 in FGV Concentric Kit #196105
  - 3 in FGV Concentric Kit #196106
- IPEX (Certified to UL1738)
  - 2 in FGV Concentric Kit #397105
  - 3 in FGV Concentric Kit #397106
- IPEX Low Profile Termination Kit (Certified to ULCS636)
  - 2 in Low Profile Vent Kit #196984
  - 3 in Low Profile Vent Kit #196985
- IPEX Low Profile Termination Kit (Certified to UL1738)
  - 2 in Low Profile Vent Kit #397984
  - 3 in Low Profile Vent Kit #397985
- Royal Plumbing Solution
  - 2" GVS-65 Concentric Vent Termination Kit #52CVKGCS6502
  - 3" GVS-65 Concentric Vent Termination Kit #52CVKGCS6503
  - GVS-65 Side Wall Vent Termination Kit #52SWVKGVS6502(2”)

The following polypropylene vent terminations are approved for use:

- Duravent PolyPro® Horizontal Concentric Termination Kit (Certified to ULCS636)
  - 2 in x 4 in Concentric Vent Kit #2PPS-HKC
  - 3 in x 5 in Concentric Vent Kit #3PPS-HKC
- Centrotherm Innoflue® Low Profile Termination Kit (Certified to UL1738 and ULCS636)
  - 2 in Vent Kit #ISLPT0202
  - 3 in Vent Kit #ISLPT0303
- Centrotherm Concentric Vent Kit (Certified to UL1738 and ULCS636)
  - 2 in Vent Kit #ICWT242
  - 3 in Vent Kit #ICWT352
- Z-Flex® Z DENS Horizontal Termination (Certified to UL1738 and ULCS636)
  - 2 in Vent Kit #2ZDHK2
  - 3 in Vent Kit #2ZDHK3
- Ecco Manufacturing (Certified to ULCS636)
  - 2" PP Concentric Terminations Horizontal (Wall) Terminations #190288
  - 3" PP Concentric Terminations Horizontal (Wall) Terminations #190388

The following polypropylene vent components can be used as terminations:

- Duravent PolyPro® (Certified to ULCS636))
  - 2PPS-E90L or 3PPS-E90L (2" or 3" 90° Elbow)
  - 2PPS-E45L or 3PPS-E45L (2" or 3" 45° Elbow)
  - 2PPS-TL or 3PPS-TL (2" or 3" Tee)
  - 2PPS-BG or 3PPS-BG (2" or 3" Birdscreen)
- Centrotherm Innoflue® (Certified to UL1738 and ULCS636)
  - ISELL0287 or ISELL0387 (2" or 3" 87° Elbow)
  - ISELL0245 or ISELL0345 (2" or 3" 45° Elbow)
  - IST02 or IST03 (2" or 3" Tee)
  - IASPP02 or IASPP03 (2" or 3" Birdscreen)

- Z-Flex® Z-DENS (Certified to UL1738 and ULCS636)
  - 2ZDE_87 or 3ZDE_87 (2" or 3" 87° Elbow)
  - 2ZDE_45 or 3ZDE_45 (2" or 3" 45° Elbow)
  - 2ZDTT or 3ZDTT (2" or 3" Tee)
  - 2ZDES or 3ZDES (2" or 3" Birdscreen)

The following stainless steel (AL29-4C) vent components can be used as terminations:

- Duravent FasNSeal® (Certified to UL1738 and ULCS636)
  - FSELB9003 (3" 90° Elbow)
  - FSELB8803 (3" 88° Elbow)
  - FSELB4503 (3" 45° Elbow)
  - FST3 (3" Tee)
  - FSBS3 (3" Birdscreen)
- Z-Flex® Z Vent (Certified to UL1738 and ULCS636)
  - 2SVEEWCF0390 (90° Elbow)
  - 2SVEEWCF0345 (45° Elbow)
  - 2SVSTTF03 (3" Tee)

4.5 General Location Guideline

1. Vent system installation must be in accordance with Local codes or, in the absence of local codes, the National Fuel Gas Code, ANSI Z223.1 /NFPA 54 and/or in Canada, CSA B149.1, Natural Gas and Propane Installation Code.

2. The Water Heater is designed to be installed as a Direct Vent (sealed combustion) type.
   Be careful to avoid entering foreign substances into the combustion air. Also, the flue gases must be vented directly to the outdoors (through wall or roof).

3. Do not install venting system components on the exterior of building except as specifically required by these instructions

   - Vent terminals must be at least 1 foot from any door, window, or gravity inlet into the building.

   - Maintain the correct clearance and orientation between the vent and air intake terminals.
     If the vent and air intake terminals must be at the same height, their center lines must be spaced apart 12" minimum.

   - The bottom of the vent and air intake terminal must be at least 12" above the normal snow line. In no case should they be less than 12" above grade level.

   - Do not install the vent terminal directly over windows or doors.

   - Air intake terminal must not terminate in areas that might contain combustion air contaminates, such as near swimming pools.

   - For sidewall venting, the minimum horizontal distance between any adjacent individual Module (Water Heater) vent terminations is twelve (12) inches. It is better to be far more than 12 inches for avoiding frost damage to building surfaces where vent terminations are placed.

   - The minimum horizontal distance between any adjacent individual module (water heater) roof vent end piece is one (1) foot.ww

⚠ WARNING

- Failure to vent this Water Heater in accordance with these instructions could cause a fire, resulting in severe property damage, personal injury or death.
- Do not interchange vent systems or materials unless it is specified.
- The use of thermal insulation covering vent pipe and fittings is prohibited.
- Do not apply an electric damper, draft hood or vent damper with this Water Heater.
- Do not locate vent termination where exposed to prevailing winds. Moisture and ice may fall on surface around vent termination. To prevent deterioration, surface must be in good repair (sealed, painted, etc.).

4.6 Locations for Vent Pipe Termination

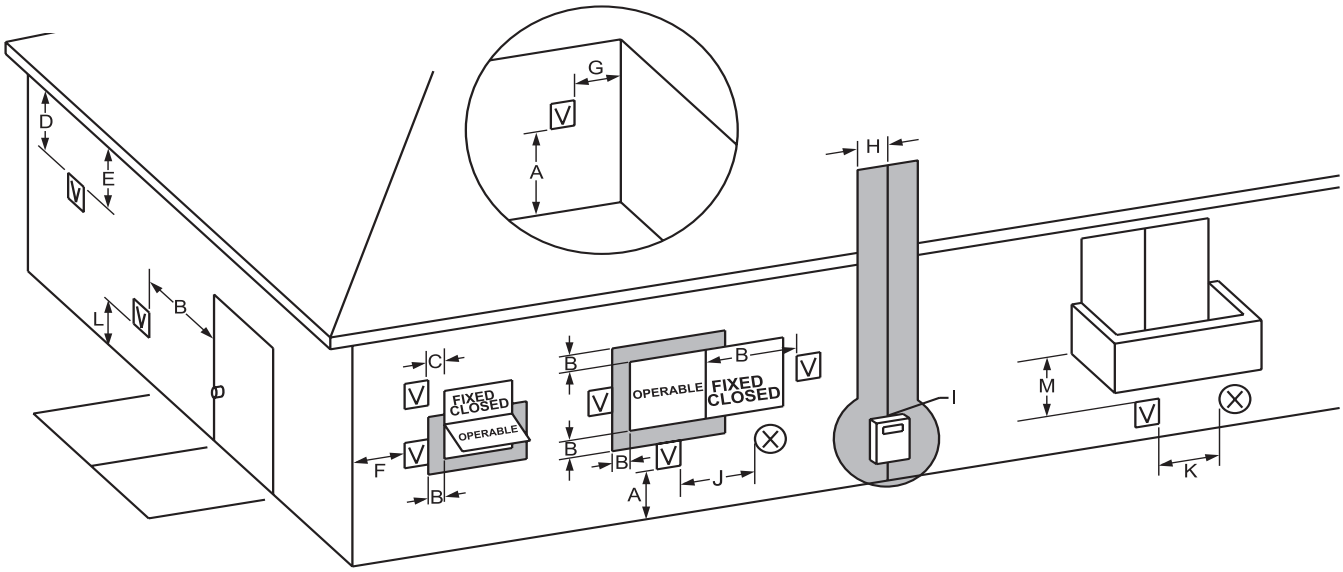

V VENT TERMINAL X AIR SUPPLY INLET AREA WHERE TERMINAL IS NOT PERMITTED

4.6.1 Direct Venting Clearances

		U.S. Installations (see note 1)	Canadian Installations (see note 2)
A=	Clearance above grade, veranda, porch, deck, or balcony	12 inches (30 cm) See note 6	12 inches (30 cm) See note 6
B=	Clearance to window or door that may be opened	Direct vent only: 12 inches (30cm); Other than Direct vent: 4 ft (1.2m) below or to side of opening; 1 ft (30cm) above opening	36 inches (91 cm)
C=	Clearance to permanently closed window	See note 4	See note 5
D=	Vertical clearance to ventilated soffit located above the terminal within a horizontal distance of 2 feet (61cm) from the center line of the terminal	See note 4	See note 5
E=	Clearance to unventilated soffit	See note 4	See note 5
F=	Clearance to outside corner	See note 4	See note 5
G=	Clearance to inside corner	See note 4	See note 5
H=	Clearance to each side of center line extended above meter/regulator assembly	See note 4	3 feet (91 cm) within a height 15 feet above the meter / regulator assembly
I=	Clearance to service regulator vent outlet	See note 4	3 feet (91 cm)
J=	Clearance to nonmechanical air supply inlet to building or the combustion air inlet to any other appliance	Direct vent only: 12" (30cm). Other than Direct vent: 4 ft (1.2m) below or to side of opening; 1 ft (30cm) above opening	36 inches (91 cm)
K=	Clearance to a mechanical air supply inlet	3 feet (91 cm) above if within 10 feet (3 m) horizontally	6 feet (1.83 m)
L=	Clearance above paved sidewalk or paved driveway located on public property	Vent termination not allowed in this location for category IV appliances.	7 ft (2.1 m)
M=	Clearance under veranda, porch, deck, or balcony	See note 4	12 inches (30 cm) between top of the vent termination. (see note 3)

Notes:

1. In accordance with the current ANSI Z223.1 / NFPA 54 National Fuel Gas Code.
2. In accordance with the current CSA-B149.1 Installation Codes.
3. Permitted only if veranda, porch, deck, or balcony is fully open on a minimum of two sides beneath the floor.
4. For clearances not specified in ANSI Z223.1 / NFPA 54, clearance is in accordance with local installation codes and the requirements of the gas supplier.
5. For clearances not specified in CSA-B149, clearance is in accordance with local installation codes and the requirements of the authority having jurisdiction.
6. IMPORTANT: Terminal must be placed such that it remains a minimum 12” above expected snow line. Local codes may have more specific requirements, and must be consulted.

Table 4. Direct Vent Clearances

4.6.2 Non-Direct Venting (Single Pipe) Clearances

	Description	US Non-Direct	Canadian Non-Direct
A	Clearance above grade, veranda, porch, deck, or balcony	12 in (30 cm)	12 in (30 cm)
B	Clearance to window or door that may be opening	48 in (120 cm) below or to side of opening; 12 in (30 cm) above opening	36 in (91 cm)
C	Clearance to permanently closed window	See note 1	See note 2
D	Vertical clearance to ventilated soffit located above the terminal within in horizontal distance of 2 feet from the center line of the terminal	See note 1	See note 2
E	Clearance to unventilated soffit	See note 1	See note 2
F	Clearance to outside corner	See note 1	See note 2
G	Clearance to inside corner	See note 1	See note 2
H	Clearance to each side of center line extended above meter / regulator assembly	See note 1	36 in (91 cm) within a height 15 ft (4.57 m) above the meter/ regulator assembly
I	Clearance to service regulator vent outlet	See note 1	36 in (91 cm)
J	Clearance to non-mechanical air supply inlet to building or the combustion air inlet to any other appliance	48 in (120 cm) below or to side of opening; 12 in (30 cm) above opening	36 in (91 cm)
K	Clearance to a mechanical air supply inlet	36 in (91 cm) above if within 10 ft (3 m) horizontally	6 ft (1.83 m)
L	Clearance above paved sidewalk or paved driveway located on public property	Not allowed	7 ft (2.13 m)
M	Clearance under veranda, porch, deck, or balcony	See note 1	12 in (30 cm)

Notes:

1. For clearances not specified in ANSI Z223.1 / NFPA 54, clearance is in accordance with local installation codes and the requirements of the gas supplier
2. For clearances not specified in CSA-B149, clearance is in accordance with local installation codes and the requirements of the Authority having jurisdiction.

Table 5. Non-Direct Vent Clearances

4.6.3 Venting Requirements in the Commonwealth of Massachusetts

In Massachusetts the following items are required if the side-wall exhaust vent termination is less than seven (7) feet above finished grade in the area of the venting, including but not limited to decks and porches. From Massachusetts Rules and regulations 248 CMR 5.08

1.Installation of Carbon Monoxide Detectors

At the time of installation of the side wall vented gas fueled appliance, the installing plumber or gasfitter shall observe that a hard-wired carbon monoxide detector with an alarm battery back-up is installed on the floor level where the gas appliance is to be installed. In addition, the installing plumber or gasfitter shall observe that a battery operated or hard-wired carbon monoxide detector with an alarm is installed on each additional level of the dwelling, building or structure served by the side-wall horizontally vented gas fueled equipment. It shall be the responsibility of the property owner to secure the services of qualified licensed professionals for installation of hard-wired carbon monoxide detectors.

a. In the event that the side-wall horizontally vented gas fueled equipment is installed in a crawl space or an attic, the hard-wired carbon monoxide with alarm and battery back-up may be installed on the next adjacent floor level.

b. In the event that the requirements of the subdivision cannot be met at the time of completion of installation, the owner shall have a period of thirty (30) days to comply with the above requirements, provided, however, that during said thirty (30) day period, a battery operated carbon monoxide detector with an alarm be installed.

2. Approved Carbon Monoxide Detectors

Each carbon monoxide detector shall comply with NFPA 720 and be ANSI/UL 2034 listed and IAS certified.

3. Signage. A metal or plastic identification plate shall be permanently mounted to the exterior of the building at a minimum height of eight (8) feet above grade directly in line with the exhaust vent terminal for horizontally vented gas fueled heating appliance or equipment. The sign shall read, in print no less than one-half (1/2) inch in size: "GAS VENT DIRECTLY BELOW, KEEP CLEAR OF ALL OBSTRUCTIONS".

4. Inspection The state or local gas inspector of the side-wall horizontally vented gas fueled appliance shall not approve the installation unless, upon inspection, the inspector observes carbon monoxide detectors and signage installed in accordance with the provisions of 248 CMR 5.08(2)(a) 1-4.

⚠ NOTICE

DO NOT COMMON VENT GS/GR UNITS WITH ANY OTHER APPLIANCE. GS/GR Series units are never permitted to share a vent with Category I appliances.

4.6.4 Common Vent Test

NOTE: This section does not describe a method for common venting the water heater units. It describes what must be done when an existing unit is **removed** from a category I common vent system.

⚠ NOTICE

At the time of removal of an existing water heater, the following steps shall be followed with each appliance remaining connected to the common venting system placed in operation, while the other appliances remaining connected to the common venting system are not in operation.

1. Seal any Not Used openings in the common venting system.
2. Visually inspect the venting system for proper size and horizontal pitch and determine there is no blockage or restriction, leakage, corrosion and other deficiencies which could cause an unsafe condition.
3. Insofar as is practical, close all building doors and windows and all doors between the space in which the appliances remaining connected to the common venting system are located and other spaces of the building. Turn on clothes dryers and any appliance not connected to the common venting system. Turn on any exhaust fans, such as range hoods and bathroom exhausts, so they will operate at maximum speed.
4. Place in operation the appliance being inspected. Follow the lighting instructions. Adjust thermostat so the appliance will operate continuously.
5. Operate the main burner for 5 minutes then, determine if the cut-draw overflows to the discharge opening. Use the flame of a match or a candle or the smoke of a cigarette, a cigar or a pipe
6. Once it has been determined, according to the method indicated above, that each device connected to the vent system is placed in the open air in an adequate manner. Install the doors and windows, fans, the registers of chimneys and gas appliances to their original position
7. Any malfunction of the venting system should be corrected so that the installation conforms to the National Fuel Gas Code, ANSI Z223.1/NFPA 54 and (or) the installation codes CSA-B149.1. If the size of a section of the evacuation system must be changed, the system should be modified to comply with the minimum values of the relevant tables of appendix F of the National Fuel Gas Code, ANSI Z223.1/NFPA 54 and (or) the installation codes CSA-B149.1

⚠ AVIS

NE PAS METTRE EN COMMUN LES UNITÉS GS/GR AVEC UN AUTRE APPAREIL. GS/GR Series unités ne sont jamais autorisés à partager un évent Catégorie I avec les appareils.

⚠ AVIS

Au moment du retrait d'une chaudière existante, les mesures suivantes doivent être prises pour chaque appareil toujours raccordé au système d'évacuation commun et qui fonctionne alors que d'autres appareils toujours raccordés au système d'évacuation ne fonctionnent pas:

1. Sceller toutes les ouvertures non utilisées du système d'évacuation.
2. Inspecter de façon visuelle le système d'évacuation pour déterminer la grosseur et l'inclinaison horizontale qui conviennent et s'assurer que le système est exempt d'obstruction, d'étranglement, de fuite, de corrosion et autres défaillances qui pourraient présenter des risques.
3. Dans la mesure du possible, fermer toutes les portes et les fenêtres du bâtiment et toutes les portes entre l'espace où les appareils toujours raccordés au système d'évacuation sont installés et les autres espaces du bâtiment. Mettre en marche les sécheuses, tous les appareils non raccordés au système d'évacuation commun et tous les ventilateurs d'extraction comme les hottes de cuisinière et les ventilateurs des salles de bain. S'assurer que ces ventilateurs fonctionnent à la vitesse maximale. Ne pas faire fonctionner les ventilateurs d'été. Fermer les registres des cheminées.
4. Mettre l'appareil inspecté en marche. Suivre les instructions d'allumage. Régler le thermostat de façon que l'appareil fonctionne de façon continue.
5. Faire fonctionner le brûleur principal pendant 5 min ensuite, déterminer si le coupe-tirage déborde à l'ouverture de décharge. Utiliser la flamme d'une allumette ou d'une chandelle ou la fumée d'une cigarette, d'un cigare ou d'une pipe.
6. Une fois qu'il a été déterminé, selon la méthode indiquée ci-dessus, que chaque appareil raccordé au système d'évacuation est mis à l'air libre de façon adéquate. Remettre les portes et les fenêtres, les ventilateurs, les registres de cheminées et les appareils au gaz à leur position originale.
7. Tout mauvais fonctionnement du système d'évacuation commun devrait être corrigé de façon que l'installation soit conforme au National Fuel Gas Code, ANSI Z223.1/NFPA 54 et (ou) aux codes d'installation CSA-B149.1. Si la grosseur d'une section du système d'évacuation doit être modifiée, le système devrait être modifié pour respecter les valeurs minimales des tableaux pertinents de l'appendice F du National Fuel Gas Code, ANSI Z223.1/NFPA 54 et (ou) les codes d'installation CSA-B149.1

4.7 Air Supply and Vent Connections

4.7.1 Vent / Air Pipe Lengths

Water Heater model	2" Combustion Air / Vent Pipe			3" Combustion Air / Vent Pipe		
	Min. Combusion Air Pipe	Min. Vent Pipe	Max. Combustion Air / Vent Pip	Min. Combusion Air Pipe	Min. Vent Pipe	Max. Combustion Air / Vent Pipe
GR199	0 ft (0 M)	3 ft (1 M)	60 ft (18 M)	0 ft (0 M)	3 ft (1 M)	150 ft (45 M)
Deductions per 90˚ Elbow	8 ft (2.4 M)			5 ft (1.5 M)		
Deductions per 45˚ Elbow	4 ft (1.2 M)			3 ft (0.9 M)		
Max. # of Total Elbows	Up to 5			Up to 8		

Table 6. Maximum Vent / Air Pipe Lengths for either 3" or 2 " Pipes

4.7.2 Direct Venting

The water heater uses 3" or 2" diameter exhaust and 3" or 2" diameter intake air ducts. To ensure the draw of air directly from and exhaust directly to the outside of the building, create an airtight seal from the water heater collar to the vent termination.

(For installations in Canada) field-supplied plastic vent piping must comply with CSA B149.1 (latest edition) and be certified Type BH Gas Venting Systems, ULC-S636. Components of this listed system must not be interchanged with other vent systems or unlisted pipes or fittings. All plastic components and specified primers and glues of the certified vent system must be from a single system manufacturer and must not be intermixed with another system manufacturer's parts.

- **Tightening — Water Heater Collar (Socket) to Vent Pipe & Inlet Pipe**

The heater flue collar socket incorporates a gasket seal and screw clamp, and will fit 2" PVC/CPVC Vent Pipe directly. For 3" PVC/CPVC venting or other venting material/systems, 3"- 2" reducer/appliance adapter to fit 2" PVC/CPVC pipe socket is require from the manufacturer.

- **Clean and dry your selected PVC, CPVC vent pipe and Water Heater collar (socket).**
  - You can select to the size of vent pipe (2" & 3"), according to the installation conditions.
  - Push the 2" PVC/CPVC Pipe into the collar (socket) until it touches the bottom of the socket and tighten screw clamp around vent and air intake pipe.

4.7.3 Single Venting(Air Supply from Room)

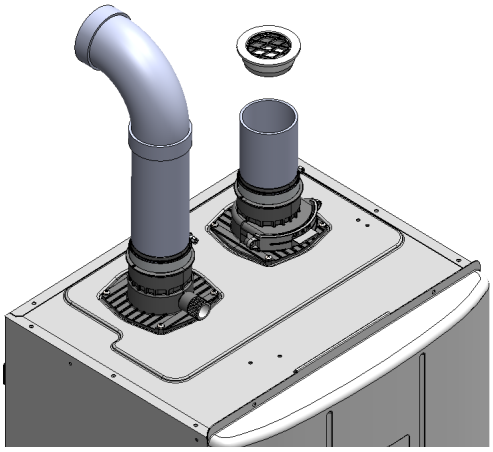

Read and Follow Sections 4.3 & 4.3.1 Combustion Air guidelines first.

1. Insert the termination end cap into the intake air duct.
2. Provide two air openings per section 4.3.1 Combustion Air from Room to allow for circulation of combustion air as specified by ANSI Z223.1/NFPA 54 or in Canada, refer to CSA B149.1, Venting Systems and Air Supply for Appliances.
   Combustion Air Openings Communicating with Indoor Space on the same story
   Two openings: Each opening shall have a minimum free area of 1 sq.in. / 1000 Btu/hr (2200 mm^2/kW) of the total input rating of all appliances in the room. One opening shall commence within 12 in. (300 mm) of the top, and one opening shall commence within 12 in. (300 mm) of the bottom of the room.

Model	GR199
Maximum Input (BTU/H)	199,000
Indoor make up air is provided, two openings each with a minimum free area of 1 in^2 per 1,000 BTU/H	Two openings each with a Minimum 200 in^2 Net Free Area

4.7.4 PolyPropylene Flexible Vertical Vent System

Flexible (Certified to UL-1738/ULC-S636) venting approved for vertical non-direct vent (room air) applications only.
The use of proper adapters and supports are required to fully complete the installation.

Water Heater model	3" Flexible PP	2" Flexible PP
	Max Equivalent length (Flexible+Rigid)	Max Equivalent Length (Flexible+Rigid)
RTGR199N1 / RTGR199X1	150' (45m)	60' (18M)

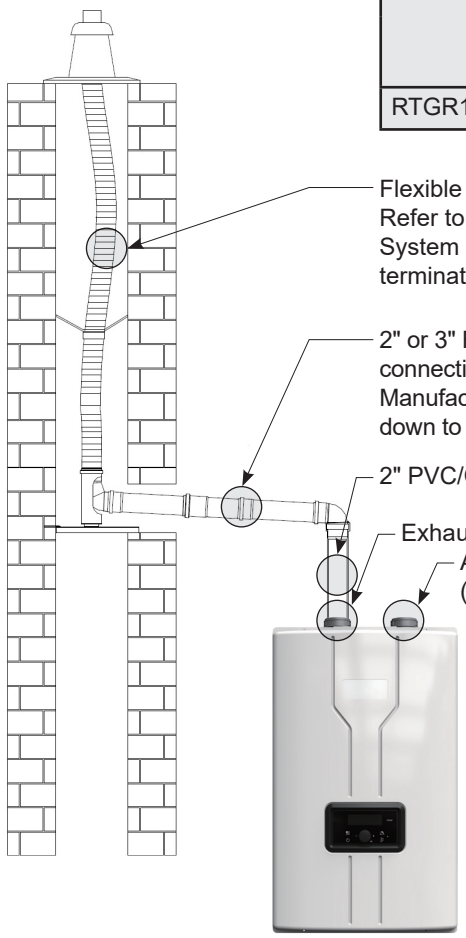

Flexible Polypropylene Vent must be vertical and enclosed in the chimney or B-Vent. Refer to the specific PolyPropylene UL-1738 / ULC-S636 Flexible and Rigid Vent System Manufacturer's Instructions for installation, clearances, materials and termination.

2" or 3" Rigid Polypropylene Venting section between water heater and base-tee/elbow connection to flexible vertical section must be from the same UL-1738/ULC-S636 Vent Manufacturer/System. Slope horizontal section(s) at least ¼ inch per foot (21mm/m) down to the water heater to prevent accumulation of condensate in the venting.

2" PVC/CPVC Pipe Connection Flue collar

Combustion Air Supply:
Refer to Section 4.3 Combustion Air, 4.3.1 Combustion Air from Room.

In U.S., refer to ANSI Z223.1/NFPA 54 in U.S. and in Canada, refer to CSA B149.1 Natural Gas & Propane Installation Code and any applicable Codes.

Rigid Vent Section:
For each elbow, reduce maximum allowable length:
- 8 ft (2.4m) for each 2-inch 90-degree elbow
- 4 ft (1.2m for each 2-inch 45-degree elbow
- 5 ft (1.5m) for each 3-inch 90-degree elbow
- 3 ft (0.9m) for each 3-inch 45-degree elbow
- Max 5 elbows for 2" vent
  Max 8 elbows for 3" vent

4.8 Vent / Air Pipe Termination

All Terminations:
- After connecting terminals, install vent screens on both the vent and air inlet.
  Two 2" vent screens are included with each unit.

Vertical Vent Termination
- Direct Vent - Vertical Terminations with Sloped Roof

Vent Screens are required

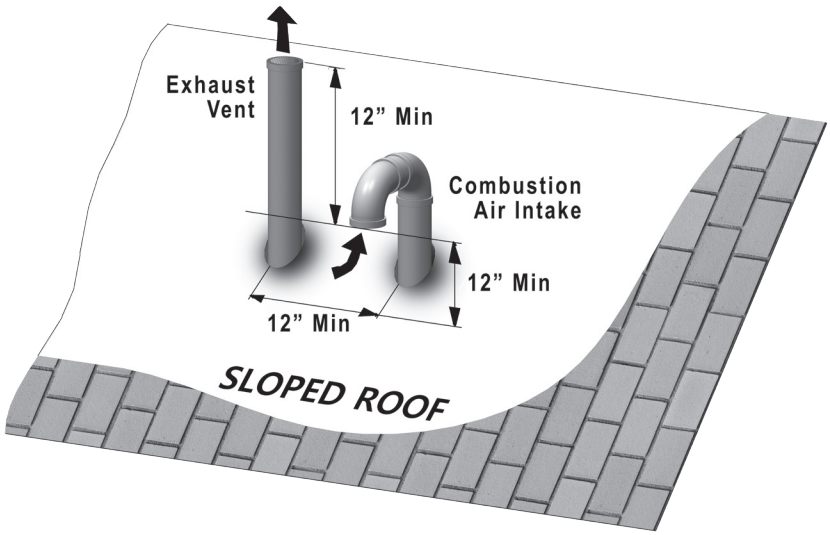

Horizontal Vent Termination

- **Direct Vent - Sidewall Termination**

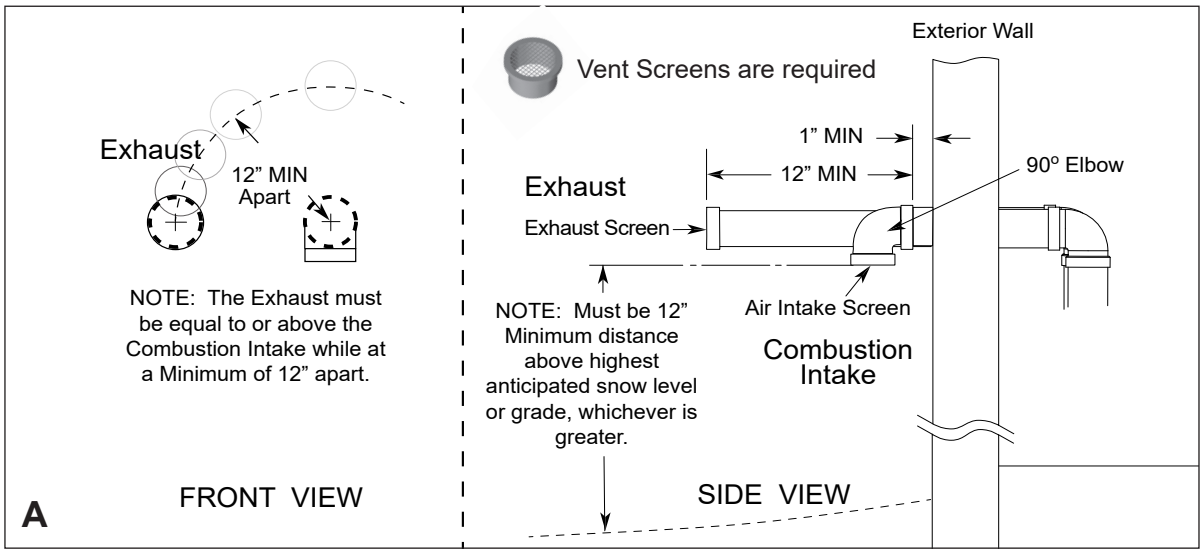

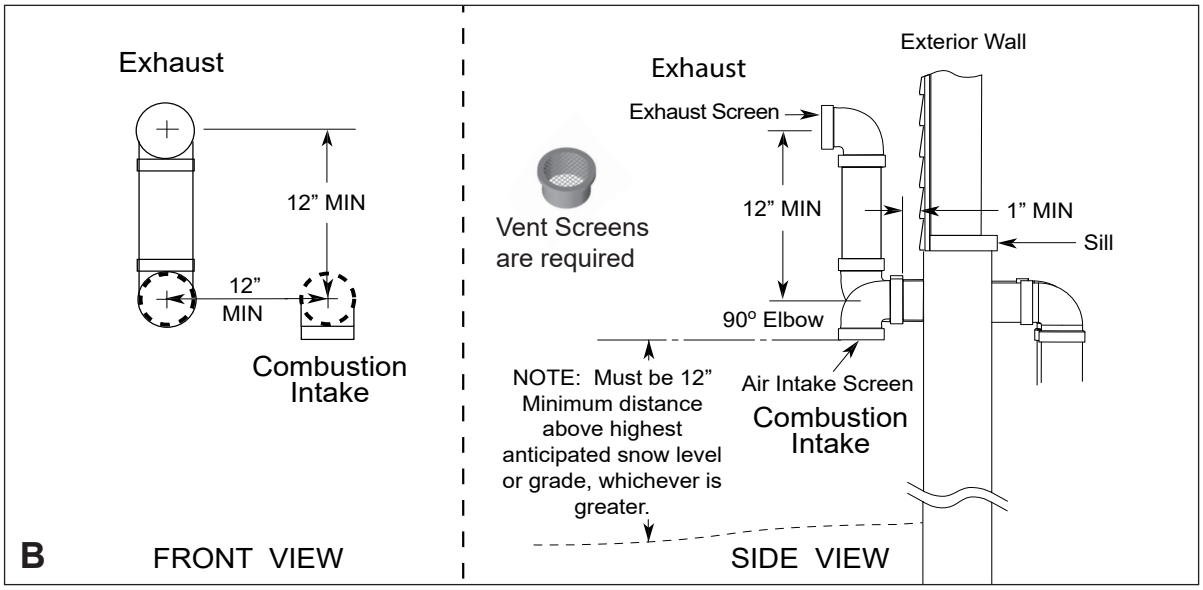

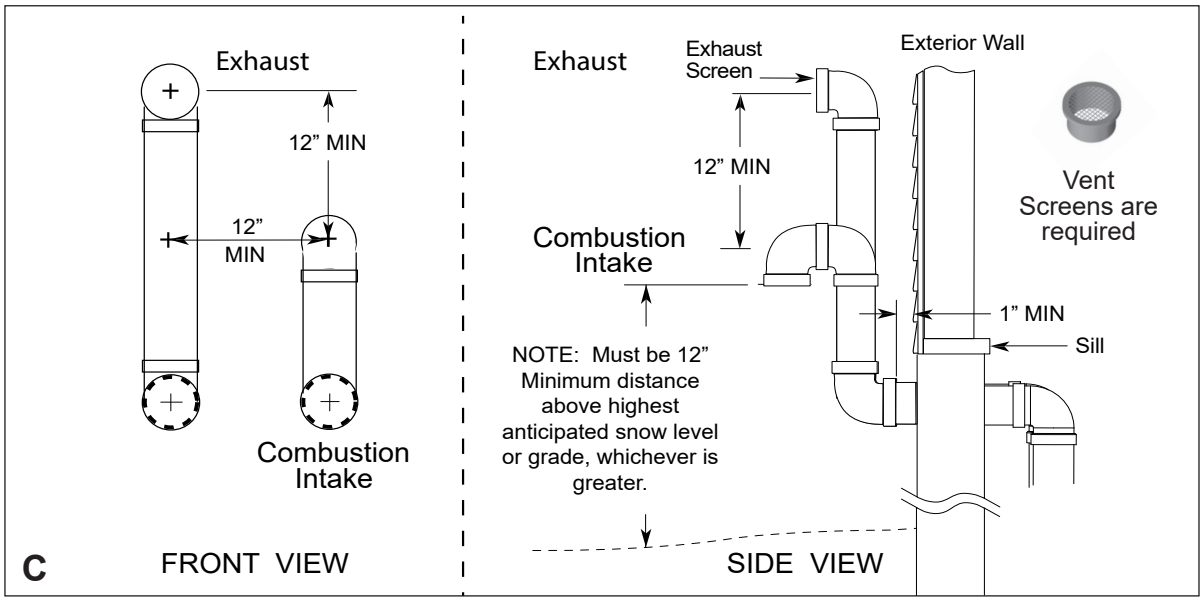

Concentric Vent Termination

- Direct Vent - Optional Horizontal and Vertical Concentric Vent

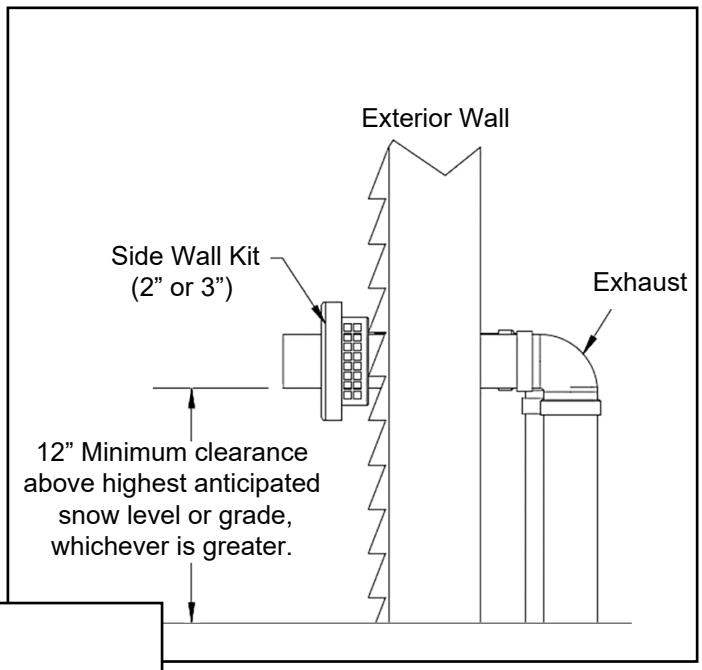

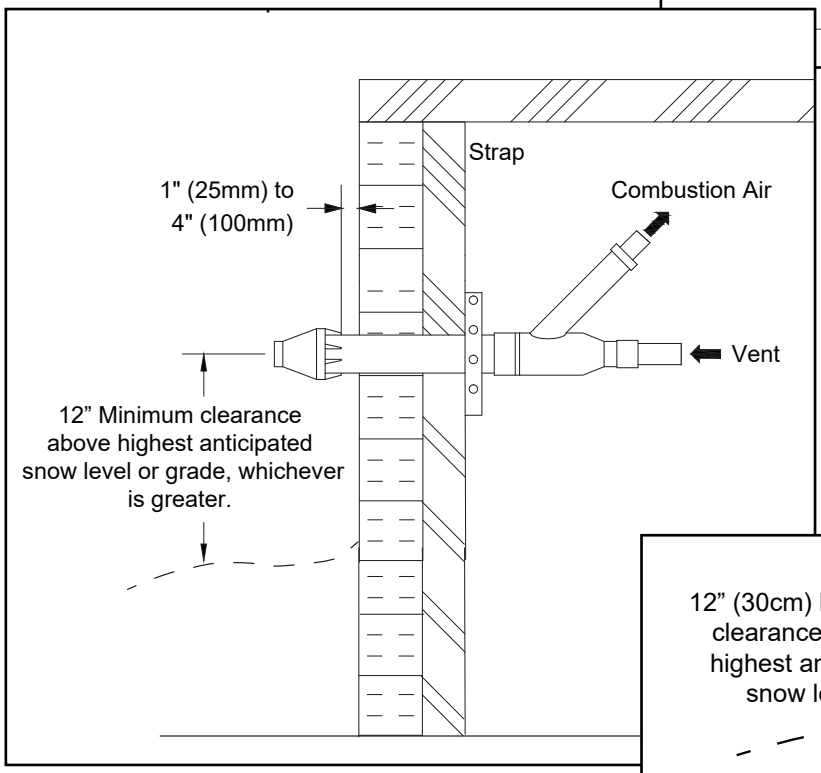

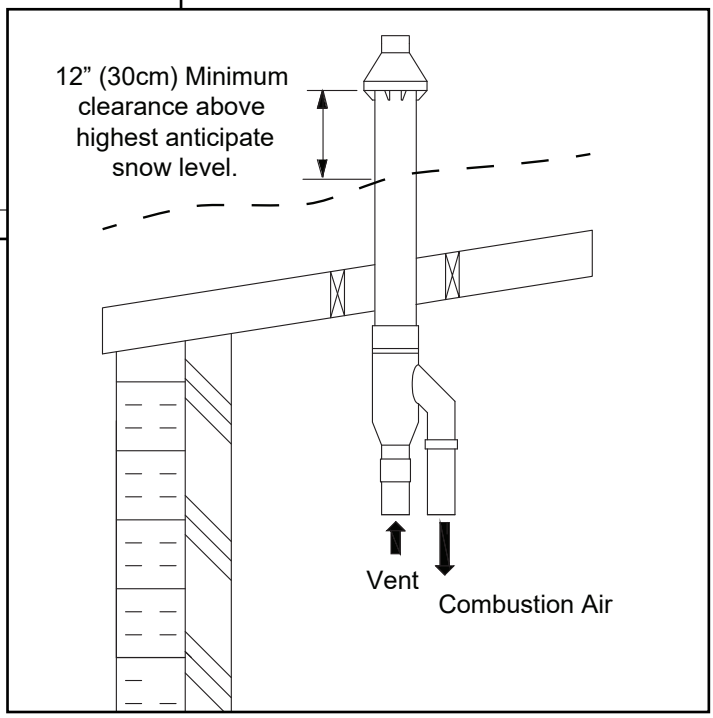

4.9 Cascade System

4.9.1 Piping

Multiple tankless water heaters can be connected via a cascade communication cable to create a bank of water heaters that work in tandem. One or two RTGR units can be cascaded using the cascade communication cable, with multiple RTGS units. The RTGR unit acting as the leader and the RTGS units acting as the followers.

A. General Plumbing Connection Guidelines

- Pipe material must be suitable to meet local codes and industry standards.
- The pipe must be cleaned and without blemish before any connections are made.
- Do not apply a torch within 12" of the bottom connections of the water heater. Doing so could damage the water heater. Such damages ARE NOT covered by product warranty.
- The pipe connections at each unit should be 3/4". When cascading multiple units are supplied through one water main pipe, Main water piping may need up-sizing to minimize pressure loss at peak flow demand.
- Isolation (shutoff valves) should be used to ease future servicing.
- All piping should be insulated.

B. Install a Backflow Preventer and Thermal Expansion Tank

It may be recommended to use a back flow preventer – check local codes. If a back flow preventer or a check valve is used, a thermal expansion tank must be installed on the cold water supply between the water heater and check valve.

⚠ WARNING

To control thermal expansion, a thermal expansion tank should be installed in systems with an installed backflow preventer. Follow expansion tank manufacturer's specifications to properly size an expansion tank to the installation. Failure to properly accommodate thermal expansion could result in property damage, severe personal injury, or death.

C. Piping Diagrams for Cascaded Systems

The next two pages give examples of typical cascading water heater piping diagrams.

⚠ CAUTION

Use at least the MINIMUM pipe size for all water heater loop piping. This is to avoid the possibility of inadequate flow through the water heater. Using less than the required minimum pipe size could result in system problems, property damage, and premature water heater failure. Such problems ARE NOT covered by product warranty.

Use both thread tape and pipe dope to connect to the ¾" CH domestic water inlet and outlet. Isolation valves between the city water supply and unit inlet are recommended for ease of service.

Quantity		1	2	3	4	5	6	7	8
Pipe Diameters	mm	20	25	30	40	40	50	50	50
	in	¾	1	1 ¼	1 ½	1 ½	2	2	2

Quantity		9	10	11	12	13	14	15	16
Pipe Diameters	mm	65	65	65	65	65	65	80	80
	in	2 ½	2 ½	2 ½	2 ½	2 ½	2 ½	3	3

C. Piping Diagrams for Cascaded Systems (continued)

CHECK VALVE	STRAINER	SHUTOFF VALVE	UNION
GAS BALL VALVE	SERVICE 3-WAY ISOLATION VALVE	SERVICE 3-WAY ISOLATION VALVE W/PRV PORT	EXPANSION TANK
TT24 sensor	THERMOSTATIC CROSSOVER VALVE	FAUCET	CIRCULATOR PUMP
PRESSURE RELIEF VALVE			

Piping Symbol Legend

Refer to Sections:
4.9.2: Electrical
4.9.3: Cascade Programming
4.15: Re-circulation Setting

Cascaded System - Internal Recirculation

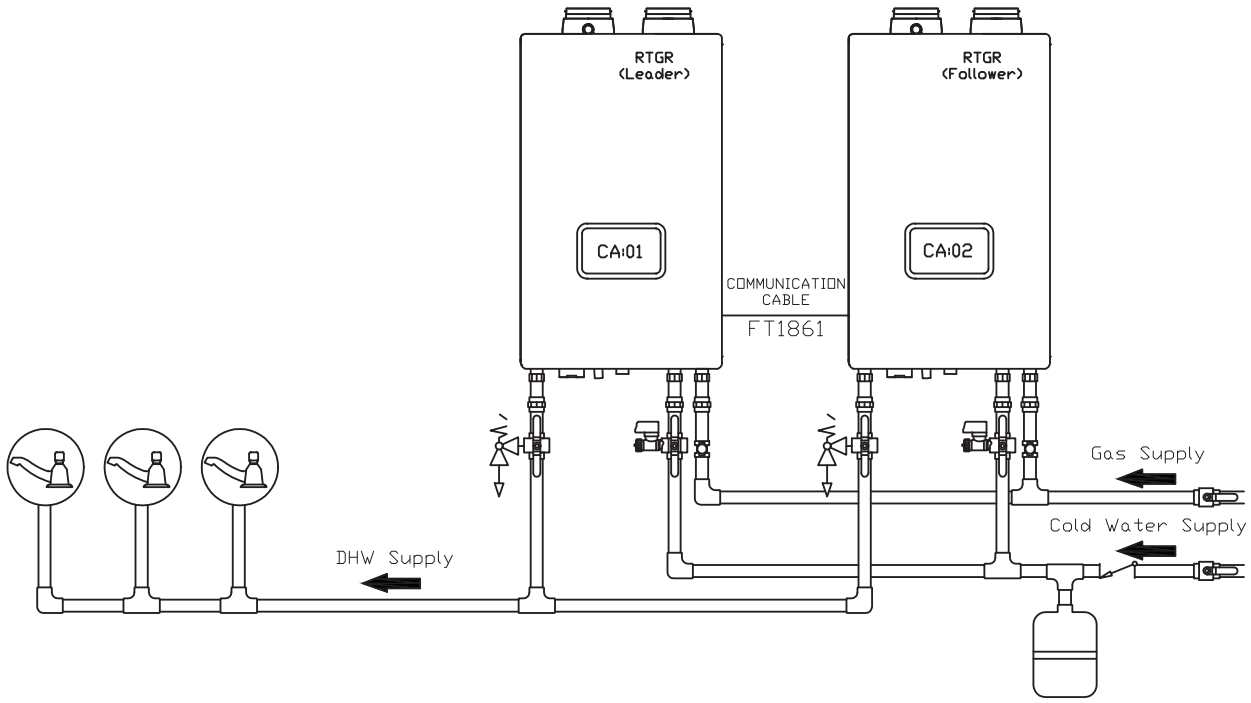

Cascaded System - Recirculation

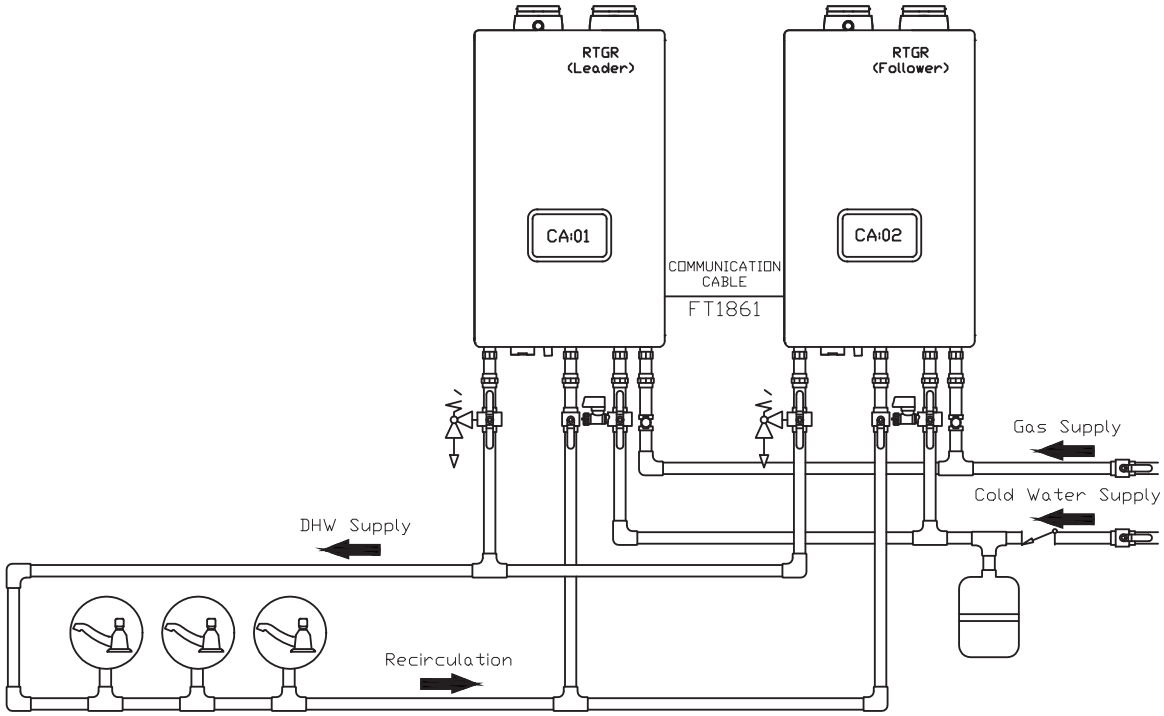

Cascaded System - Recirculation with multiple RTGS Units

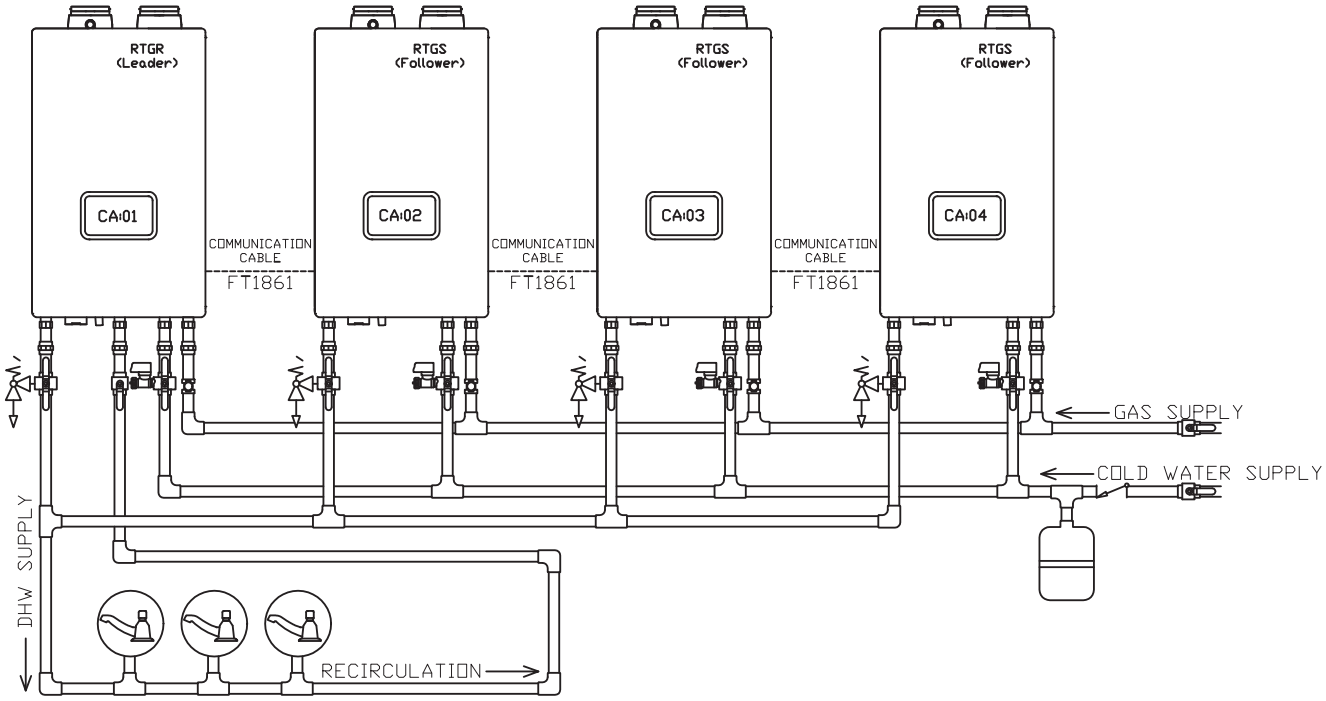

4.9.2 Electrical

A. Wiring Connections for Cascade

Components Needed :
FT1861: (1 per unit) Cascade Communication Cable with Ending Resistor.

Example. If you are cascading 2 tankless units, you will need **2** X **communication cables** and you will only need one of the included ending resistors.

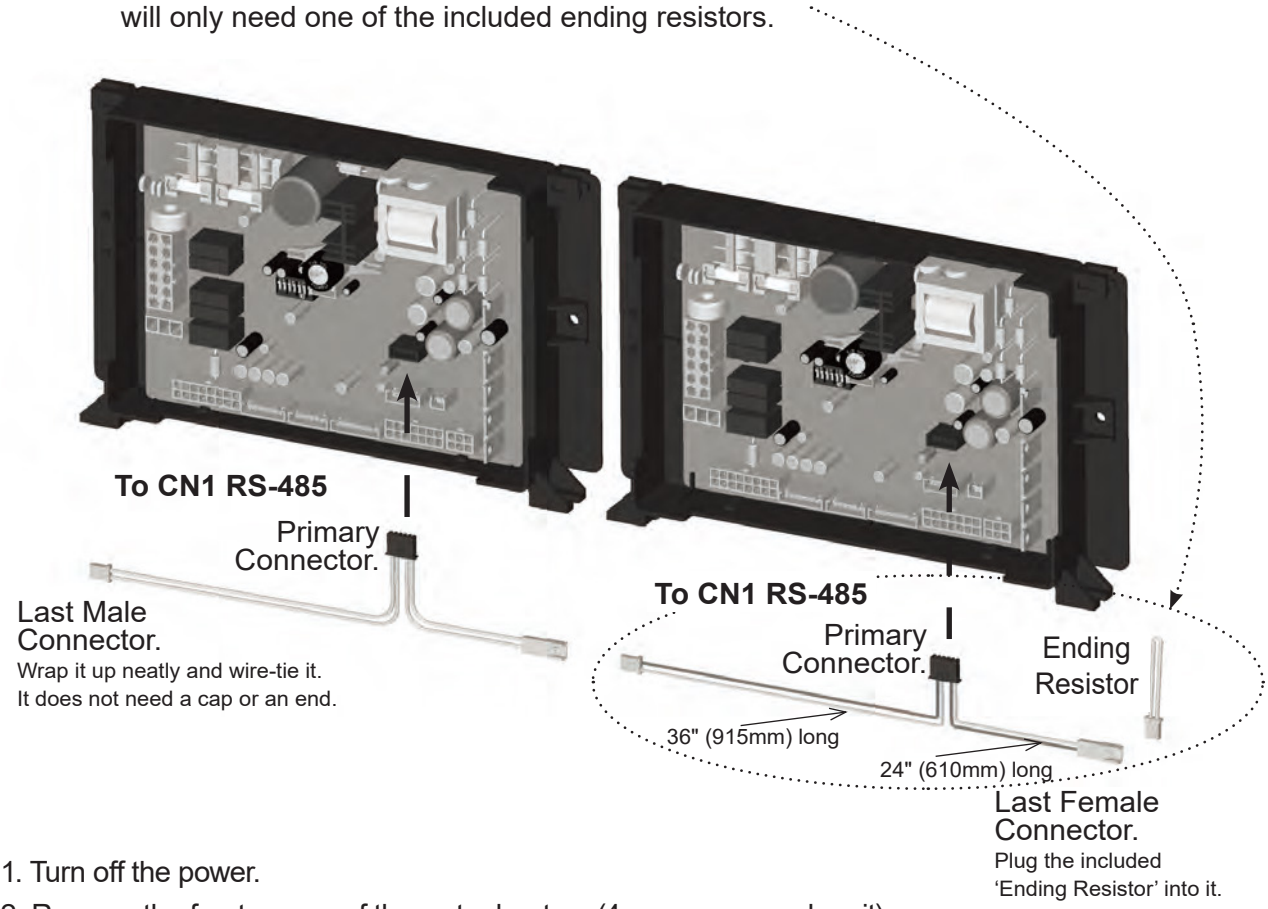

1. Turn off the power.
2. Remove the front covers of the water heaters (4 screws on each unit).
3. Connect the 'Cascade Communication Cables' to every unit (add the Resistor to the end of the last follower. Use the wiring throughway at the bottom of each unit.

4. Plug the primary connector on the cable (as shown) to the receptacle inside the unit.
5. Replace the front covers.
6. Turn on the power.

4.9.3 Cascade Programming

A. To Program the Tankless Water Heater **Leader:**
Once all of the 'Connection Wires' are made and all units are powered on, there are 2 parameters that need to be programmed on the leader unit before moving on to the follower units.

13:cn - **(Unit ID of the cascade system)** Sets Cascade Address. **The Leader should always be addressed 01.**

14:Eh - Common Vent Setting.**(on : Blowers operate simultaneously oFF (default) : Blowers in the cascade system operate independently (NRV installation required))**

Refer to Section 5.6: **Installer Mode** for additional information

1. **START** by turning OFF the Power to the Display Control of the LEAD Unit.
2. Then, with the display OFF, Press and HOLD (5 seconds) the button to get into the Installer Mode.

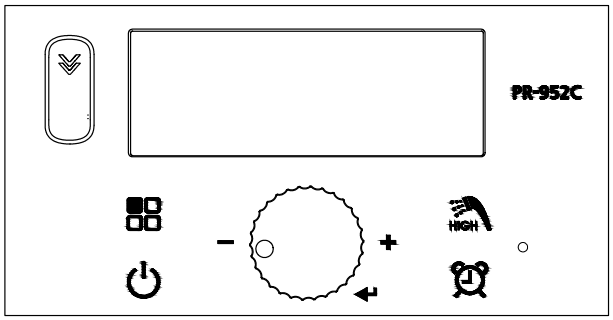

3. Rotate the Dial until you get to 13:cn. Tap the Dial to enter into that Parameter.

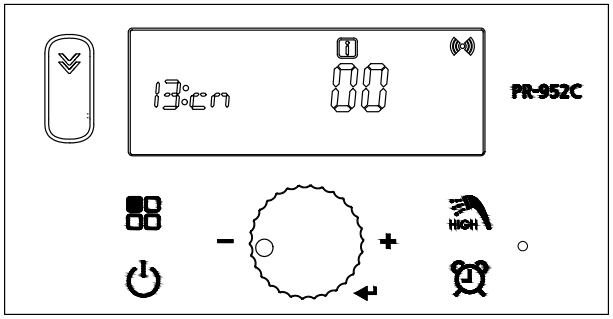

4. Adjust to 01 and then press (tap) the Dial to save and to Exit.

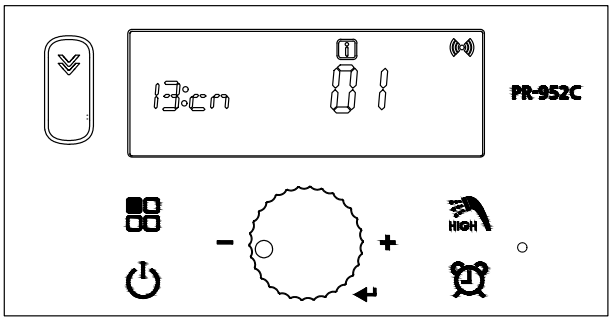

5. Rotate the Dial until you get to 14:Eh. Tap the Dial to enter into that Parameter.

⚠ NOTICE

14:Eh common vent setting can be engaged to allow all blowers to run simultaneously.
If NRV (Non-return valve) is installed on each exhaust vent, this is not required.

B. To Program the Tankless Water heater **Follower:**

Now move over to the follower unit and perform only 13:cn – **(Unit ID of the cascade system)** to each of the following units.

13:cn - **(Unit ID of the cascade system)** Sets Cascade Address. **The Follower should always be addressed 02 or higher number if multiple GS is cascaded.**

1. Rotate the Dial back to 13:cn. Tap the Dial to enter into that Parameter.

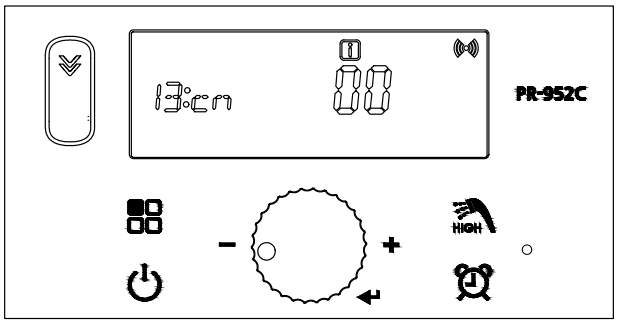

2. Adjust to the **02** for cascaded following unit, and then press (tap) the Dial to save and to Exit.
   This heater is now the designated **Follower**.

3. Finish by pressing the button.

   If you make a mistake in this setting mode, the LCD will show a “78” error code.**(Cascade Communication Error)**

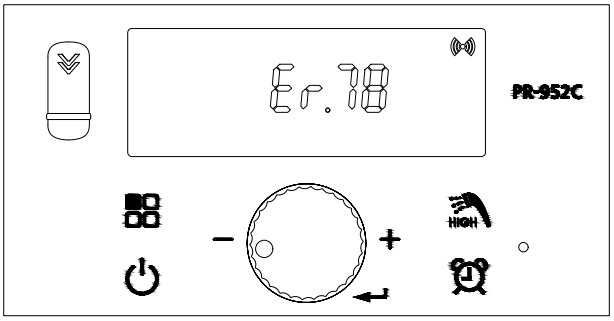

4.9.4 Common Vent System

4.9.4.1 About the common venting system

The Common Vent System provides an easy way to install up to 8 tankless water heaters. By sharing a Common Air Intake pipe and a Common exhaust vent pipe, effective system air intake and venting is achievable with less venting materials and minimal number of penetrations on the walls or roofing.
Read all safety messages and carefully follow the guidelines in this manual when installing a common venting system for the tankless water heaters

⚠ WARNING

Improper venting of the water heaters can result in excessive levels of carbon monoxide, which can lead to severe personal injury or death. The water heaters must be vented in accordance with the "Venting of Equipment" section of the latest edition of the ANSI Z223.1/NFPA 54 Natural Fuel Gas Code in the USA, as well as all applicable local building codes and regulations. Follow all instructions and guidelines when venting the water heaters. Venting should be performed only by a licensed professional.
Venting system must be sealed gastight to prevent flue gas spillage and carbon monoxide emissions, which will result in severe personal injury or death. The building owner is responsible for keeping the exhaust and intake terminations free of snow, ice, or other potential blockages, as well as scheduling routing maintenance. Blocked or obstructed vent piping terminations could result in property damage, severe personal injury, or death.

⚠ DANGER

Category IV appliances require a special venting system. The vent system will operate with a positive pressure in the pipe. Exhaust gases must be piped directly outdoors using the vent materials and rules outlined in these instructions. Do not connect vent connectors serving appliances vented by natural draft into any portion of mechanical draft systems operating under positive pressure. Follow the venting instructions carefully. Failure to do so will result in substantial property damage, severe personal injury, or death.

Consult with the Authority Having Jurisdiction (AHJ), and all applicable Local, State, National, and Provincial Codes, Regulation, and Bylaws. Allowable materials for venting and Vent System Certification requirements varies with the jurisdiction of the installation.

Consult with the vent material manufacturer for suitability of their product for flue gas venting, temperature limitation, and installation requirements.

4.9.4.2 Guidelines for a common venting system

⚠ CAUTION

To ensure the correct operation of the common vent system,

- A cascade communication cable MUST be installed between all units in the common vent system by the installer.
- Non-return valves must be installed in the exhaust duct of each water heater.
- Use direct vent systems (with separate intake) This section covers the installation of a common vent system for the water heaters sold with this manual.

To ensure the safe and correct installation of the common vent system, carefully follow the instructions and guidelines.

- Check to see if all contents are included in the package. Refer to section 4.9.5.1 NRV(Non-return valve).
- A maximum of 8 water heaters may be connected to one common venting system. In a system that has more than 8 tankless water heaters, use 2 common vent systems or consult manufacturer.
- For air intake and vent pipe, consult with the specific pipe material's Installation Instructions and manufacturer. Use only approved jointing method for piping, adapters and fittings.
- Position the water heaters as close as possible to the vent termination.
- Install a new vent system with this appliance. If an existing vent system is reused, thoroughly inspect it for punctures, cracks, or blockages prior to connecting it to the water heater. Ensure existing venting system complies with the latest codes for the jurisdiction where the install is located.

- The common venting system covered in this manual is approved both Single and direct venting applications.
- Horizontal vent pipe runs must be supported every 4 feet (1.2 m) (minimum).
- All vertical vent pipe runs must be supported every 6 feet (1.8 m) (minimum). Support the vent pipe with hangers at regular intervals or as required by local codes.
- Install Non return valve for each water heaters. Use only the Non return valve specified in this manual. Refer to section 4.9.5 NRV(Non-return Valve)
- To avoid moisture and frost build-up and to maintain clearances to openings on adjacent homes, 45° elbows, 90° elbows, or tees may be attached to the end of the termination vent pipe to direct the exhaust plumes away from buildings, as long as the total allowable vent lengths, maximum number of elbows, and distances to air intake restrictions are observed.
- If the water heaters will be installed in areas where snow is known to accumulate, protect the vent termination from blockage. Provide a minimum of 1 foot (30 cm) clearance from the bottom of the exhaust of the expected snow accumulation level. Snow removal may be necessary to maintain clearance.
- Ensure that the vent termination is at least 12 in (305 mm) above ground, 12 in (305 mm) above the highest anticipated snow level, or as required by local codes, whichever is greater.
- Support the vent pipe with hangers at regular intervals or as required by local codes.
- The vent for this appliance shall not terminate over public walkways; or near soffit vents or crawl space vents or where condensate or vapor could create a nuisance or hazard or cause property damage; or where condensate or vapor could cause damage or could be detrimental to the operation of regulators, relief valves, or other equipment.

Vent and air intake termination clearances varies with jurisdiction. Consult with the Authority Having Jurisdiction (AHJ), and all applicable Local, State, National, and Provincial Codes, Regulation, and Bylaws. Refer to the National Fuel Gas Code, ANSI Z223.1/NFPA 54; or in Canada, the Natural Gas and Propane Installation Code, CSA B149.1. All applicable provisions of the National and local Building Code must also be adhered to.

■ Clearances Between Multiple Units

Ensure that the installed water heaters or boilers satisfy all installation clearances provided in the manual. It is essential that there is sufficient clearance space for the common vent system to work properly.
The water heater or boiler units can be mounted either IN-LINE or BACK TO BACK by using the optional Rack System illustrated below.

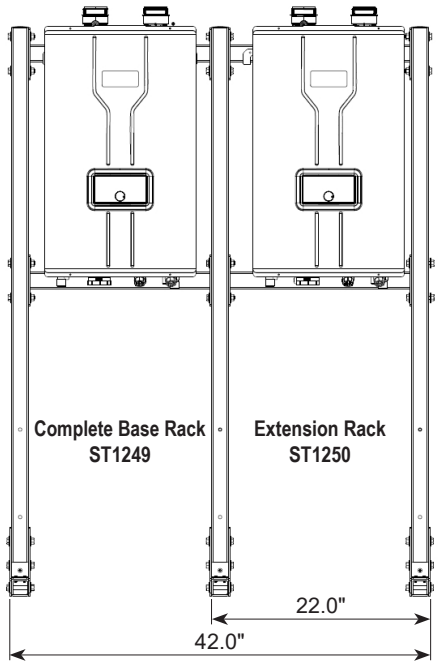

[Cascade Rack System]

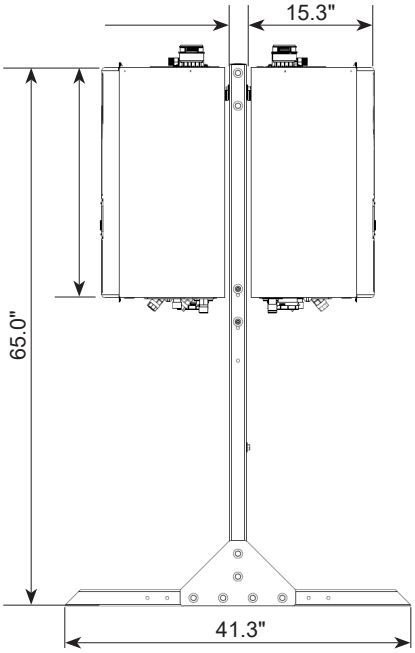

[Back to Back Setup]

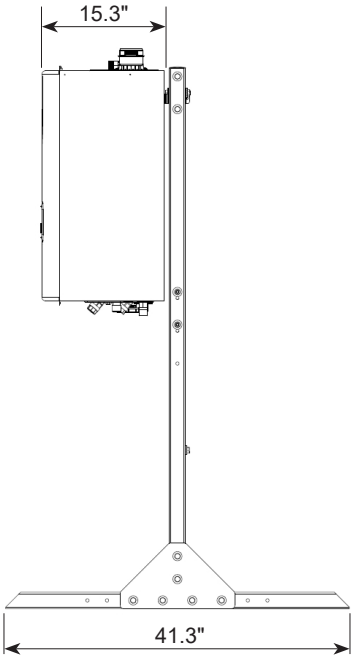

[In-Line Setup]

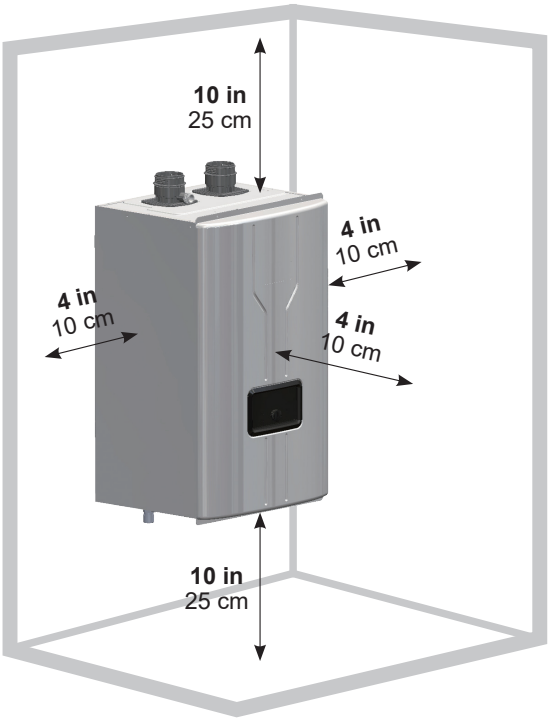

[Minimum clearances to Combustibles.]

For installation from Non-Combustibles and Combustibles		Suggested Service Clearance
TOP	10 in (25 cm)	18 in (46 cm)
BACK	3/4 in (1.9 cm)	3/4 in (1.9 cm)
FRONT	4 in (10 cm)	40 in (101 cm)
SIDE	4 in (10 cm)	8 in (20 cm)
BOTTOM	10 in (25 cm)	24 in (61 cm)

Table A - Minimum Clearances to Combustibles and for Service.

■ General Location Guidelines

When installing and operating the common venting system, the following standards and regulations must be complied with and adhered to:

- Local codes or, in the absence of local codes, the National Fuel Gas Code, ANSI Z223.1/ NFPA 54 and/ or CSA B149.1, Natural Gas and Propane Installation Code.
- Appliance and vent system manufacturer's Installation Instructions
- Regulations on the supervision of construction
- Statutory provisions.
- Installation and service work must be carried out by licensed professionals only

■ Risk Guidelines

- Ensure that all common venting system components are manufactured and installed in accordance with valid standards, regulations, and safety engineering rules.
- To avoid risk, the common venting system must be installed and used only for the original purpose described in this manual.
- Defects or damages found in a common venting system must be addressed and repaired immediately.
- For roof or chimney modifications, refer to the relevant industrial safety regulations.
- Works on roofs and facades are dangerous. Comply with all relevant regulations.

■ Cutting and Assembling Common Vent System Components

Standard tools are suitable for the cutting and assembly of common vent system components.
Follow the guidelines listed below when working with the components.

- When cutting vent components, ensure that the cuts are straight. Chamfer and deburr all edges before installing the components.
- All vent joints must be fully tightened.
- Before operating the system, ensure that the Installed vent system is clean and free of debris.
- Ensure that the vent system is rigidly supported according to the manual's instructions.

■ Selecting Vent Pipe Materials

Consult the following chart or the most recent edition of ANSI Z223.1/NFPA 54, as well as all applicable local codes and regulations when selecting vent pipe materials. This appliance should be vented with materials approved for Category IV gas appliances. Do not use cellular core PVC (ASTM F891). See below for recommended vent materials.

⚠ NOTICE

DO NOT COMMON VENT UNITS WITH ANY OTHER APPLIANCE. Water Heater Series units are never permitted to share a vent with Category I appliances.

⚠ WARNING

Use of cellular core PVC (ASTM F891), cellular core CPVC, or Radel® (polyphenolsulfone) in venting systems shall be prohibited.

⚠ WARNING

Failure to use the appropriate vent material, installation techniques, glues/sealants could lead to vent failure causing property damage, personal injury or death.

⚠ WARNING

All venting must be installed according to this manual and any other applicable local codes, including but not limited to, ANSI Z223.1/NFPA 54, CSA B149.1, CSAB149.2 and ULC-S636.
Failure to follow this manual and applicable codes may lead to property damage, severe injury, or death.

MATERIAL	UNITED STATES	CANADA
PVC, sch 40	ANSI/ASTM D1785	Venting must be ULC-S636 certified for use as venting material. The venting material must be chosen based upon the intended application of the water heater.
CPVC, sch 40	ANSI/ASTM F441	
Polypropylene	UL1738 or ULC-S636	
Stainless Steel AL29-4C	Certified for Category IV and direct vent appliance venting	

Table B - Venting Installation Standard

■ **Setting the vent type**

1. **Turn OFF the Power to the Display Control.**
2. **Then, with the power OFF. Press and HOLD the button to get into the Installer Mode.**
3. **Rotate the Dial until you get to 15:Vt Tap the Dial to enter into that Parameter.**

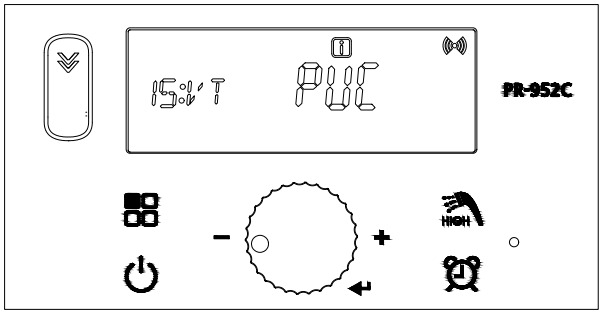

4. **Turn the Dial to select either PVC or CPVC.**

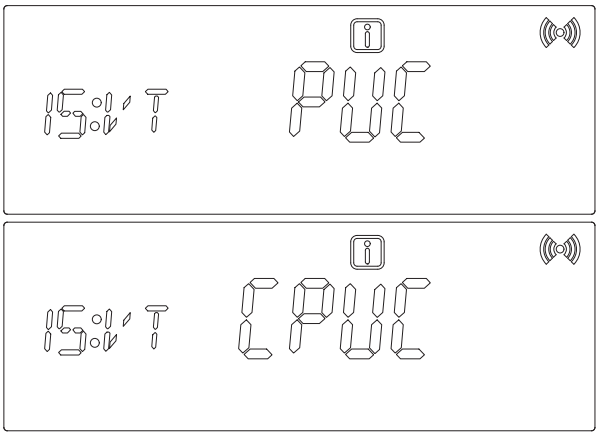

5. **Finish by pressing the button.**

■ **Vent pipe pitch and supports**

Vent pipe must pitch upward, toward the vent terminal, not less than 1/4" per foot, so that condensate will run back to the water heater to drain. Route vent pipe to the heater as directly as possible. Seal all joints and provide adequate hangers as required in the venting system manufacturer's Installation Instruction. Horizontal portions of the venting system must be supported to prevent sagging and may not have any low sections that could trap condensate. The unit must not support the weight of the vent pipe.

4.9.5 Installing the Common Vent System with PVC or CPVC venting materials

4.9.5.1 NRV(Non-Return Valve)

The NRV prevents backflow (back-draft) at the exhaust vent while the water heater operates.

By closing the exhaust vent as soon as the combustion cycle ends, the NRV retains heat in the system for longer periods. This improves the system's thermal efficiency.

NOTE : When using a common vent in a cascade system, backflow devices are required to prevent exhaust from entering the building.

■ Included Items

NRV	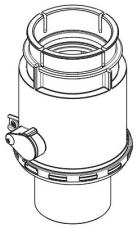
Exhaust Duct Clamp	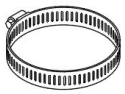

■ Specifications

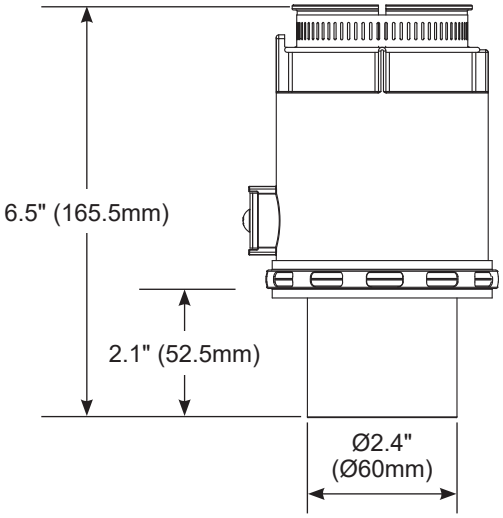

Part Name	NRV(Non-Return Valve)
Part Number	ST1253
Material	Flame Retardant PP(Polypropylene)

⚠ CAUTION

Common Venting requires a Non-Return Valve on each water heater exhaust connector. Use only the NRV specified in this manual.
Each heater must be setup for Cascade Operating Mode. Refer to sections 4.9.2 Electrical and 4.9.3 Cascade Programming.

■ Maintenance Port

NRV has a maintenance port to allow you to easily inspect the operating condition of the damper.

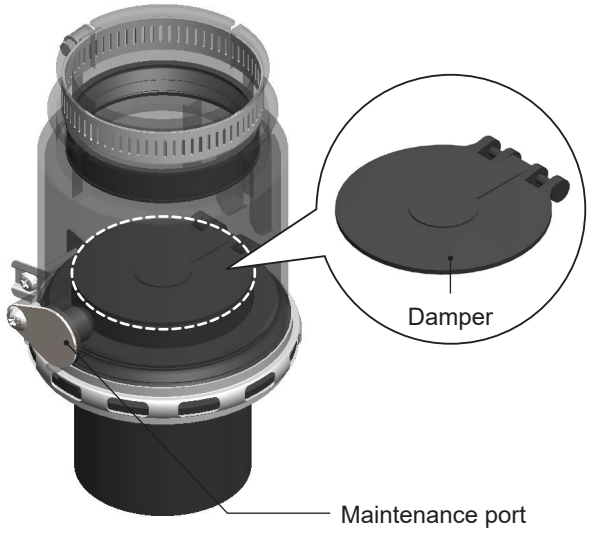

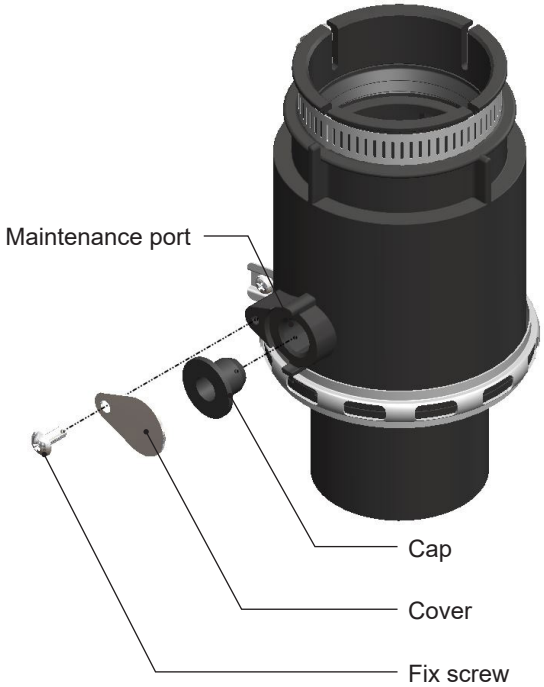

Refer to "4.9.5.2 Maintenance" for detailed inspection procedures.
NRV(Non-Return Valve)

4.9.5.2 Maintenance

Periodically check the damper condition inside the NRV through the maintenance port to ensure optimal performance of the system. Follow the instructions to check the damper condition and replace the NRV if necessary.

1. Remove the screw that fixes the cover to the backflow damper, and then remove the cap and the cover.

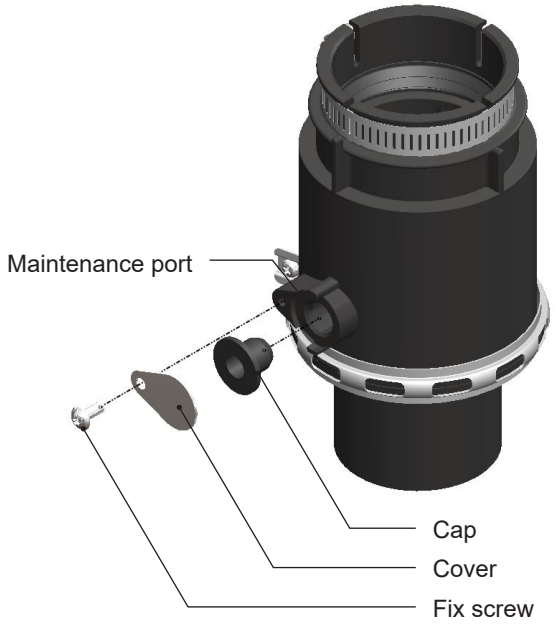

2. Through the maintenance port, check the operating condition of the damper plate inside the backflow damper.

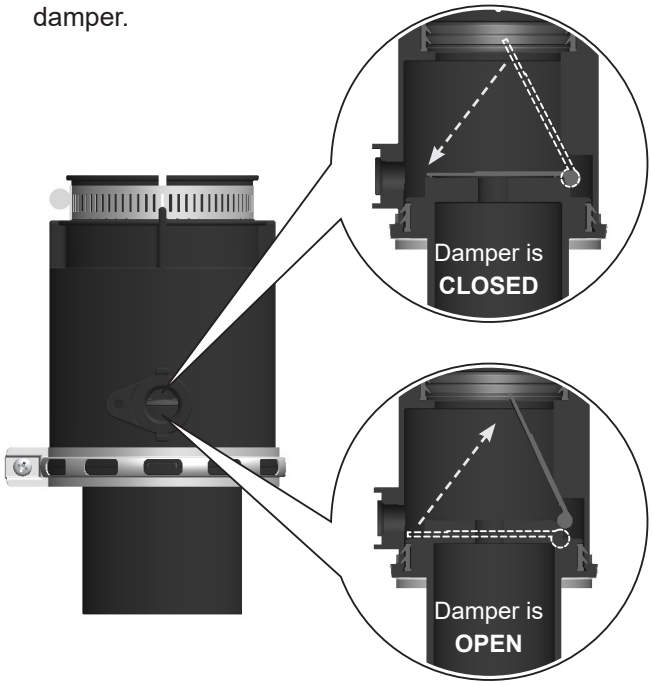

3. Reinstall the cap and cover, and then fix them with a set screw.

4. Visually inspect the maintenance port to ensure that the cap is properly installed between the maintenance port and the cover.

⚠ WARNING

Ensure that the cap is properly installed under the maintenance port cover, after checking the operating condition of the damper through the maintenance port. Harmful exhaust gas may leak if the cap is not installed, or if it is not installed properly.

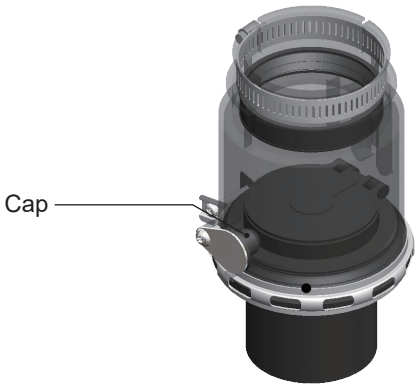

4.9.5.3 Connecting the Pipe to the Common Vent

1. Cut the pipe to the measurement, and note the length where the fitting will over lap.

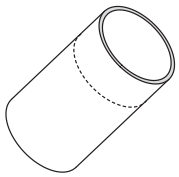

2. Remove any contaminants on the pipe cut.

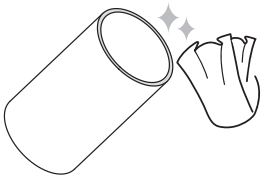

3. Apply a moderate amount of primer/glue to the outside of the pipe fully coating the area that will overlap. Use only approved primers and glues per the vent pipe manufactures specifications and instructions.

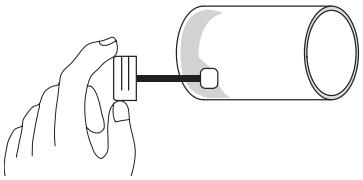

4. Apply a moderate amount of primer/glue to the inside of the socket, fully coating the area the will over lap the pipe. Use only approved primers and glues per the vent pipe manufactures specifications and instructions.

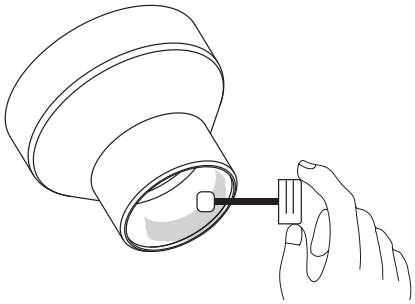

5. Rotate the pipe to insert it to fully into the socket. Hold the connection together for a few seconds for the glue to set, then let it dry.

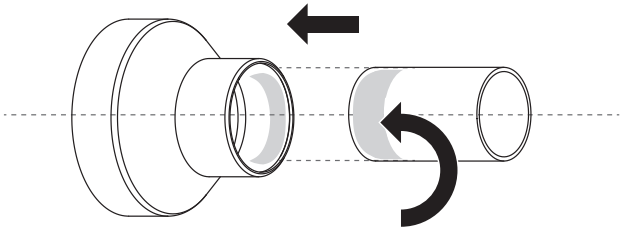

⚠ WARNING

Ensure that all vent pipe cuts are free of burrs and that the pipe is filly inserted to the exhaust gas fitting. Failure to properly remove burrs and install the pipe can lead to joint separations and vent gas leakage, which may result in serious injury or death.

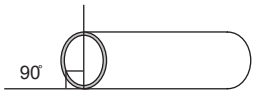

4.9.5.4 Connecting the Pipe to the NRV

1. Measure 1.3"(33mm) from the end of the vent pipe, then draw an insertion mark at that point all the way around the pipe.

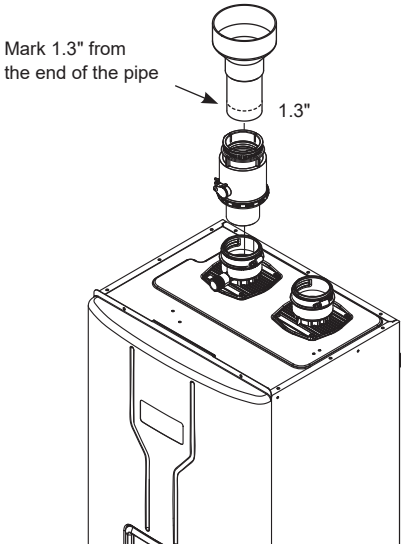

2. Make sure to completely slide the pipe into the NRV until the end makes contact with the bottom of the socket.

NOTE : Verify that 1.3" of the pipe has been completely inserted into the NRV by checking the insertion marking.

3. Tighten the clamp with a screwdriver to properly seal the joint.

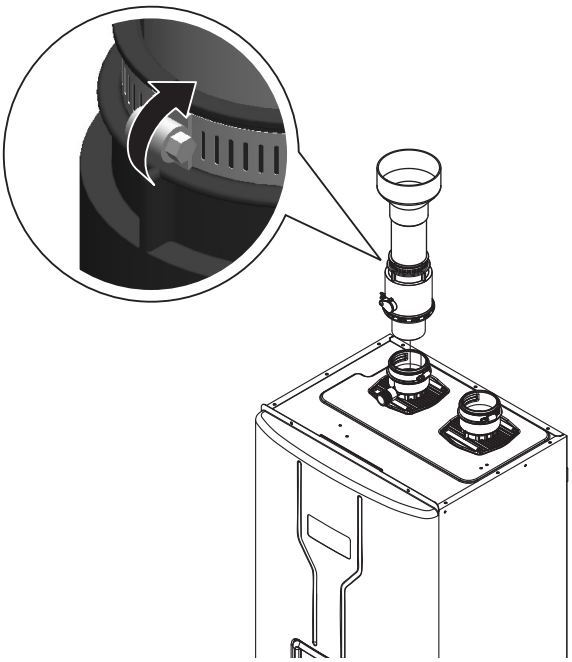

4.9.5.5 Determining the Length of a Common Venting System

Follow the instructions listed below to determine the length of a common vent.

1. Add the BTU/H input ratings for each unit in the cascading system to determine the total BTU/H rating.
2. Determine the total length (L) of the common vent, which consists of the horizontal width (W) and the vertical height (H):
   Total length (L) = W + H.

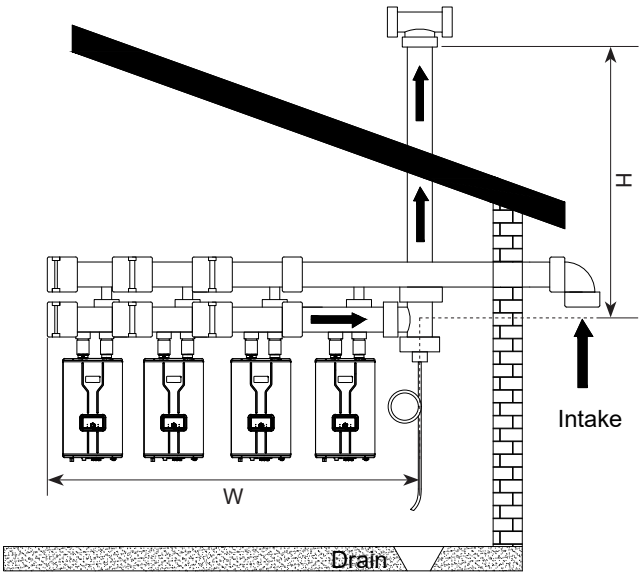

Common Vent Length Table [Total Length (L) = W + H]

Required Load (Total BTU/H)	# of Units	Total Length (ft)			
		3"	4"	6"	8"
399,800	2	60	106	200	
599,700	3	30	71	160	
799,600	4		53	120	
999,500	5			96	150
1,199,400	6			80	142
1,393,300	7			68	121
1,599,200	8			60	106

NOTE : Every 90° elbow used is equivalent to 8 linear feet (2.4 m) of vent length

■ **Example of a Typical Installation**

The following illustration depicts an example of a common vent system installed for a cascade system of 8 water heaters.

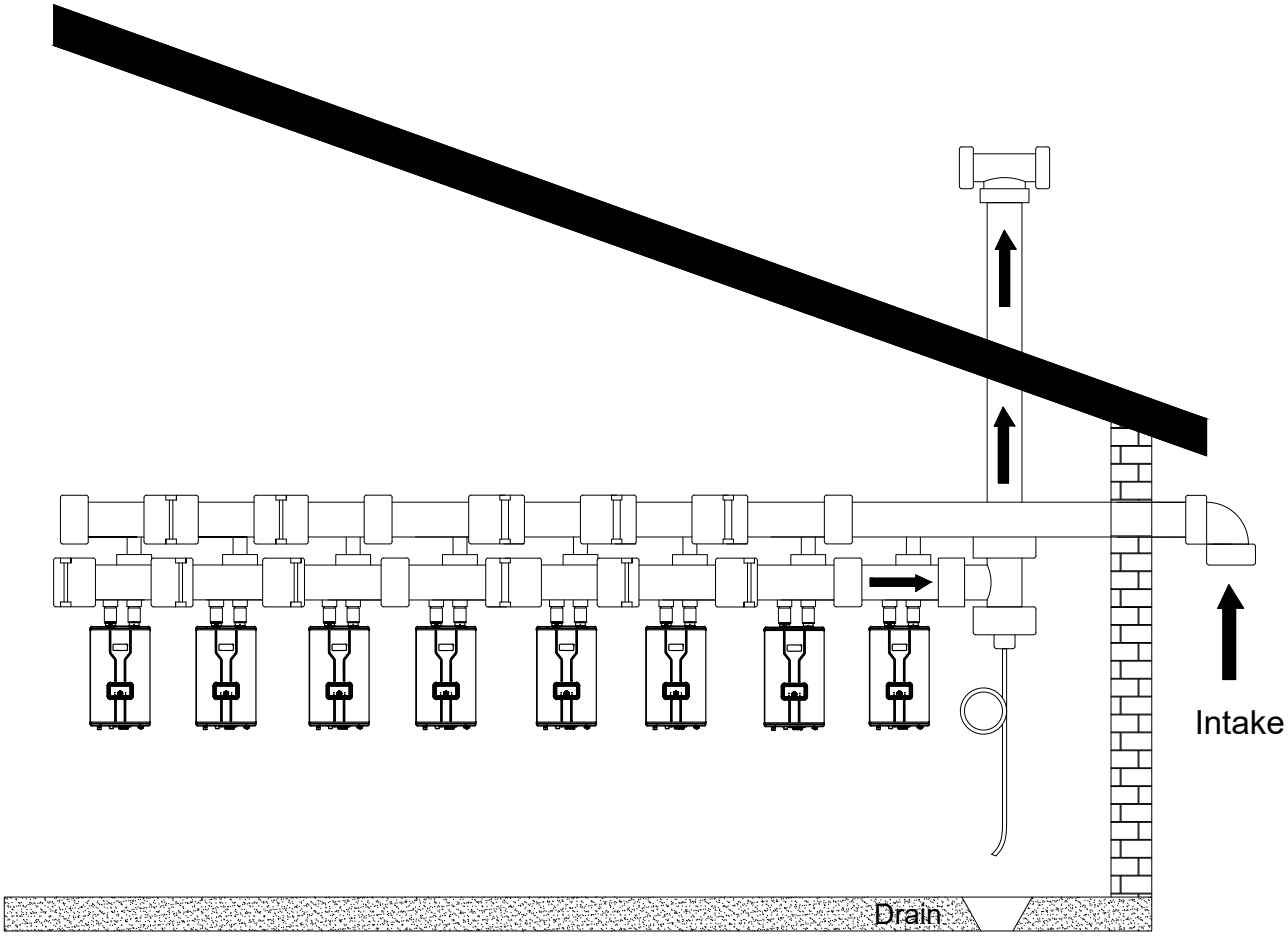

NOTE : The illustration is intended for reference purposes only.

■ **Installing a Condensate Drain Tee and Hose Loop Trap**

1. Form a loop no smaller than 5"(130mm) in diameter. With a drain hose and fix it with a tie.
2. Prime the loop using tap water.
3. Install the hose to the cascade system and direct the end of the hose to a drain.

⚠ WARNING

After installing the condensate drain hose, check the loop again to ensure that the prime water is not spilled.
The loop (siphon) must be primed with water before running the system to prevent toxic exhaust gas from leaking into the installation site.

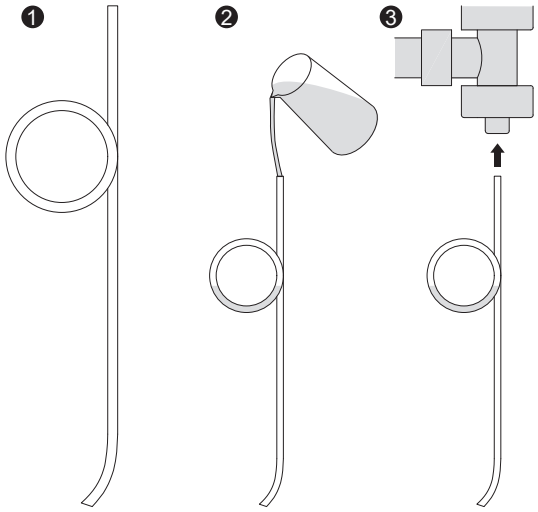

4.9.6 PVC Common Venting Componets Configuration

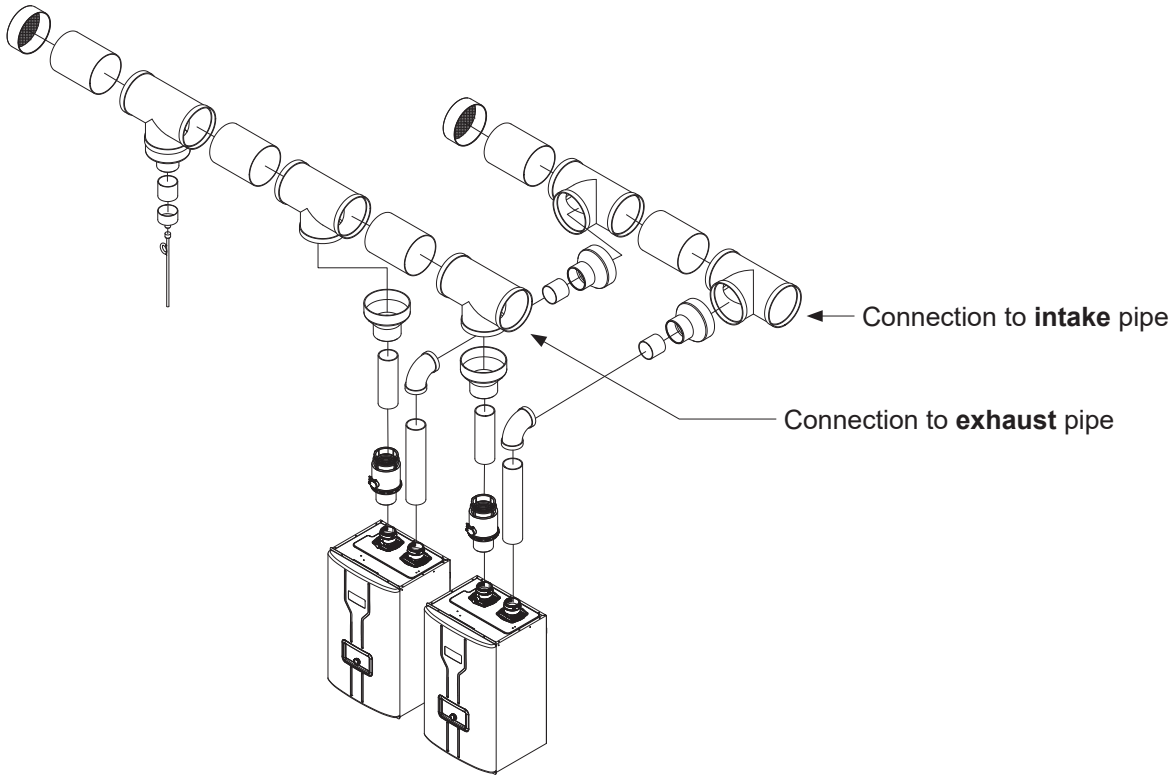

4.9.7 Polypropylene Common venting

Please check the Common venting manual available at the website.

4.10 Gas Supply and Piping

Gas piping should be supported by suitable hangers or floor stands, not the appliance.

Review the following instructions before proceeding with the installation.

1. Verify that the appliance is fitted for the proper type of gas by checking the rating plate. For a different gas type than on the rating plate, see Section 4.10.1 Gas Conversion. GR Series water heaters will function properly at elevations up to 10,000 feet (3050 m). Refer to Section 4.12 for High Altitude Settings.
2. Refer to Table 7, Table 8, and Table 9 for sizing piping.
3. For minimum and maximum gas supply pressures, see Table 10.
4. Run gas supply line in accordance with all applicable codes.
5. Locate and install manual shutoff valves in accordance with state and local requirements.
6. A sediment trap must be provided upstream of the gas controls.
7. All threaded joints should be coated with piping compound resistant to action of liquefied petroleum gas.
8. The appliance and its individual shutoff valve must be disconnected from the gas supply piping during any pressure testing of that system at test pressures in excess of 1/2 PSIG (3.45kPa).
9. The unit must be isolated from the gas supply system by closing its individual manual shutoff valve during any pressure testing of the gas supply piping system at test pressures equal to or less than 1/2 PSIG (3.45kPa).
10. The appliance and its gas connection must be leak tested before placing it in operation.
11. Purge all air from gas lines.
12. Note if using 1/2" Gas line a maximum of 24 equivalent feet is allowed.
    Follow the local Gas Code and Section 4.11 Gas Supply Pressure, Table-10 Minimum and Maximum Inlet Gas Line Pressures. The inlet gas pressure must be measured when all connected gas appliances are in operation.

⚠ WARNING:

Open flame can cause gas to ignite and result in property damage, severe injury, or loss of life.

NOTE: The GR Series appliance and all other gas appliances sharing the gas supply line must be firing at maximum capacity to properly measure the inlet supply pressure. The pressure can be measured at the supply pressure port on the gas valve. Low gas pressure could be an indication of an undersized gas meter, undersized gas supply lines and/or an obstructed gas supply line.

SCHED 40 METAL PIPE CAPACITY FOR 1.50 SPECIFIC GRAVITY UNDILUTED PROPANE			
NOMINAL PIPE SIZE @ 11" W.C. INLET AND 0.5" W.C. PRESSURE DROP			
SIZE	1/2"	3/4"	1"
LENGTH	MAXIMUM CAPACITY IN THOUSANDS OF BTU PER HOUR		
20	200	418	787
40	-	287	541
60	-	231	434
80	-	197	372
100	-	175	330

NOTES: 1. Follow all local and national propane gas codes for line sizing and equipment requirements. 2. Verify that inlet gas pressure remains between 4 and 13 inches of water column before and during operation.
Source: ANSI Z223.1-80 National Fuel Gas Code.

Table 7. Nominal Pipe Size, Propane

SCH 40 METAL PIPE CAPACITY FOR 0.60 SPECIFIC GRAVITY NATURAL GAS			
NOMINAL PIPE SIZE @ 0.30" W.C. PRESSURE DROP			
SIZE	1/2"	3/4"	1"
FT	CUBIC FEET OF GAS PER HOUR		
20	92	190	350
40	-	130	245
60	-	105	195
80	-	90	170
100			

Table 8. Nominal Pipe Size, Natural Gas

EQUIVALENT LENGTHS OF STRAIGHT PIPE FOR TYPICAL SCH 40 FITTINGS			
NOMINAL PIPE SIZE			
FITTING	1/2"	3/4"	1"
LINEAR FEET			
90° ELBOW	3.6	4.4	5.2
TEE	4.2	5.3	6.6

Table 9. Equivalent Pipe Lengths

4.10 Gas Supply and Piping (continued)

- The gas connection fitting on the unit is 3/4" male NPT.
- The supply line must be sized for the maximum output of the water heater model being installed. If there are additional gas appliances from the main supply line, you must measure sizes of the supply line according to the COMBINED total maximum BTU/hr draw for the appliances as if they were all operating at the same time.
- Measure the length of the gas supply line from the gas meter to the Water Heater.
  Use the tables in this manual or refer to the gas line manufacturers sizing information to determine the correct supply pipe size.
- The gas shut-off valve in the gas supply line should be installed close to the unit.
- To facilitate any future maintenance, it is also recommended that an approved gas union fitting be installed in the supply line between the shut-off valve and the 3/4" male NPT connection on the Water Heater.
  1) Install an approved gas line pipe to gas line connection under the Water Heater. Include manual shut off valve and gas union connection, as shown.
  2) Test gas pressure to make sure it meets the minimum standards and does not exceed the maximum standards for the water heater.
  3) Leak test the gas line pipe before placing the unit in operation. Use approved leak detector liquid solutions only to check for leaks.
- Do not operate the water heater until all connections have been completed and the heat exchanger is filled with water.
- Water Heater MUST be installed downstream of the gas meter for adequate gas supply.

Gas line close position	Gas line open position
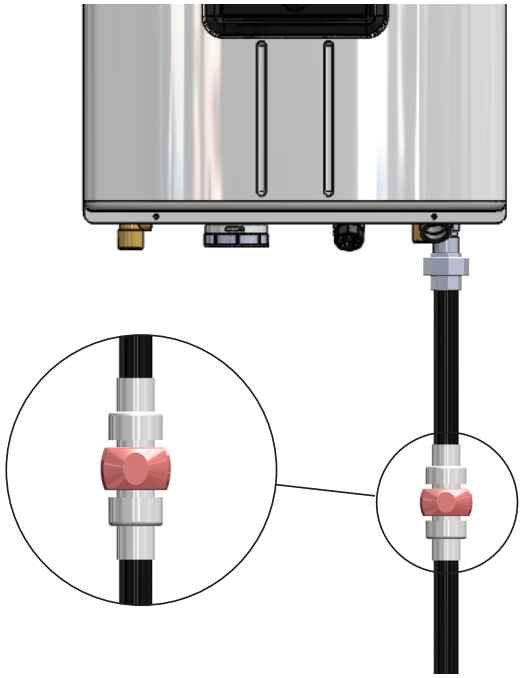	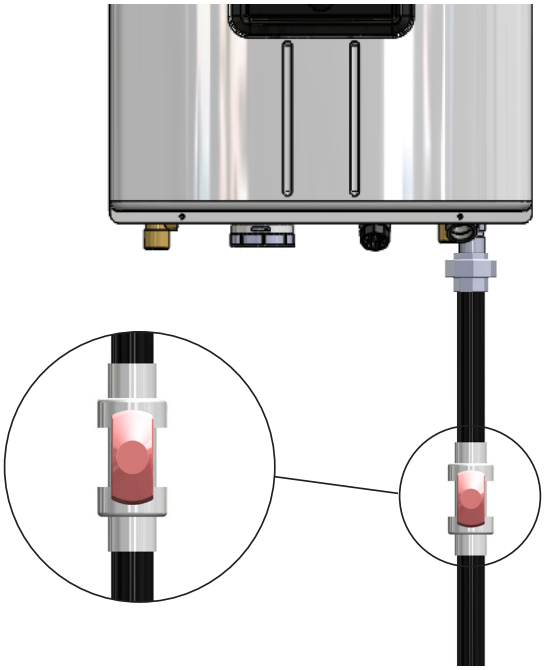

■ Natural Gas piping installation.

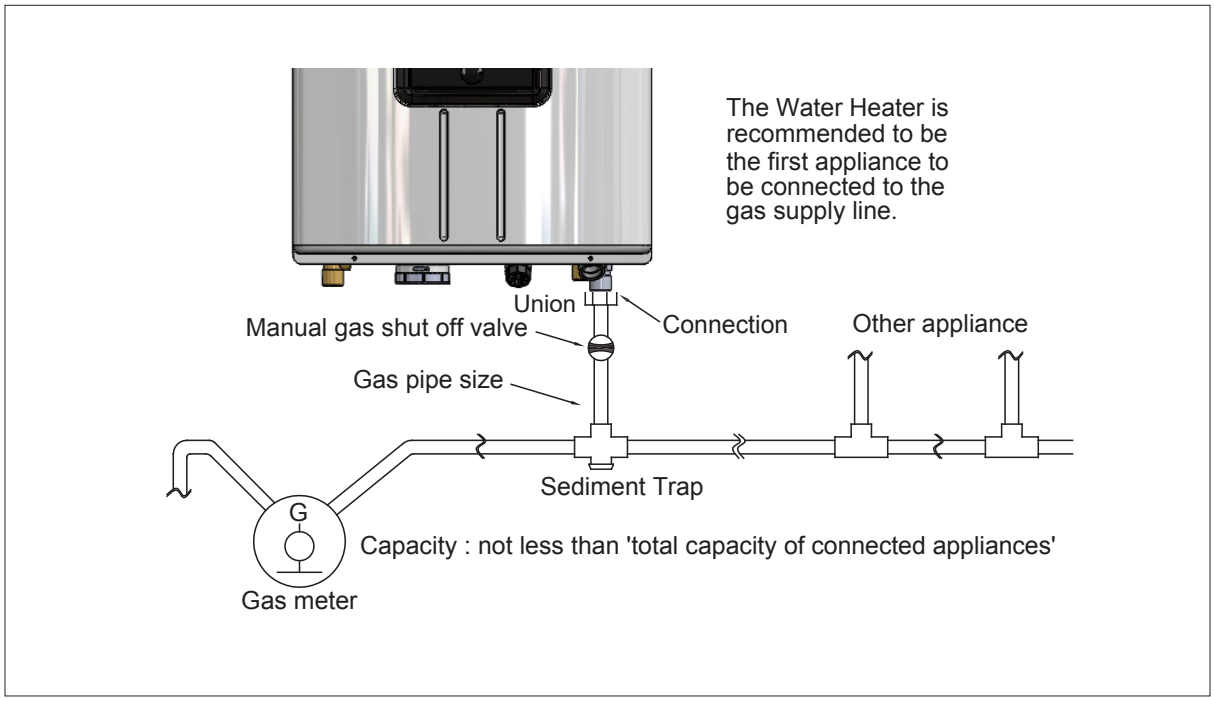

■ Propane gas piping installation.

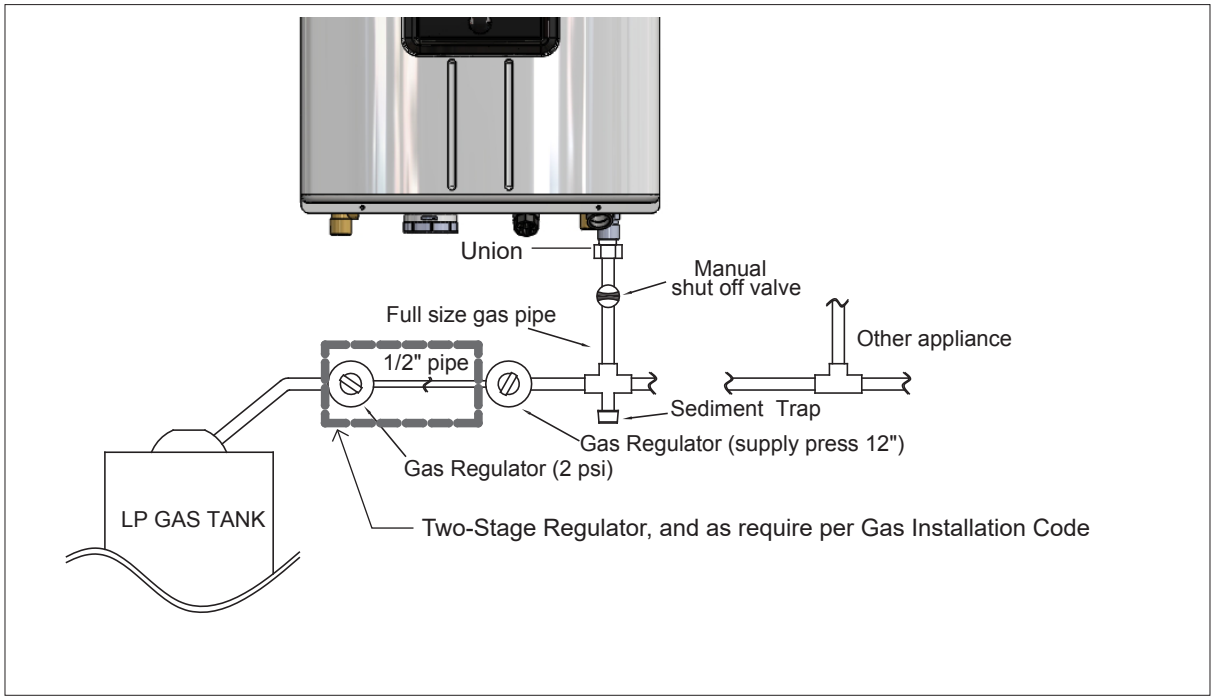

4.10.1 Gas Conversion

To convert to a different gas type than on the Rating Plate, order the NG to Propane Conversion Kit (Part# ST1148) or Propane to NG Conversion Kit (Part# ST1147), and follow the included Conversion Kit Instruction Procedure. For addition information on the conversion kit and procedure, consult with the factory Technical Support. The Gas Conversion Kit contents are listed in chart below.

* Part number
ST1147 : Propane to NG conversion kit
ST1148 : NG to Propane conversion kit

■ Included items in the gas conversion kit

#	Part	Shape	Qty	#	Part	Shape	Qty
1	MIXER ASSY' KIT		1	3	Gas Mixer Packing		1
				4	Gas Conversion Guide		1
2	O-ring (P62)		1	5	Gas Conversion Stickers (English / French)	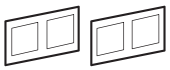	1

4.11 Gas Supply Pressure

■ Refer to the illustration. Check the gas inlet pressure measurement from inlet gas pressure port.(Loosen the port bolts before you check the gas inlet pressure.)

1. The appliance and its individual shutoff valve must be disconnected from the gas supply piping system during any pressure testing of that system at test pressures in excess of 1/2 psi (3.5 kPa).
2. The appliance must be isolated from the gas supply piping system by closing its individual manual shutoff valve during any pressure testing of the gas supply piping system at test pressures equal to or less than 1/2 psi (3.5 kPa).

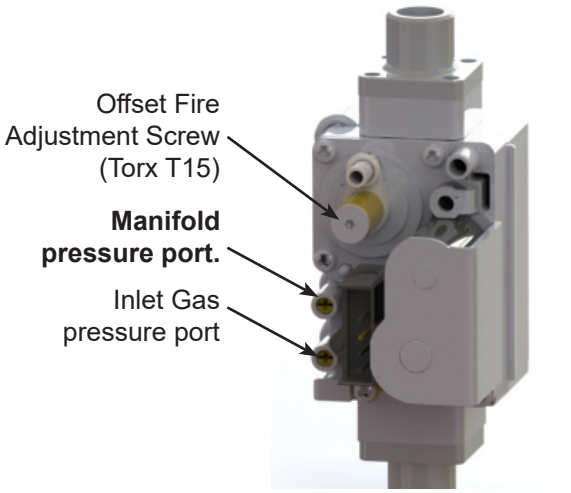

Natural Gas		Propane	
Maximum Pressure	10.5" WC	Maximum Pressure	14.0" WC
Minimum Pressure	3.5" WC	Minimum Pressure	8.0" WC

Table 10. Min and Max Inlet Gas Line Pressures

4.12 Gas Setup and Adjustment

Follow these steps.

1. Establish a call for heat by opening a hot water fixture.
2. Set up your combustion analyzer and place the sensor in the combustion test port.
3. Per Table 15 for Max fire, change dip switch 6 to ON and 7 to OFF. The unit will cycle up to Max fire. Make sure to draw from at least 2 sinks and 2 showers when performing this verification.
4. Wait for your combustion analyzer to stabilize (This may take up to 3 minutes depending on your analyzer). Then measure your CO_2 for Max fire. Refer to Table 11 for acceptable Max fire combustion readings. DO NOT ADJUST CO_2 AT Max FIRE, ONLY AT MIN FIRE.
5. Change dip switch 6 to OFF and 7 to ON. The unit will cycle down to MIN fire.

⚠ WARNING

Installer may be required to verify combustion settings as part of the installation process.
CO should not exceed 200 PPM. Check local codes.
Standard Setting is for MIN Fire. 8.3% ~ 9.5% CO_2 @ 0 - 2,000 ft altitude (Natural Gas).

CO_2 Values		Propane		Natural Gas	
		2" VENT	3" VENT	2" VENT	3" VENT
199K BTU	High fire ± 0.1%	10.7%	10.8%	9.0%	9.1%
	Low fire	9.0% ~ 10.5%		8.3% ~ 9.5%	

Table 11. CO_2 Values

Manifold Pressure		Propane	Natural Gas
		2" or 3" VENT	2" or 3" VENT
199K BTU	Low fire	0.00" ± 0.05" WC	0.00" ± 0.05" WC

Table 12. Manifold Pressures

6. Wait for your combustion analyzer to stabilize. Then measure the CO_2 for MIN fire. Refer to Table 11 for acceptable MIN fire combustion readings.
7. If needed, open the gas valve adjustment port by removing the cap screw with a T15 Star wrench
8. Use the Star wrench to make a minor adjustments; 1/8 of a turn clockwise to increase or 1/8 of a turn counterclockwise to decrease CO_2.
9. It may be necessary to go back and forth between MAX fire and MIN fire several times (making adjustments only at MIN fire) before CO_2 levels are acceptable. Be sure to put the adjustment port cap screw back into the valve when done.
10. Once the CO_2 and manifold pressure measurements for MIN fire are acceptable per Table 12, set dip switches 6 and 7 to the OFF position for nominal fire (normal operation).

4.13 Gas High Altitude Setting (no adjustment is needed below 2000 feet)

The GR Series has been set up at the factory for altitude of less than 2,000 ft, but it may be installed at elevations up to 10,000 ft for use with Natural Gas or Propane. If the installation is at an altitude of greater than 2,000 ft, then altitude settings need to be adjusted in the Installer Mode as describe below.

NOTE: Above 2,000 ft (610 m), the water heater will de-rate by 2-4% for each 1,000 ft (305 m) of altitude gain.

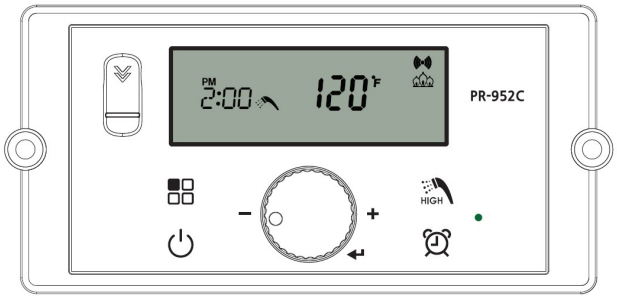

- High Altitude settings (2,000 ~ 10,000 ft)

1. With the Power turned OFF, press the 'Modes button' for 5 seconds to get into the Installer Parameters Mode.
2. Turn the dial until '8:HA' appears.
3. Press the dial.
4. Set the high altitude value by turning the dial. Refer to Table 13 for proper altitude setting.
5. Press the dial again to save the setting.
6. Press the 'Modes button' for one second, to Save the number and to go back to initial status.

8 : HA	Choose the correct value from the following four options.
0 - 2	0 ~ 1,999 ft (0 - 609 m)
2 - 5	2,000 ~ 4,999 ft (610 - 1,523 m)
5 - 8	5,000 ~ 7,999 ft (1,524 - 2,438 m)
8 - 10	8,000 ~ 10,000 ft (2,439 - 3,048 m)

Table 13. Altitude Settings

4.14 Plumbing Guidelines.

- Ensure pipe material is suitable for the local codes and industry standards.
- The pipe must be cleaned and without any debris.
- Do not apply torch heat within 12" of the bottom connections of the unit.
- The size of the hot water pipe should be 3/4″ diameter.
- Isolation valves(Shutoff valve) must be installed per Plumbing Code and good practice for service and maintenance.
- All piping should be insulated.

■ Applicable Backflow Preventer and Thermal Expansion Tank
- Install a backflow preventer valve and Thermal Expansion Tank in the make-up water supply (water Inlet) to the unit as required by local codes.

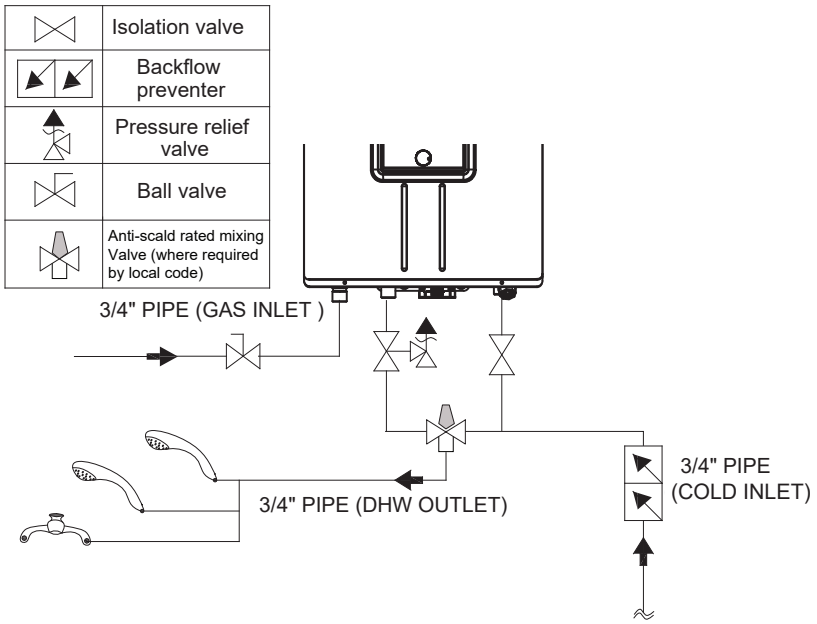

⚠ CAUTION

Scalding Risk: The use of an anti-scald mixing valve at the hot water outlet (water heater location) can reduce potential for scalding.
The maximum hot water supply temperature at Point-of-Distribution and/or Point-of-Use, anti-scald device/thermostatic mixing valve at plumbing fixture or integral to the bathroom fixtures are dictated by the Plumbing Code and Health & Safety Code.

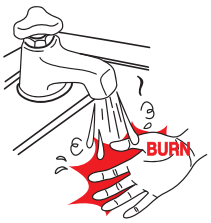

Important note:
Pipe Size & DHW Recirculation Loop

■ Use the MINIMUM pipe size for all Water Heater loop piping

■ Domestic hot water pipe minimum size: 3/4"
When using external recirculation mode with the built-in pump, observe the following maximum recirculation pipe lengths including fittings (3/4" pipe is recommended):
· 3/4" Pipe 500' (150m) of equivalent length
· 1/2" Pipe 200' (60m) of equivalent length
Lengths in excess of these limits will require an external recirculation pump.

⚠ CAUTION

A pressure relief valve (PRV) must be installed immediately at water heater outlet with no valves between.

⚠ ATTENTION

A soupape de surpression (PRV) doit être installé immédiatement à sortie chaudière avec pas de vannes entre.

4.14 Plumbing Guidelines (continued)

Water Quality

Potable water is defined as drinkable water supplied from a utility or from a well, in compliance with EPA secondary maximum contaminant levels (40 CFR Part 143.3) as shown in Table 14. Water quality must be within these maximum allowable parameters. If your water contains contaminants in quantities greater than outlined by EPA, then water treatment is required and additional maintenance may also be required. If you suspect that your water is contaminated in any way, discontinue use of the appliance and contact a qualified technician.

Contaminant	Maximum Allowable Level	Contaminant	Maximum Allowable Level
Total Hardness	200 mg/l (12 grains/gallon)	Manganese	0.05 mg/l
Aluminum	0.05 to 0.2 mg/l	pH	6.5 - 8.5
Chloride	250 mg/l	Sulfate	205 mg/l
Copper	1 mg/l	Total Dissolved Solids (TDS)	500 mg/l
Iron	0.3mg/l	Zinc	205 mg/l

Table 14. Water Quality Specifications

4.15 Re-Circulation Setting

■ Select Water Heater Mode (RTGR199N1, RTGR199X1)

Mode	Description	Setting	Requirement		Performance		
		9:RC	Dedicated Return Line	Accessory	Wait Time Water Savings	Energy Savings	Hot Water Temperature
No Recirculation	Same as regular tankless water heaters.	OFF	No	-	-	-	-
Internal	Hot water without dedicated return line.	Itnl	No	-	Better	Better	Better
External*	Quick hot water with dedicated return line.	Etnl	Yes	-	Best	Better	Best
On demand / TT24	Only operates recirculation line with a push of a button.	tt24	Yes	Requires **ST1239**	Better	Best	Best
Crossover*	Quick warm water without dedicated return line.	CrOS	No	Requires Thermostatic Crossover Valve	Best	Good	Warm

* Recirculation is activated by Timer [Auto / Manual]. **See Section 5.2 for Setting the Timer.**

Recirculation timer setting can be changed by customer's own desire time.
Auto (self learning mode) function can be selected by customer's need.
When “CrOS” is selected for 9:RC, the re-circulation setting, self learning mode will be disabled. “Auto” will be disabled and not shown on the menu.

Recirculation Modes : Internal Mode / External Mode / On-Demand Mode / Crossover Mode.
To select a recirculation mode, you must set from the ‘Installer Mode’ on the Display panel.
(Refer to Section 5.6)
When you use a recirculation mode, there will be some minor efficiency loss, as a result of the water heater maintaining a steady temperature within the recirculation loop.
With the recirculation operation, hot water will be automatically circulated in the hot water pipes. Even with this function activated, it may take several minutes for hot water to be completely circulated through the plumbing system. Set the timer to activate the recirculation system prior to the first use of hot water to ensure hot water is available.
This water heater has a built-in pump and temperature sensor.

CHECK VALVE	STRAINER	SHUTOFF VALVE	UNION
GAS BALL VALVE	SERVICE 3-WAY ISOLATION VALVE	SERVICE 3-WAY ISOLATION VALVE W/PRV PORT	EXPANSION TANK
TT24 sensor	THERMOSTATIC CROSSOVER VALVE	FAUCET	CIRCULATOR PUMP
PRESSURE RELIEF VALVE			

Piping Symbol Legend

Note: Piping diagram depicts field supplied Tankless Isolation Service Valves on cold water and hot water piping. Refer to Section 8.1, Flushing the Water Heater on their use.

No Recirculation Mode, Internal Recirculation Mode

1. Only POTABLE water may be plumbed through the water heater.
2. The water heater cannot be used for space heating applications.
3. Expansion tank is required if a backflow preventer is installed.

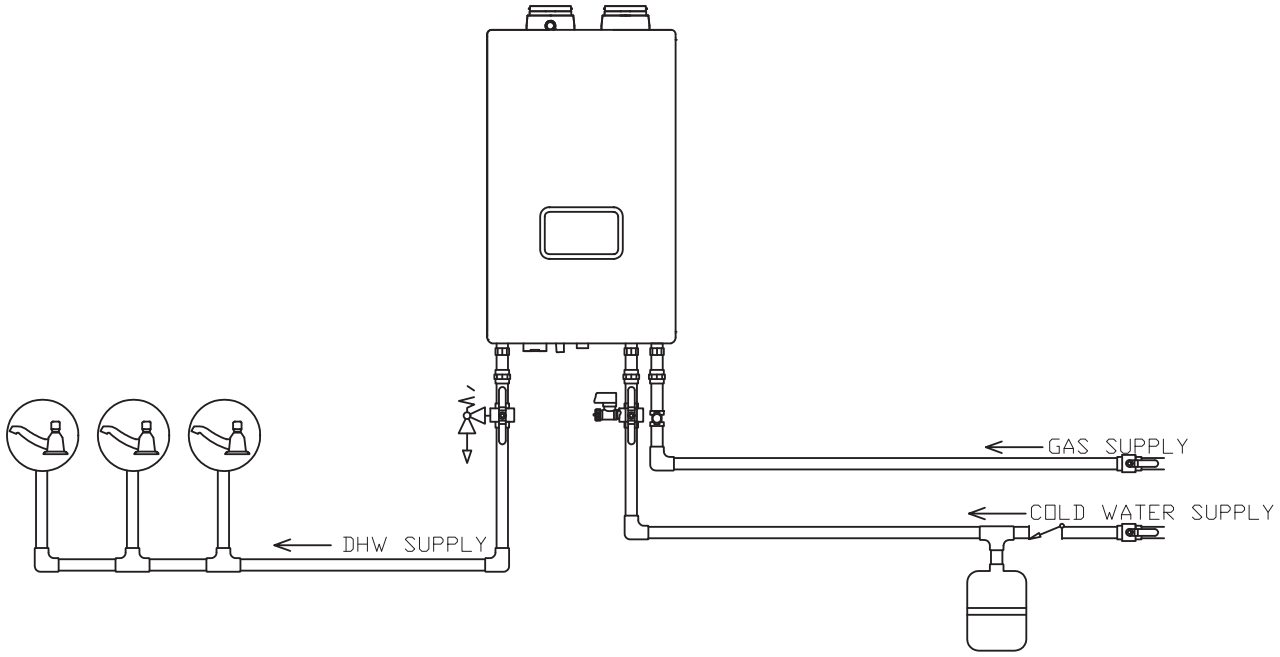

Recirculation Mode

[External Mode]

- **Provides most comfortable option. Maintains consistent hot water availability during specified times.**
- **Timer can be manually customized or programmed to automatically learn daily usage patterns.**
- **Ability to optimize by using Installer Mode function 10:RT to adjust loop temperature for maximum comfort and safety.**

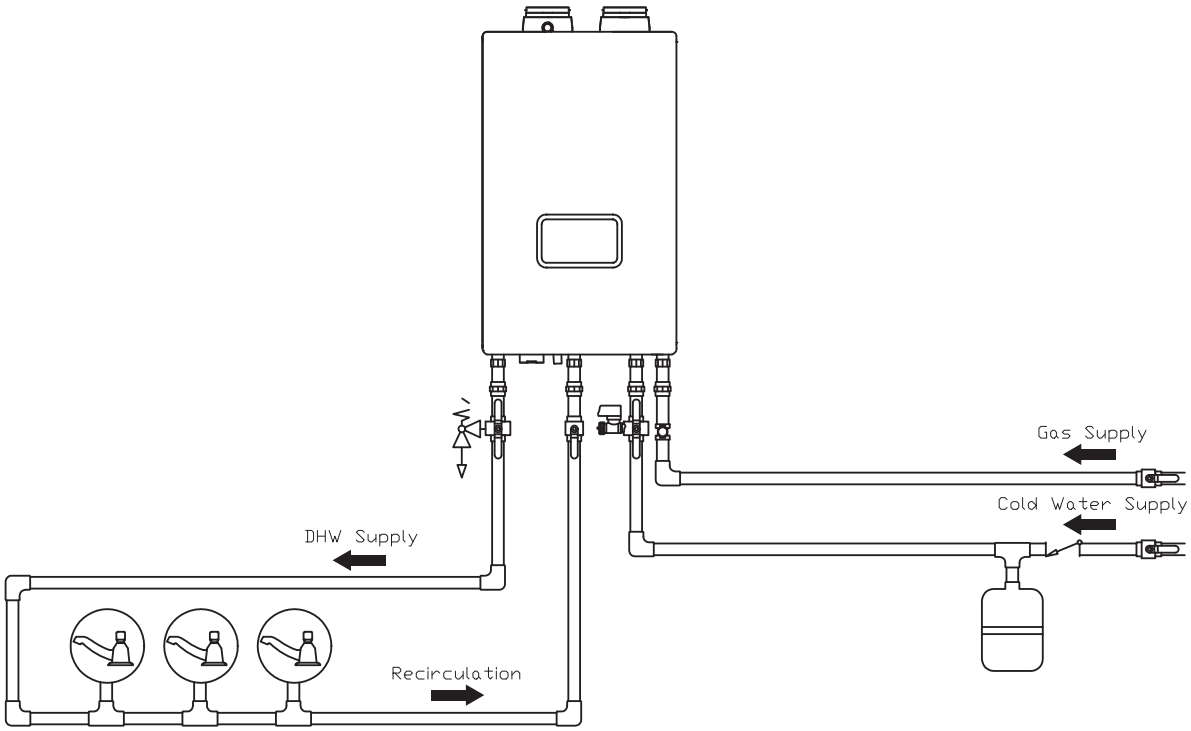

Dedicated Return Line	Accessory	Setting	Maximum Loop Length		Controlled by
		9 : RC	1/2"	3/4"	
YES	-	ON	200' (60m)	500' (150m)	Timer*

* See Section 4.17.1 for Setting the Timer

The recirculation pipe must be installed in the field in order to apply the 'External Mode'. This mode allows the water heater recirculation pipes to be warmed up and serving as the freeze protection function.

Recirculation Mode

[On Demand(tt24) Mode]

- **Provides best energy savings option**
- **Designed to meet California Title 24 requirements.**
- **Recirculation will only operate when the push button switch is pressed. Hot water will not be available immediately.**
- **Built-in timer function is disabled**
- **Will start circulation pump on-demand to purge cold water from the water lines and replace with hot water.**
- **Pump will stop operating once hot water has successfully reached 102°F at the installed temperature sensor.**
- **Do not repeatedly press on-demand button. On-demand function will not operate if the water in the line is already warm.**

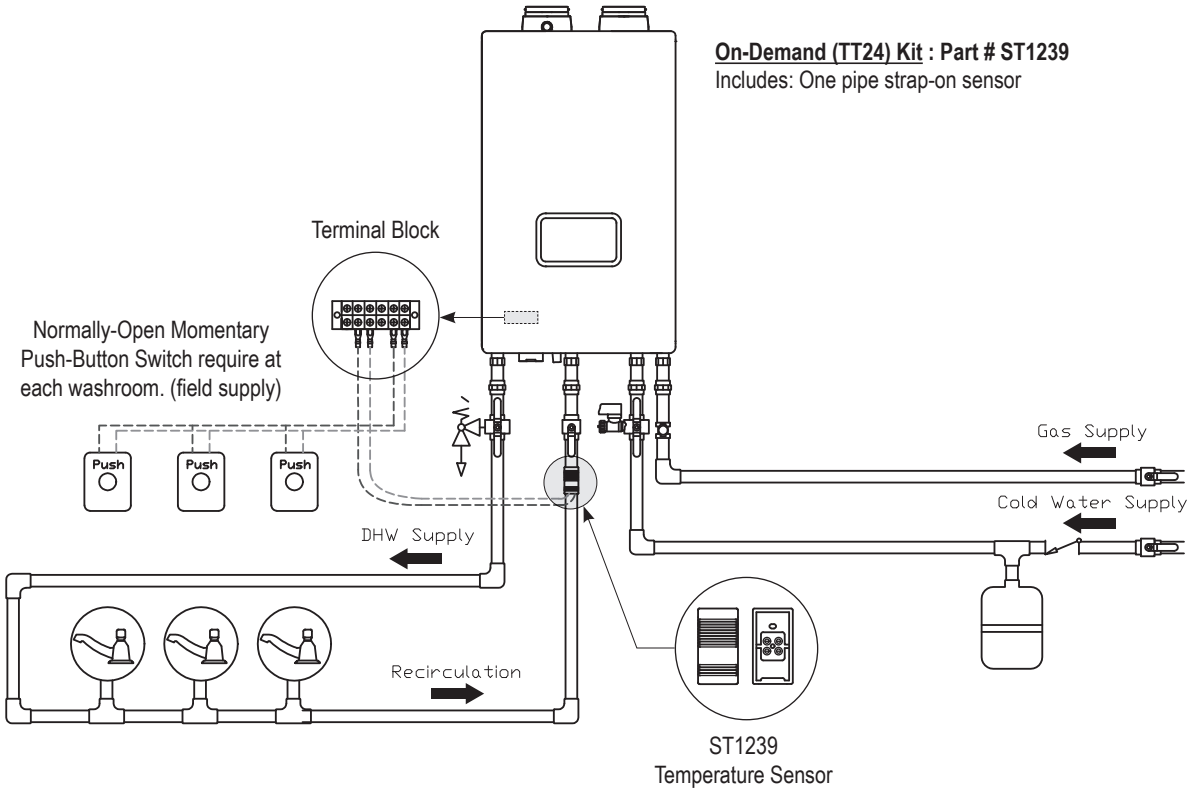

Dedicated Return Line	Accessory	Setting	Maximum Loop Length		Controlled by
		9 : RC	1/2"	3/4"	
YES	Suface Temperature Sensor	tt24	200' (60m)	500' (150m)	Push Button Switch

Recirculation Mode

[Crossover(CrOS) Mode]

- **Provides recirculation option for homes without a dedicated return line by utilizing the cold water line as a return line.**
- **Timer can be manually customized. Self learning mode, “Auto” will be disabled and not shown on the menu.**
- **In order to prevent hot water from being supplied into the cold water line, the thermal element in the crossover valve will close at 95°F.**
- **Refer to specific Thermostatic Crossover Valve manufacturer's specifications.**

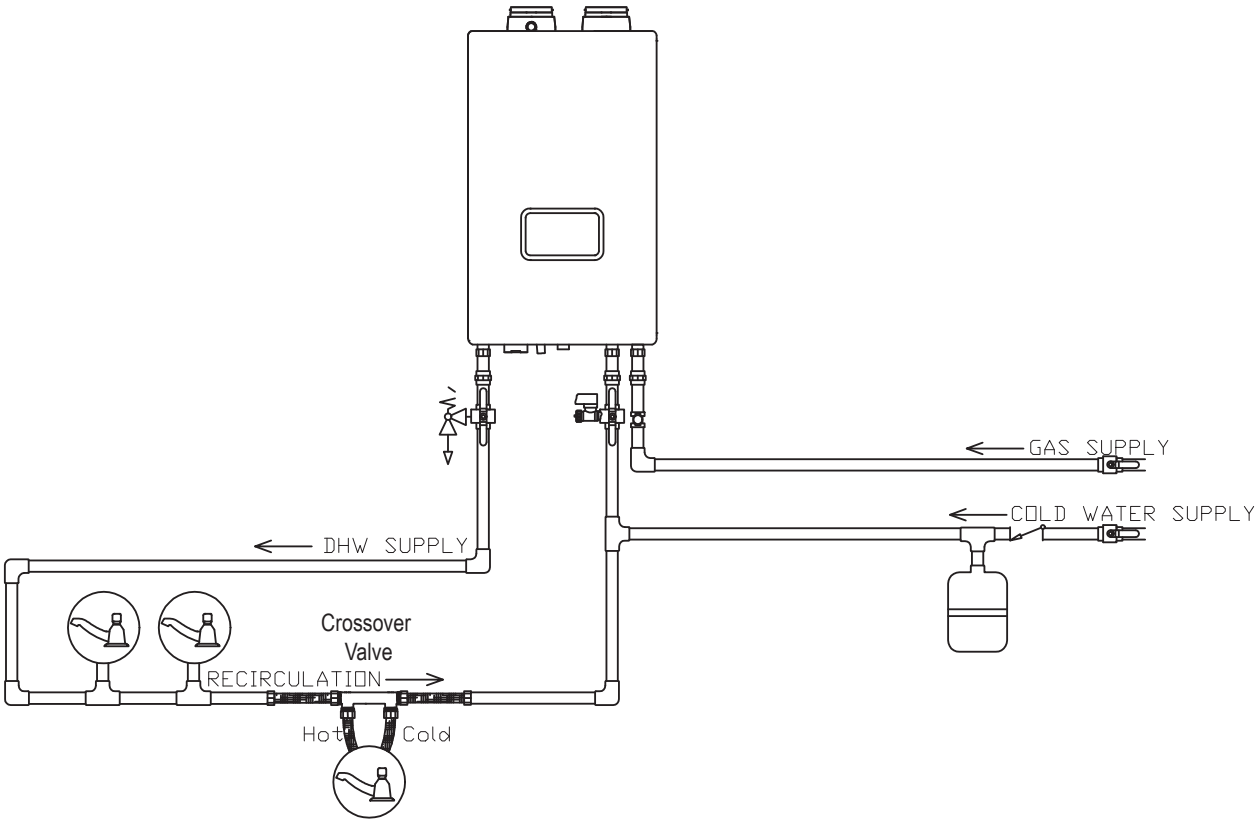

Dedicated Return Line	Accessory	Setting	Maximum Loop Length		Controlled by
		9 : RC	1/2"	3/4"	
NO	Crossover Valve	CrOS	200' (60m)	500' (150m)	Timer*

* See Section 4.17.1 for Setting the Timer

4.16 Air Handler Setting

1. Water heater receives signal from the Room Thermostat and it will control the Air Handler unless the flow detects domestic hot water.
2. This mode prevents simultaneous operation of DHW and heating to eliminate cold drafts during heating or lower water temperature during showers uses.
3. If no heating calls occur for extended periods, the pump will operate during the AntI on time for preventing bacteria in the heating pipe.

Main	Sub	
7:AH	Eco	Enable to Air Handler Mode
	Anti	Anti - Bacterial Mode oFF - Standby Time on - Operation Time

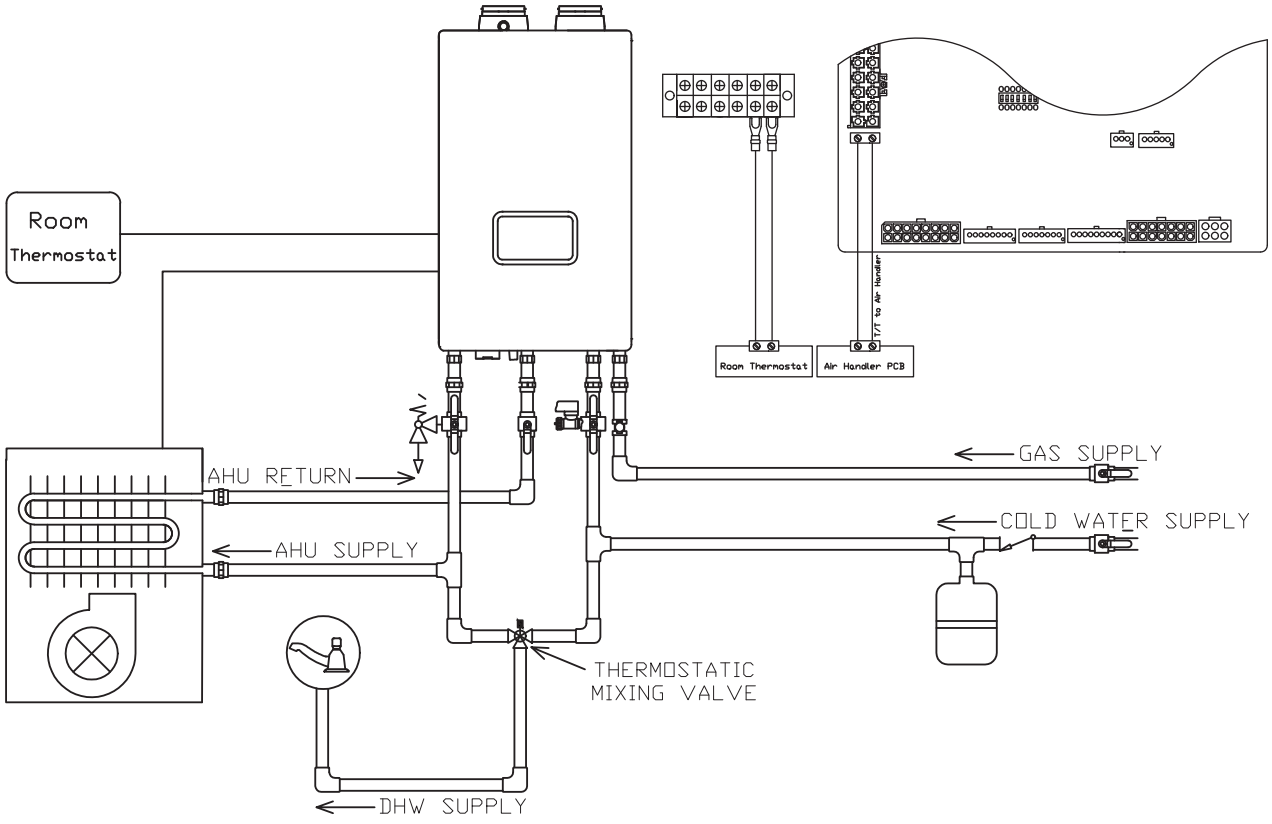

4.17 Setting the Display Panel

Setting the internal Clock

►To use the '**Recirculation Timer**', the device's internal clock should be adjusted to the current time.
Clock settings can be set in the 'User Mode'. See Section 5.2 for Timer Setting.

[To enter '**User Mode**']

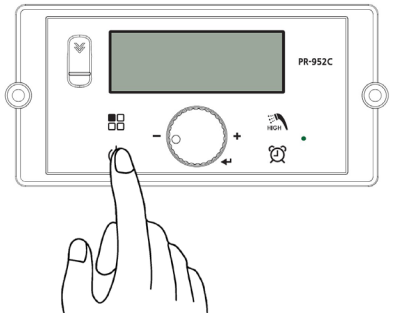

Power on the display panel must be on.

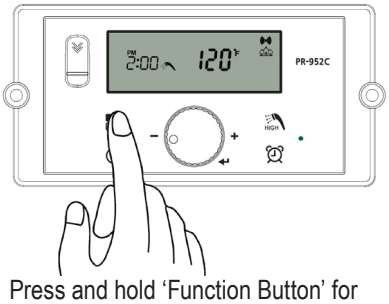

Press and hold 'Function Button' for approximately 5 seconds to enter 'User Mode'.

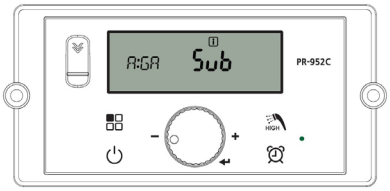

[A:GA] is displayed on the display screen. From here, turn the 'Dial Button' to scroll through the setting.

· Set in [J:TA] after turning the 'Dial Button' in 'User Mode'.
· Set the HOUR - MINUTE in regular sequence..

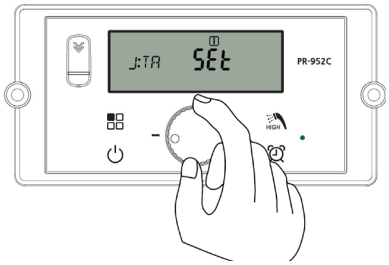

Turn the 'Dial Button' clockwise until [J:TA] is displayed.

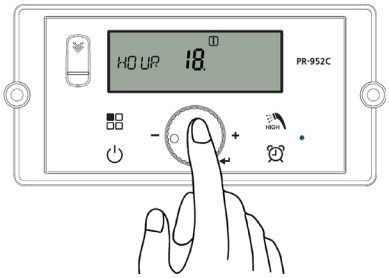

Enter the Clock 'Setting mode' by pressing 'Dial Button' when flashing the [J:TA] character.

Customer can set the current time in [J:TA].

1. Setting hour : 18 (6 PM)
(Setting in 24-Hr Format)

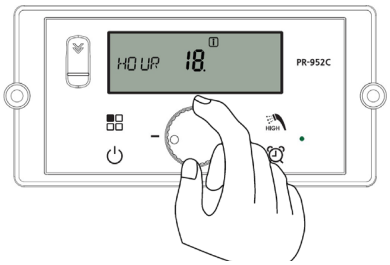

Set the 'HOUR' by turning the 'Dial Button'.
(Only the flashing number can be changed.)

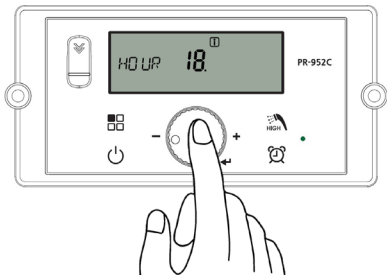

Press the 'Dial Button' to store the setting.

2. Setting minute : 10

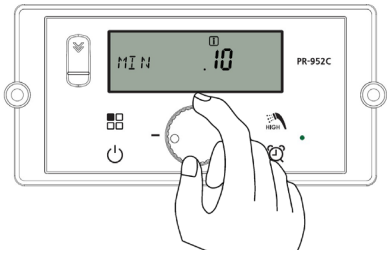

Set the 'MIN' by turning the 'Dial Button'.
(Only the flashing number can be changed.)

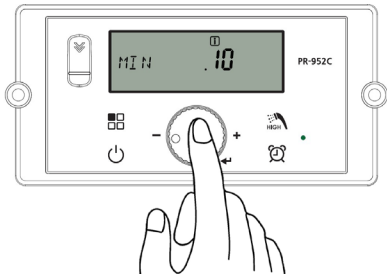

Press the 'Dial Button' to store the setting.

3. Press 'Function Button ( )' to return to normal operation mode.

To set the recirculation mode (Internal, External, On-Demand, Crossover)

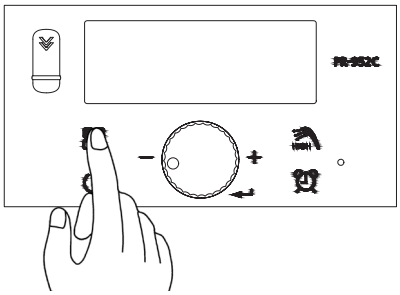

1. Press the 'Power Button' OFF. ('Display Screen' will be blank)
2. Press and hold the ‘Function Button’ for approximately 5 seconds to get into the ‘Installer Mode’.

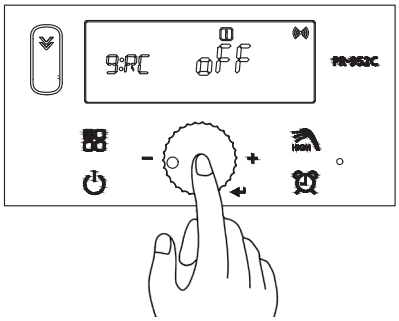

3. ‘1:EH’ oFF will appear on the ‘Display Screen’. Rotate the dial clockwise until ‘9:RC’ oFF is shown.
4. Press the ‘Dial Button’ and ‘oFF’ will start blinking.

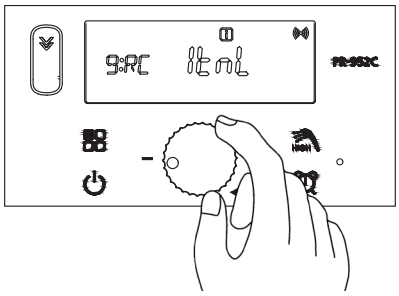

5. Turn the ‘Dial Button’ until ‘ItnL’ is displayed.
   ※ 'ItnL' is for Internal Mode
   ※ 'EtnL' is for External Mode.
   ※ 'tt24' is for On-Demand Mode.
   ※ 'CrOS' is for Crossover Mode.

Verify which type of Recirculation System is installed. (See Section 4.15)

6. Press the 'Dial Button' until 'ItnL', 'EtnL' or 'tt24' or 'CrOS' is blinking. Turn the 'Dial Button' to the desired mode.
7. Press the 'Dial Button' to save the setting.
8. Press the 'Function Button' to exit Installer Mode.
9. Press the 'Power Button' to turn the water heater back on.

Mode	Screen Display	Description	Setting	Requirement		Performance		
			9:RC	Dedicated Return Line	Accessory	Wait Time Water Savings	Energy Savings	Hot Water Temperature
Internal	ItnL	Hot water without dedicated return line.	Itnl	No	-	Better	Better	Better
External*	EtnL	Quick hot water with dedicated return line.	Etnl	Yes	-	Best	Better	Best
On demand / TT24	tt24	Only operates recirculation line with a push of a button.	tt24	Yes	Requires **ST1239**	Better	Best	Best
Crossover*	CrOS	Quick warm water without dedicated return line.	CrOS	No	Thermostatic Crossover Valve	Best	Good	Warm

► Table for ‘Recirculation Timer’ setting.

‘Recirculation Timer’ function has three settings ([Act], [SEt], [cLr]). [Act] is to activate the ‘Recirculation Timer’, [Set] is to customize the times appropriate to the end user and [cLr] is to reset to factory default the setting.

To activate the ‘Recirculation Timer’ Type.		
Act	Prog	Program mode. Select the custom program from recirculation timer mode. Must be set in ‘SEt’ first. (See below for details)
	Auto	Auto mode. Unit memorizes the user’s hot water usage patterns. (Self learning mode) Uses info to generate setting. Refer to the page 63 for details. When “CrOS” is selected for 9:RC, the re-circulation setting, “Auto” will be disabled and not shown on the menu.

To set the ‘Recirculation Timer’.		
SEt	Prog	Customized end user’s desired recirculation times. Refer to the page 63~65 for details.

To clear ‘Recirculation Timer’.		
cLr	Prog	Reset to factory default. (5 to 8 AM, 5 to 11 PM) Refer to the page 66 for details. 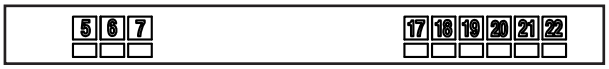
	Auto	

Setting the ‘Recirculation Timer’ (Only RTGR199N1 / RTGR199X1)

4.17.1 Set the ‘Recirculation Timer Type’ to ‘Auto’.

[Auto Function] :
If flame is detected by customer usage, that time is stored. The following day, the water pattern from the previous day is used to control the pre-heat and provide prompt hot water.

Note: When "CrOS" is selected for 9:RC, the re-circulation setting, "Auto" will be disabled and not shown on the menu.

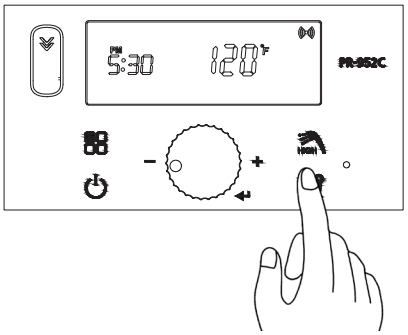

1. Press the ‘Recirculation Timer Button’ when power of the display screen is turned on.

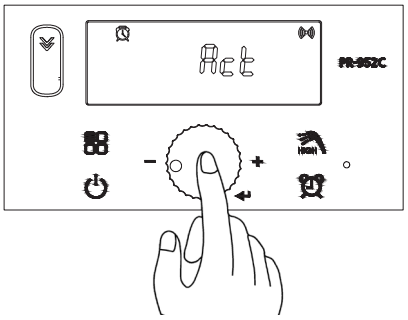

2. ‘Recirculation Timer Icon’ and [Act] are flashing on display screen. Press the ‘Dial Button’ to activate the ‘Recirculation Timer’ function.

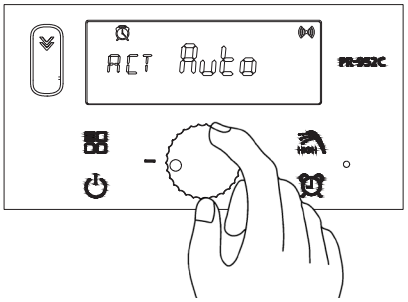

3. Select the [Auto] by turning the ‘Dial Button’ counterclockwise to set the auto mode. Then press the ‘Dial Button’ to set.

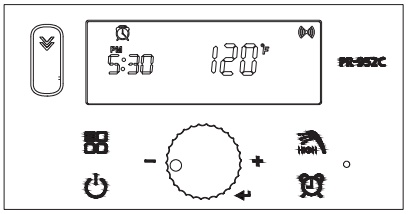

4. Recirculation function is operated from next day after automatically recognizing the user’s patterns when auto recirculation function is selected.

4.17.2 Set the ‘Recirculation Timer’ in ‘Prog’ mode.

- Customer can directly set the time in ‘Recirculation Mode’.

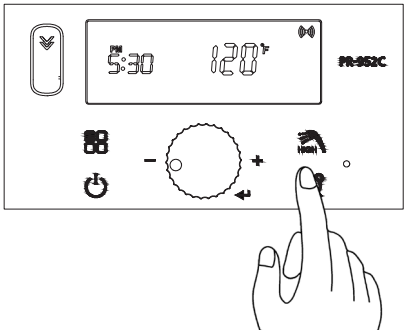

1. Press the ‘Recirculation Timer Button’ while power of the display screen is turned on.

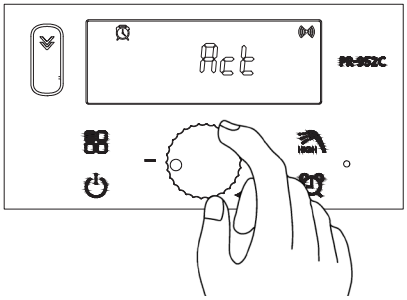

2. If [Act] is flashing, select the [SEt] by turning the ‘Dial Button’.

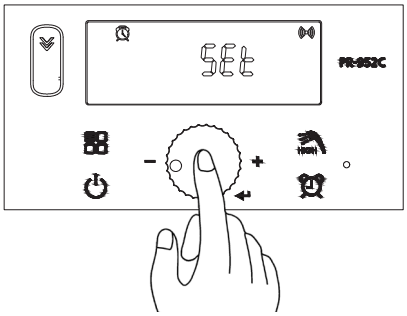

3. Press the ‘Dial Button’ to enter the ‘Setting Mode’.

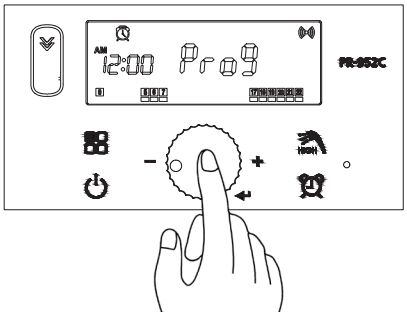

4. Press the ‘Dial Button’ to set the desired time zone.(The default time zone are saved and can be changed to the desired time zone.)

Time is displayed from 12:00. Turn the ‘Dial Button’ clockwise, time on the display screen is changed in increments of 30 minutes. To set the desired time zone, move to the start time of the desired time zone, press the ‘Dial Button’ to set it, turn the ‘Dial Button’ to the desired end time, and press ‘Dial Button’ to save the time zone area.

Press the ‘Dial Button’ at the desired time zone, turn the ‘Dial Button’, and press the ‘Dial Button’ at the end of the desired time to complete the selection.

ex) Setting time : 1:00~2:30

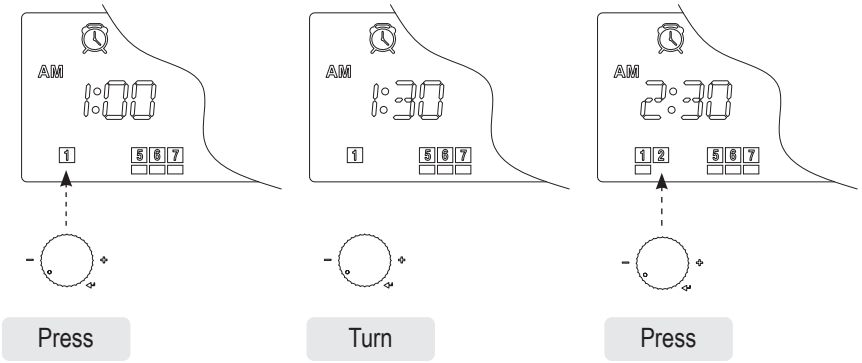

ex) Setting time : am 1:00 ~ 2:30 , AM 11:00~PM 2:30 (default time : AM 5:00~8:00, PM 5:00~11:00)

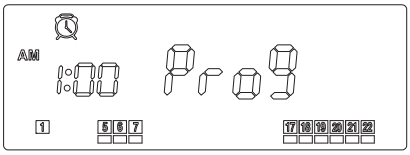

5. Press the 'Dial Button' after locating the desired start time. (AM 1:00 ~)

Dial Button

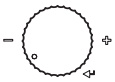

Press

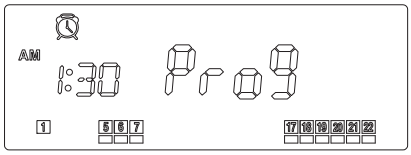

6. When you press the 'Dial Button', the clock time increases by 30 minutes. Turn the 'Dial Button' to ending time. (~ AM 2:30)

Dial Button

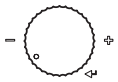

Turn clockwise

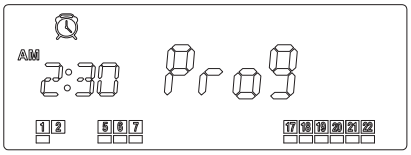

7. Press the 'Dial Button' after locating the 'Dial Button' by desired time. (AM 1:00 ~ 2:30)

Dial Button

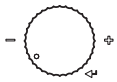

Press

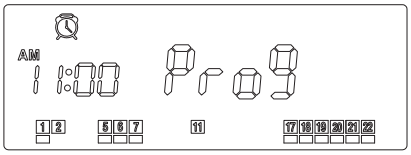

8. Press the 'Dial Button' after locating the desired start time.(AM 11:00 ~)

Dial Button

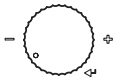

Turn clockwise

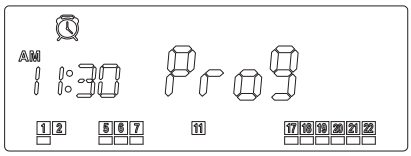

9. When you press the 'Dial Button', the clock time increases by 30 minutes. Turn the 'Dial Button' to ending time. (~ PM 2:00)

Dial Button

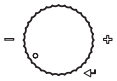

Turn clockwise

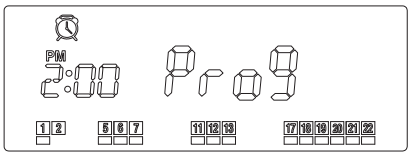

10. Press the 'Dial Button' after locating the 'Dial Button' by desired time. (AM 11:00 ~ PM 2:00)

Dial Button

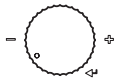

Press

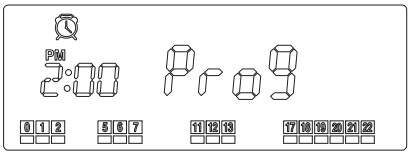

11. If you no longer need to set the time, press and hold the 'Dial Button' for approximately 2 seconds to store.

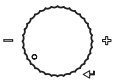

Hold for 2 sec

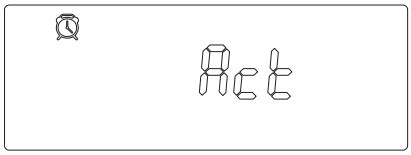

12. If all of settings are stored, 'Act' will be flashing. Press the 'Dial Button'.

Dial Button

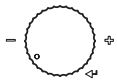

Press

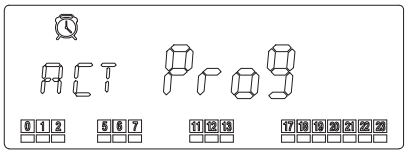

13. Saved program from step 11 will flash on screen. If correct, press the 'Dial Button' to complete programming.

Dial Button

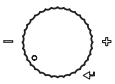

Press

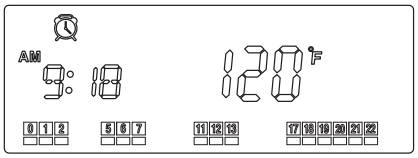

14. Programming done.

[TIP for the 'Recirculation Timer']
- Press the 'Dial Button' (less than 1 second) : Selecting a start time and an end time
- Turn the 'Dial Button' : Selecting a number of times
- Press and hold the 'Dial Button' (more than 2 seconds) : Save new timer setting

If you want to delete the selected time zone, move to the time zone you want to delete and press the 'Dial Button'.

4.17.3 Recirculation function initialization setting

- Reserved contents can be initialized.

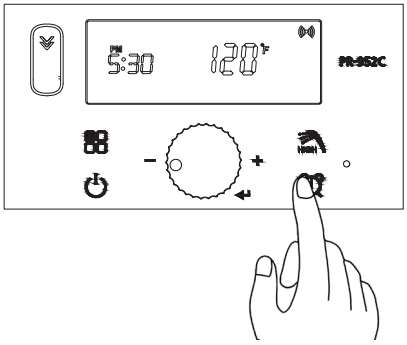

1. Press the 'Recirculation Timer Button' when display screen is turned on.

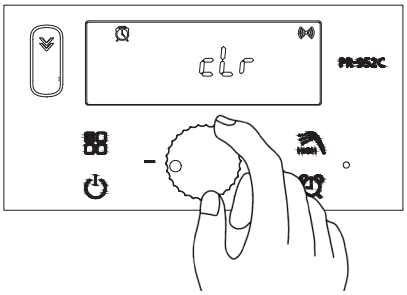

2. [Act] is flashing on display screen. Turn the 'Dial Button' clockwise to select the [cLr] .

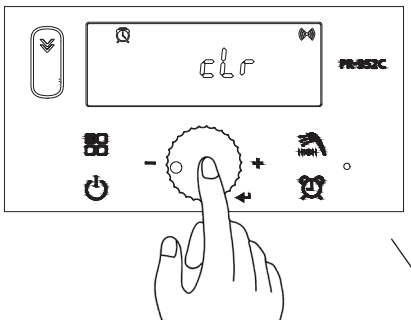

3. Press the 'Dial Button' when [cLr] is flashing on display screen.

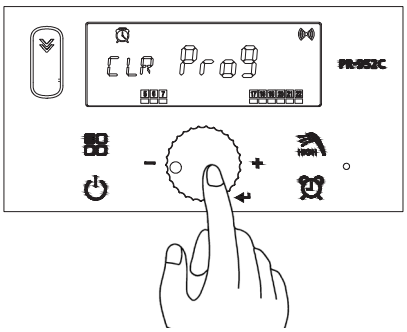

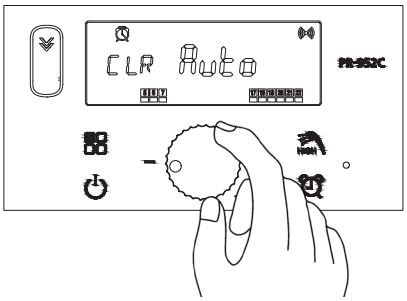

4-1 Press the 'Dial Button' to initialize the program recirculation setting when either [Prog] or [Auto] is flashing on the display screen. All recirculation timers get deleted except default timer.

4-2 Press the 'Recirculation Timer Button' to return to the previous step after setting completion

Vacation Mode

If no hot water is used for more than 30 hours, tthe Vacation mode will be activated and all the recirculation program will be stopped and display icon until the Vacation mode is deactivated. Vacation Mode can be deactivated by using the hot water for more than 3 seconds or simply pressing any button on the display.

4.18 Disposal of Condensate

- High efficiency gas condensing Water Heaters create condensation when operating. Condensation has acidic (pH) of approximately 4-5.

- Condensate must be drained in accordance with all local regulations. Follow your local code with regards to the disposal of condensation.
  One of 3 disposal methods must be followed
  1. **to floor drain**
  2. **to neutralizer drain (optional kit *)**
  3. **to condensate pump (field supplied)**

- If a neutralizer is installed, periodic replacement of the lime stone (or neutralizing agent) will be required. The rate of depletion of the lime stone varies upon usage of the Water Heater.
  During the first year of operation, please check the neutralizer every few months for depletion.

- Apply only corrosion-resistant materials for the condensate drain lines such as 1/2″ PVC, CPVC, Polypropylene pipe.

⚠ NOTICE

Category IV water heaters must be installed with a means provided for the drainage of condensate.

⚠ AVIS

Catégorie IV chauffe-eau doit être installé avec une moyens prévus pour l'évacuation des condensats.

⚠ CAUTION

Condensate is mildly acidic (pH=5), and may harm some floor drains and/or pipes, particularly those that are metal. Ensure that the drain, drainpipe, and anything that will come in contact with the condensate can withstand the acidity, or neutralize the condensate before disposal. **Damage caused by failure to install a neutralizer kit or to adequately treat condensate will not be the manufacturer's responsibility.**

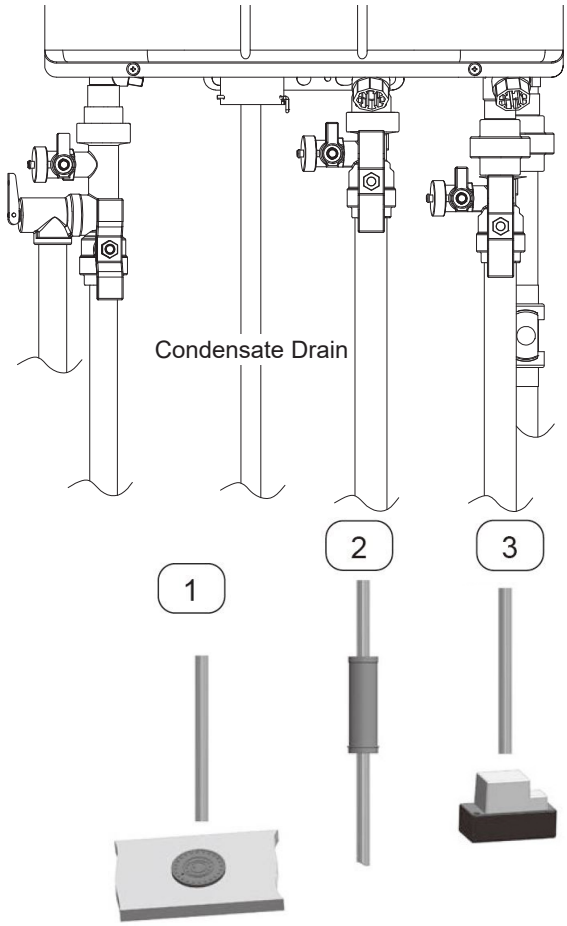

4.19 Pressure Relief Valve

⚠ WARNING

- An approved 'Pressure Relief Valve' must be installed in this installation. The Valve must be an approved ASME HV Relief Valve, installed on the DHW supply line for domestic hot water loop as close to the unit as possible.
  (Valve size 3/4", maximum 150psi).

Note: The heater diagram depicts field supplied Tankless Isolation Service Valves on the DCW and DHW piping. Typical Hot/Supply Isolation Service valve has a PRV port.

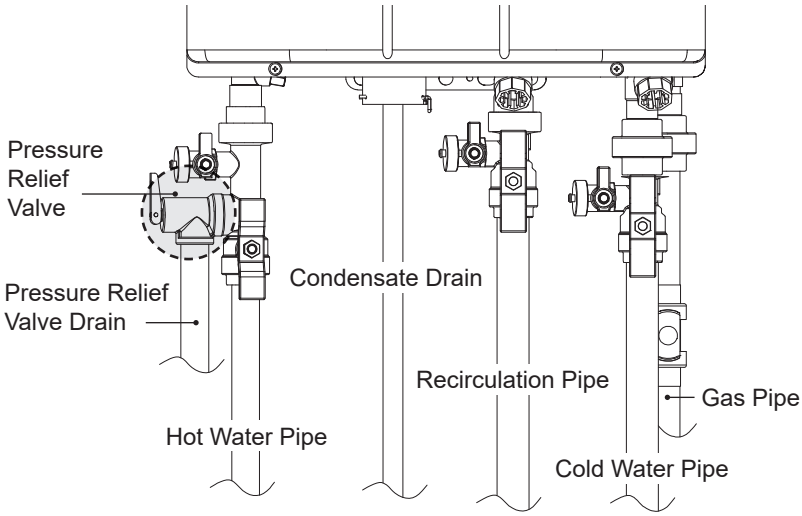

4.20 Electrical Wiring Connections

⚠ WARNING

- Install wiring and electrically ground Water Heater in accordance with authority having jurisdiction or in the absence of such requirements follow the National Electrical Code, NFPA 70, and/or CSA C22.1 Electrical Code-Part 1 in Canada.
- ELECTRICAL SHOCK HAZARD — For your safety, turn off electrical power supply at service entrance panel before making any electrical connections to avoid possible electric shock hazard. Failure to do so can cause severe personal injury or death.

- This appliance must be electrically grounded per local codes. Ensure the electrical receptacle, in which the water heater will be plugged into, is properly grounded; if wiring directly.
- Do not attach the ground wire to the gas or the water piping as plastic pipe or dielectric unions may isolate the Water Heater electrically.
- The wiring diagrams contained in this manual are for reference purposes only.
- Refer to this diagram and the wiring diagram of any controls used with the Water Heater. Read, understand and follow all wiring instructions supplied with the controls.
- Do not disconnect the power supply when the unit is in normal operation.
- Damage caused by freezing is not covered under the warranty.
- Manual(Rocker) switch maximum allowable current for each circulator is 16 amps at 125VAC. (Housing : Nylon #66 UL 94V-2 , Rocker : Nylon #66 UL 94V-2, Terminal : Copper Alloy)

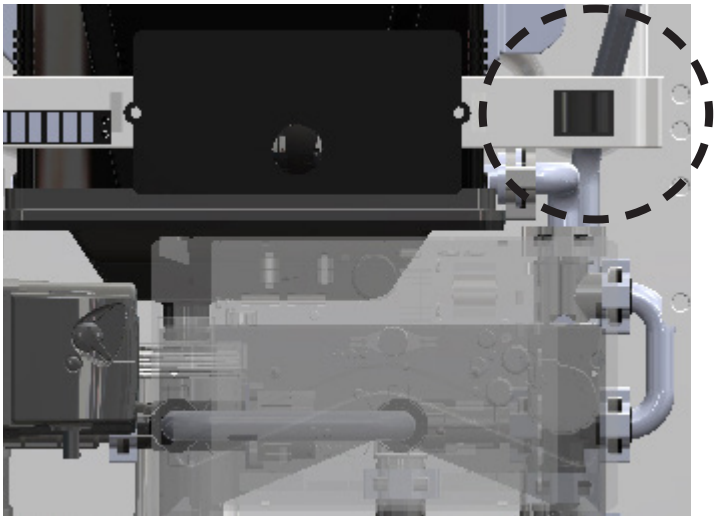

4.21 DIP Switches

- There is one set of DIP switches.
- DIP switches 6 and 7 must be set to OFF when operating the water heater normally.

Dip #	Function	OFF	ON
1-2	Machine power	Do NOT Move.	
3	Commercial Mode	OFF	ON*
4	Inlet DHW Flow Limiter over-ride	OFF	ON
5	Propane or Natural Gas	LP	NG
6	Max.	Normal	MAX Fire**
7	Min.	Normal	MIN Fire**

Table 15. Dip Switches

DIP Switch Factory Default:

1 : ON
2 : ON
3 : OFF (Commercial Mode *)
4 : OFF DHW Flow Limiter Over-Ride
5 : ON Nat Gas
6 : OFF Max Fire **
7 : OFF MIN Fire **

DIP Switch Default Position shown for Natural Gas

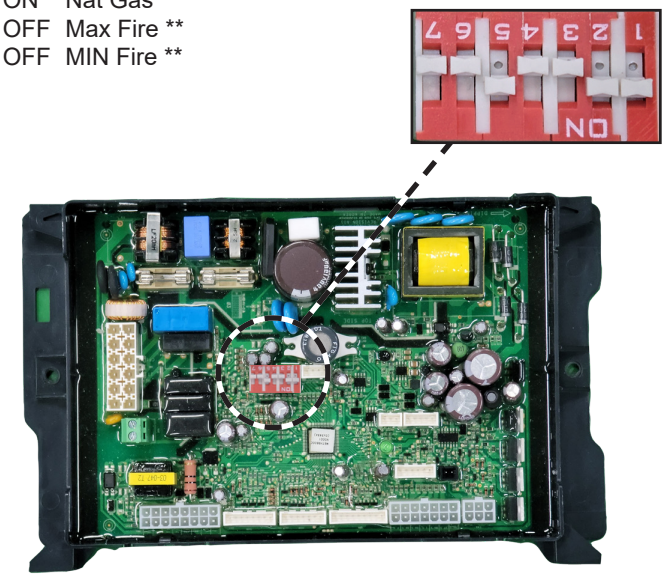

⚠ CAUTION

Scalding Risk: The maximum hot water supply temperature at Point-of-Distribution and/or Point-of-Use, anti-scald device/ thermostatic mixing valve at plumbing fixture or integral to the bathroom fixtures are dictated by the Plumbing Code and Health & Safety Code.
Consult with Local Codes requirements regarding Hot Water Supply temperature at the Point-of-Distribution, Point-of-Use, and requirements for Anti-Scald Devices, Thermostatic and Pressure-Balanced water supply fixtures.

⚠ WARNING

* DIP-3 Commercial Mode ON will allow DHW Setpoint Adjustment up to 185°F (85°C). Scalding Risk ! Consult with the Plumbing Code and Health & Safety Code for Point-of-Use, fixture Maximum Temperature limitation and requirements.

Flue temperatures will exceed maximum rating for PVC 149°F/65°C. CPVC, Polypropylene, or Stainless UL-1738/ ULC-S636 Venting must be used,

Section 5.6 Parameter Index Vt (Vent type) : PVC(Default) to high Temp CPVC/PolyP/ Stainless.

** DIP 6 & 7 is OFF in normal operation. Refer to Section 4.12 Gas Setup and Adjustment.

Maximum flame detecting voltage	2.4V
Pre-purge time (Tp)	Maximum 10s, minimum 1s
Safety Time (igniting time) (Ts)	3.5s
Igniting interval time	<10s
Post-purge time (Tip)	60s
Over-heating 1,2,3 protection detection time	<1s
Temperature sensor fault detection time	<2s
Number of trial for ignition (Ntl)	10
DHW water SET temperature range	95°F ~ 185°F (185°F with High Temp Venting installed)
DHW water ON minimum water flow	0.5 GPM
DHW water OFF minimum water flow	0.5 GPM

Table 16. System Control Settings

4.22 Wiring Diagram

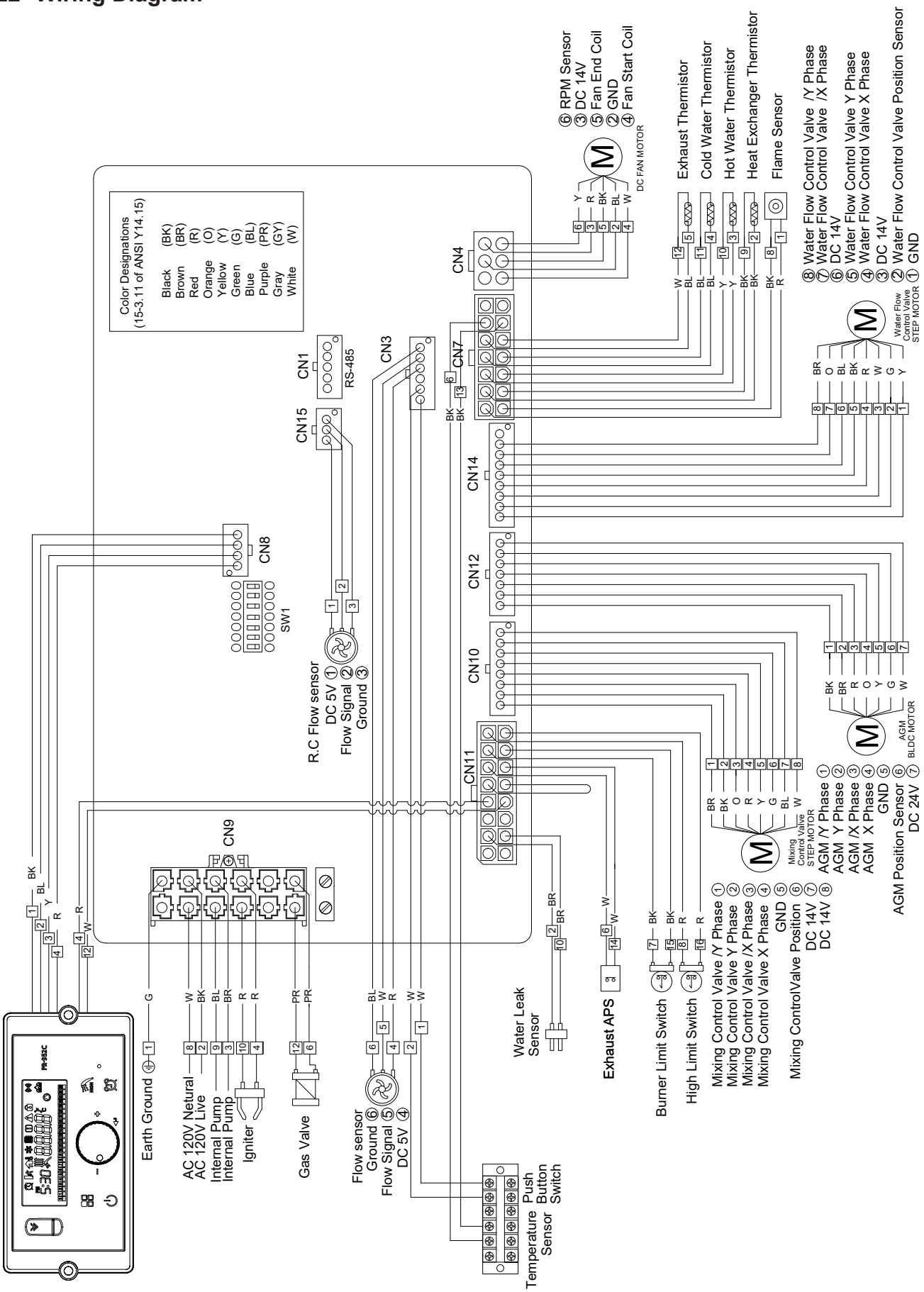

4.23 Ladder Diagram

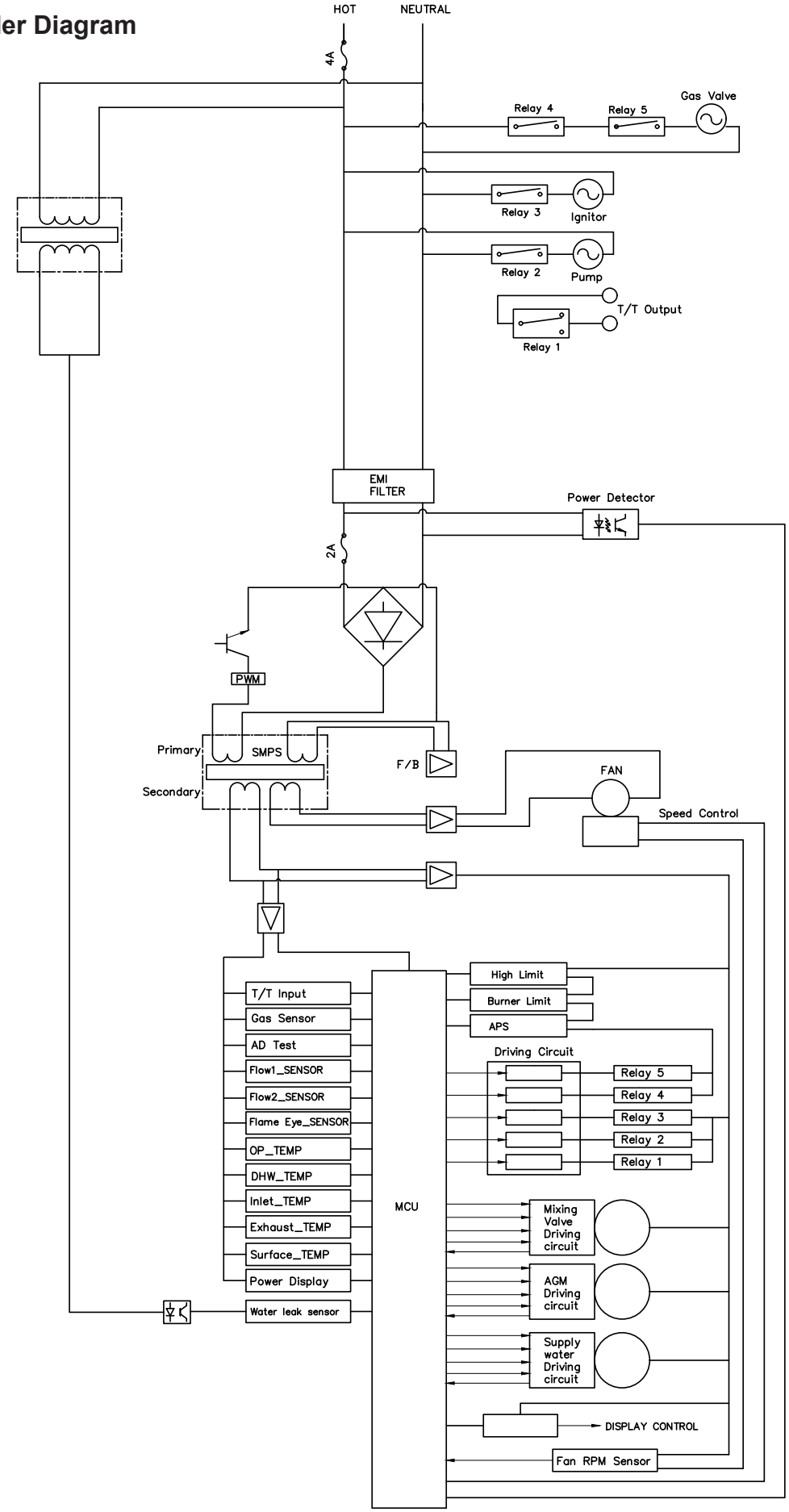

4.24 Electrical Connections

Connector			Descriptions	HT SELV
no. of location and type	Pin nr.	Board Silk		
CN9	1		GROUND	-
	2	L	Power Supply Line	HT (120VAC)
	3	CP1	Internal Circulation Pump	
	4	IT	Ignition Transformer	
	5	HEAT/CP2	Ceramic Heaters	
	6	GV	Gas Valve	
	7		Unuse	
	8	N	Power Supply Neutral	
	9-12	⌣ N ⌣	AC Power COM Line	
CN1	1	RS-485	RS485 +	SELV (5VDC)
	2		RS485 -	
	3		Unuse	
	4		RS485 +	
	5		RS485 -	
CN4	1	FAN	Unuse	-
	2		GROUND	SELV (30VDC)
	3		VDD	SELV (14VDC)
	4		Fan power(start coil)	SELV (30VDC)
	5		Fan power(end coil)	
	6		Fan speed feedback signal	SELV (14VDC)
CN8	1	MCU ISP	GND	SELV (5VDC)
	2		ISP /Reset port	
	3		ISP TOOL0 Data port	
	4		VCC	
CN11	1	HWL	Unused	-
	8			
	2	LWL	Water Leak Sensor	SELV (12VDC)
	10			
	3	HD	Unused	
	11			
	4	TH	Connect to the Display Control (Thermostat)	SELV (14VDC)
	12			
	5	APS	Exhaust Air Pressure Switch	
	13			
	6	EL	Unused	
	14			
	7	BL	Burner High Limit	
	15			
	8	HL	Water Temperature High Limit	
	16			

Connector			Description	HT SELV
no. of location and type	Pin nr.	Board Silk		
CN7	1,8	F.S	Flame Sensor	SELV (5VDC)
	2,9	OP.S	Outlet Operating Water Temperature Sensor	
	3,10	DH.S	DHW Temperature Sensor	
	4,11	I.S	Inlet Water Temperature Sensor	
	5,12	BG.S	Exhaust Water Temperature Sensor	
	6,13	ST.S	Surface Temperature Sensor	
	7,14	SP.S	Unused	
CN12	1	AGM	AGM Stepper Motor Coil / Y Phase	SELV (24VDC)
	2			
	3		AGM Stepper Motor Coil / Y Phase	
	4			
	5		GND	
	6		AGM Stepper Motor Position	
	7		VDD	
CN10	1	DHM (Mixing Valve)	DHM Stepper motor coil /Y phase	SELV (14VDC)
	2			
	3		DHM Stepper motor coil /X phase	
	4			
	5		GND	
	6		DHM Stepper motor position	
	7		VDD	
	8		VDD	
CN14	1	IWM (Flow Control Valve)	GND	SELV (14VDC)
	2		IWM Stepper motor position	
	3		VDD	
	4		IWM Stepper motor coil /X phase	
	5		IWM Stepper motor coil Y phase	
	6		VDD	
	7		IWM Stepper motor coil /X phase	
	8		IWM Stepper motor coil Y phase	
	9		Unused	
CN3	1	Push Button Switch	VCC	SELV (5VDC)
	2		Title 24	
	3		GND	
	4	FLUX1	VCC	
	5		Water Flow Sensor	
	6		GND	
CN5	1	RPM	Fan RPM Sensor	SELV (5VDC)
	2		GND	
CN15	1	FLUX2	VCC	
	2		Recirculation Flow Sensor	
	3		GND	

SECTION 5 Display Panel and Operation

5.1 Control Dial and Buttons

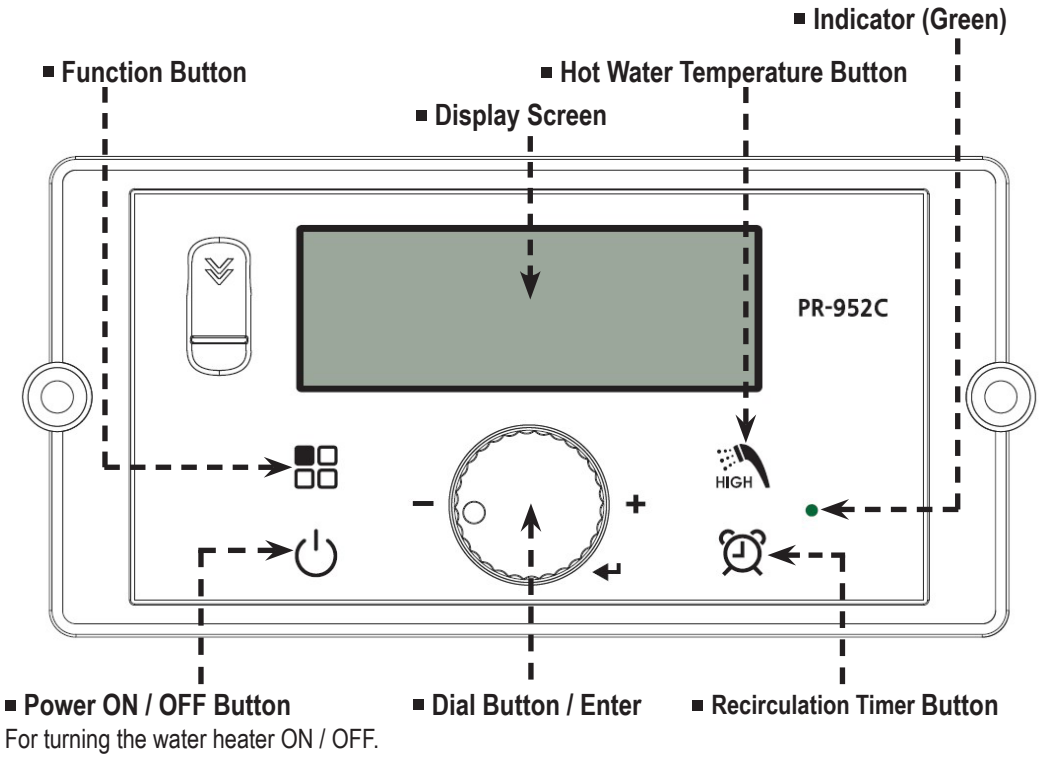

Buttons		Functionalities	
		PRESS (Tap)	PRESS and HOLD (5 seconds)
Power		Turns Display Panel ON / OFF	N/A
Modes		Tap to return to menu	(If Display Power was On) Status Display Mode (If Display Power was Off) Installer Mode
Hot Water	HIGH	DHW Set-Point LOW Range 95 - 120°F (35 - 49°C)	DHW Set-Point HIGH Range Commercial (Dip SW 3 ON) : 140 - 185°F (60 - 85°C) Residential (Dip SW 3 OFF) : 125 - 140°F (51.5 - 60°C)
Timer		Recirculation Timer Setting	N/A
Scroll / Select	– +	Turn to scroll, tap to select (clockwise or counterclockwise)	N/A

5.2 LCD Overview

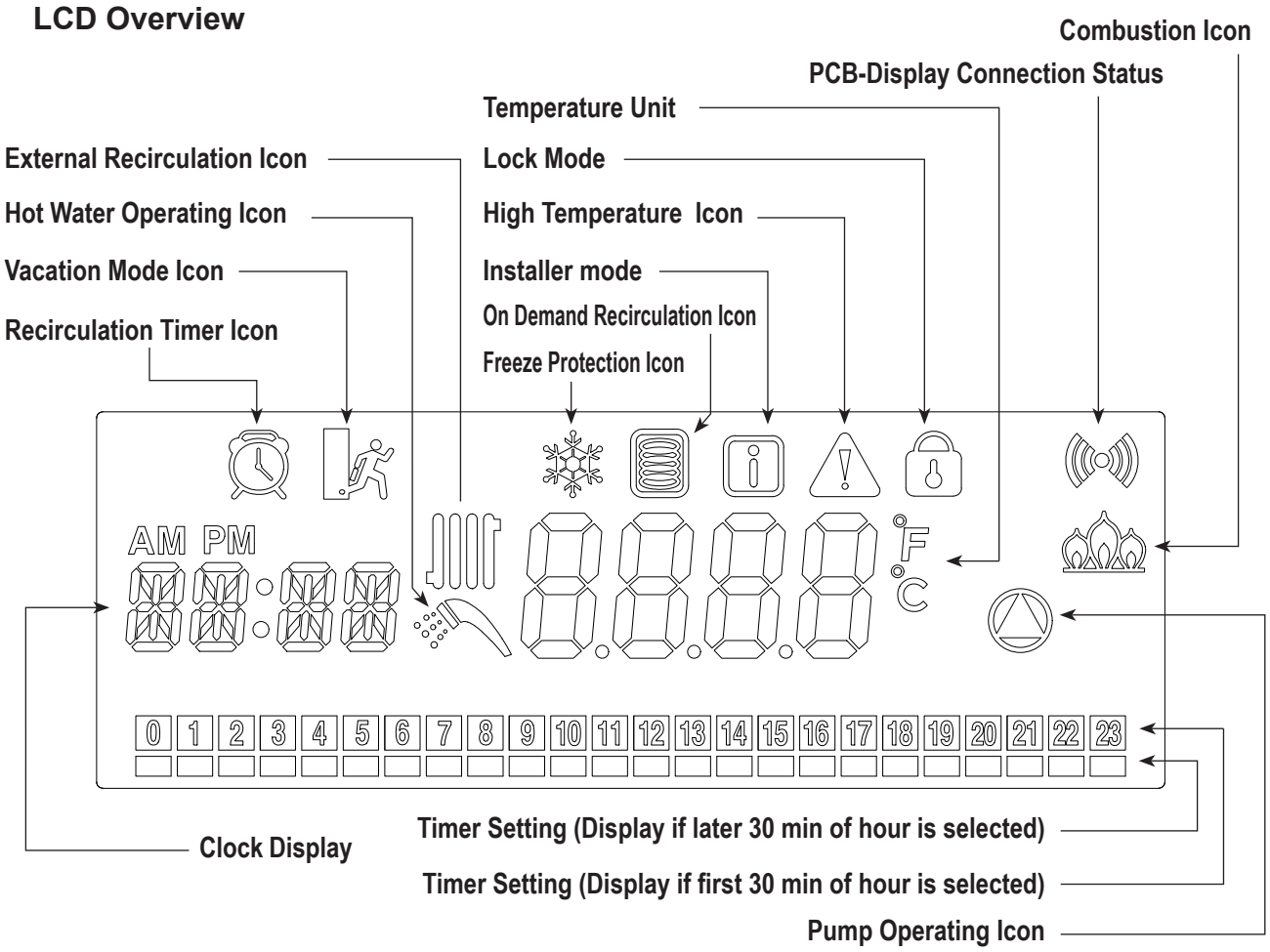

5.3 Operating Mode

■ Operating Mode

After the Power is turned on, and/or the Display Panel is turned on ⏻, the Display Panel will go through a 'Start Up' checklist and briefly show a sequence of diagnostic codes before entering into the 'Operating Mode. It will then display the following information.

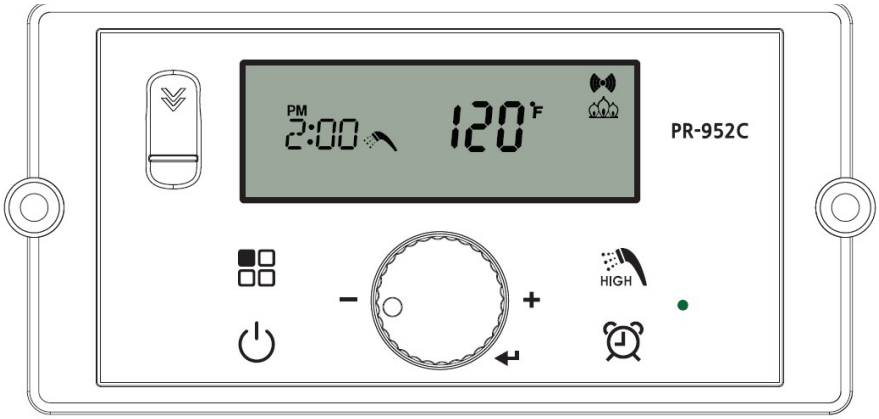

Indicate	Example
Target DHW Temperature	120
If the flow is present	
If flame detected	
Temperature sign Celsius or Fahrenheit letter	°F °C
Main PCB to Display Panel Connection State (If symbol is shown connection status is connected)	
Current Time	PM 2:00

5.4 Status Display Mode

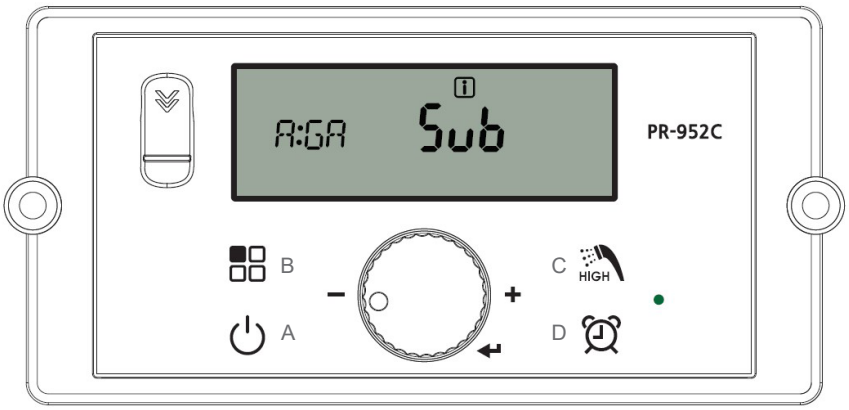

Index		Description
Main	**Sub**	
A:GA	**HotF**	DHW flow rate value by On demand
	rCLF	Circulated water flow rate value by Internal pump
b:Fr		Current Blower rpm
C:oP		Heat Exchanger temperature
D:dH		DHW Hot outlet temperature
E:Eh		Exhaust gas temperature
F:In		Cold Inlet temperature
G:rt	**PH**	Power Supply Time : 0000 hours
	rh	Burner Operating Time : 0000 hours
	It	Ignition attempts : 0000 cycles
	CF	Water accumulated : 0000 gallons
	PO	Pump ON time : 0000 hours
H:VP	**AG**	AGM Position (0 : Fully opened, 100 : Fully closed)
	FLCL	Incoming water control valve position(0 : Fully opened, 100 : Fully closed)
	bYPS	Mixing valve position(0 : Fully opened, 100 : Fully closed)
I:FC	**GAL(Default)**	Flow rate : gpm (Gallon / min), Temperature : F (Fahrenheit)
	LIt	Flow rate : lpm (Liter / min), Temperature : C (Celsius)
J:TA	**HOUR**	Hour setting : 0~23
	MIN	Minutes setting " 0~59
K:MD		Model Identification (199 : 199,000 BTU)
L:GT		Gas Type (ng, LP)
M:VA	**oFF**	Disable to Vacation Mode
	AUTO	Enable to Vacation Mode
	on	Enable to Vacation Mode (Immediate Activation)
N:Pr	**Pcb**	Control board revision number
	PnL	Display Panel revision number

To view any of the above listed Status Parameters,

Press and Hold Button ■□/□□ to get into the Status Display Mode.

Rotate Dial until you find the Parameter that you wish to view. Tap Dial to enter that Parameter.

Rotate the dial to view the parameter that you require and then press (tap) Dial to Exit.

5.5 DHW Set Point Change Mode

The GR Series has a built in water flow limiter and will automatically adjust the flow rate up or down based on outlet temperature at the inlet side of the water heater. If the temperature drops below the set point, and the water heater is at full fire, the inlet flow to the heat exchanger will be reduced. Therefore, the outlet temperature will begin to rise to the desired set point. If the temperature begins to rise above the set point the flow will increase until full flow is reached. This feature ensures that the outlet water is always the ideal temperature for the user.

If this feature is not desired, then the 'over-ride' to this feature must be turned ON, refer to section 4.21 DIP switches

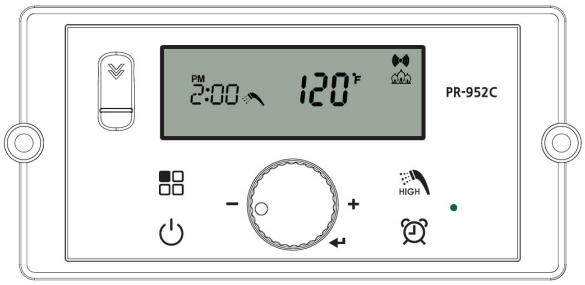

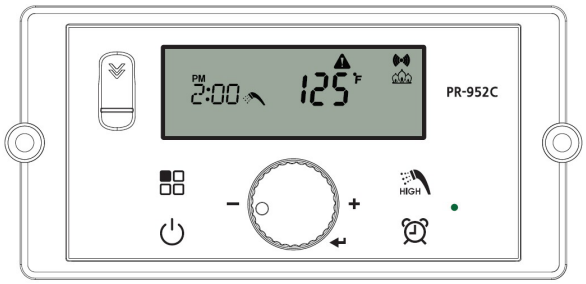

■ Set Point Change Modes

The display shows the following information when changing water heating temperature set points.

Indicate	Example
Target DHW Temperature	120
When changing set point, the DHW icon will flash	
When set-point range is high : Commercial (Dip SW 3 ON) : 140 - 185°F (60 - 85°C) Residential (Dip SW 3 OFF) : 125 - 140°F (51.5 - 60°C)	
Temperature sign Celsius or Fahrenheit letter	°F °C
Communication state indicate	
Current Time	PM 2:00

* Default set-point is 120°F (49°C)

To change between Celsius/Liters to Fahrenheit/Gallons refer to section 5.4 status display mode, and change I:FC from Gal to LIt.

• DHW 95 - 120°F (35 - 49°C) LOW range (Default)

- **To adjust the temperature to LOW range,** press the Button. The shower icon and current set point will flash (a flashing value means it can be changed).
- Turn dial clockwise to increase and counterclockwise to decrease until desired temperature is reached.
- Press dial to save set point changes.

• DHW 125 - 140°F (51.5 - 60°C) HIGH range(Residential)

CAUTION: Scalding Risk

- **To adjust the temperature to HIGH range(Residential),** press and **HOLD** the button for more than 5 seconds. The shower icon and current set point will flash (a flashing value means it can be changed).
- Turn dial clockwise to increase and counterclockwise to decrease until desired temperature is reached.
- Press dial to save set point changes and to Exit.

• DHW 140 - 185°F (60 - 85°C) HIGH range(Commercial - The commercial warranty term will apply)

CAUTION: Scalding Risk

- **To adjust the temperature to HIGH range(Commercial),** turn off the main power supply and move dip switch #3 to ON position, then turn power back ON. Then set 15:Vt in Installer mode to CPVC following the procedures on section 5.6 Installer Mode. Then press and hold the button for more than 5 seconds. The shower icon and current set point will flash(a flashing value means it can be changed).
- Turn dial clockwise to increase and counterclockwise to decrease until desired temperature is reached.
- Press dial to save set point changes and to Exit.

⚠ CAUTION

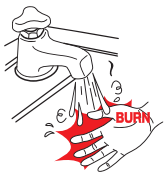

Scalding Risk: The use of an anti-scald mixing valve at the hot water outlet (water heater location) can reduce potential for scalding.The maximum hot water supply temperature at Point-of-Distribution and/or Point-of-Use, anti-scald device/thermostatic mixing valve at plumbing fixture or integral to the bathroom fixtures are dictated by the Plumbing Code and Health & Safety Code. Consult with Local Codes requirements.

5.6 Installer Mode

These changes are to be made only by a qualified technician.

To change any of the <u>Installer</u> Parameters, Start by turning **OFF** the Power ⏻ to the Display panel.

Then, with the power OFF, press and HOLD (5 seconds) the button ▣ to get into the installer mode.
Rotate dial E until you find the installer parameter that you wish to change.
Tap dial E to enter that parameter.
Adjust to the setting that you require and then press (tap) Dial E to save and to Exit.
Finish by pressing button ▣

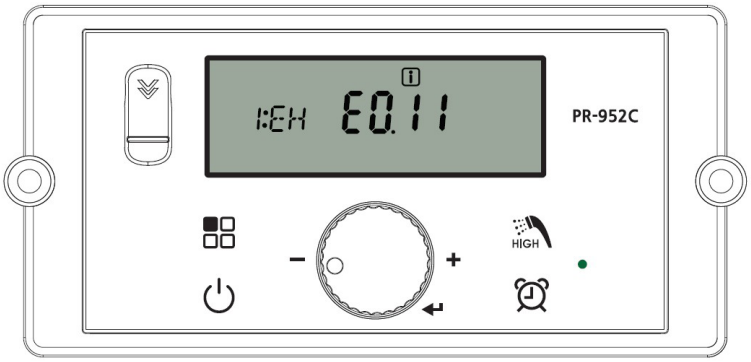

Index		Description
Main	**Sub**	
1:EH	E0:xx ~ E9:xx	E0:xx - Latest error, E9:xx - Oldest Error
2:cE	no(Default)	No clear Error history
	yES	Clear all error history
3:In	no(Default)	No reset
	yES	Reset Factory default except 4: AG, 5: FH and 6: FL
4:AG	Default : 0	Adjust AGM plate location for min only (-50 ~ +50)
5:FH	Default : 0	Adjust Blower pwm for High fire (-50 ~ +50)
6:FL	Default : 0	Adjust Blower pwm for Low fire (-50 ~ +50)
7:AH	Eco	Enable to Air Handler
	OFF (Default)	Deactivate Air Handler functions
	Anti	Anti-Bacterial Mode oFF - Standby Time / on - Operation Time
8:HA	0 - 2(Default)	0 ~ 2,000 ft (Sea Level)
	2 - 5	2,000 ~ 5,000 ft
	5 - 8	5,000 ~ 8,000 ft
	8 - 10	8,000 ~ 10,000 ft
9:RC	OFF(Default)	Deactivate Recirculation functions
	Itnl	Internal circulation mode
	Etnl	External circulation mode
	tt24	Title24 circulation mode
	CrOS	Crossover circulation mode
10:RT	HI-2	Recirculation temperature : High
	HI-1(Default)	Recirculation temperature : Medium
	Lo	Recirculation temperature : Low

Index		Description
Main	**Sub**	
11:IV	rIG (Default : 10)	Pump ON time set (1 ~ 60 minutes)
	POF (Default : 7)	Pump OFF time set (1 ~ 30 minutes)
12:HT	HI-2	Burner ON by Hot Outlet temp. : High
	HI-1(Default)	Burner ON by Hot Outlet temp. : Medium
	Lo	Burner ON by Hot Outlet temp. : Low
13:cn	Default :0	Cascade ID (0 : Not Cascaded, 1 : Leader, 2 : Follower)
14:Eh	OFF(Default)	Blowers in the cascade system operate independently (NRV installation required)
	on	Blowers operate simultaneously
15:Vt	PVC	PVC venting
	CPVC	CPVC / PP / SS venting
16:AL	oFF	Disabling Flushing Alarm
	365	Flushing alarm after 365 hours of hot water use
	700	Flushing alarm after 700 hours of hot water use
	1000	Flushing alarm after 1000 hours of hot water use
17:CK	A.PP1	Burner ON trial with Internal circulation
	b.PP2	Pump trial with External circulation
	c:FAn	Fan rotation trail (0 : stop, 100 : Max rpm)
	d.AG	AGM Initialization
	E.FL	Flow Control Valve Initialization
	F.bY	Mixing valve Initialization

5.7 Error Mode

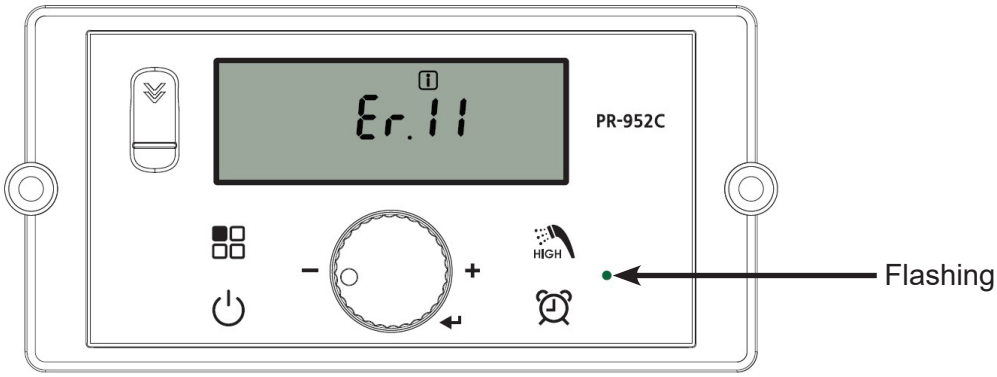

Indicate	Example
Error ‘Er . xx’ will flash	Er.11
Installer icon	i

NOTE: When communication between the Display Panel and the control board is lost, the i will not be displayed.

SECTION 6 Error Codes

6.1 Error Codes

Error Code	Error Code Description	Possible Remedies	*Lockout Type
10	Flame has been lost 8 (eight) times	Press the Power button to clear the Error Code. If Error happens again: 1. Monitor the gas pressure to the water heater while in operation. Ensure pressure is between 3.5 and 14"WC. 2. Check gas valve wire. Ensure connection is secure. 3. Check flame detection sensor. Ensure connections are secure. Normal operating Settings are more than 2.5VDC before ignition, less than 2.5VDC after ignition. 4. Check ignition transformer for proper connection. 5. Ensure that the flame is stable when lit. 6. Clean the spark igniter with steel wool to remove oxides. Ensure proper separation 0.12" -0.16" (3 - 4 mm). 7. Replace the spark igniter if damaged.	Hard Lock
11	Ignition has Failed 10 (Ten) Times	Press the Power button to clear the Error Code. If Error happens again: 1. Monitor the gas pressure to the water heater while in operation. Ensure gas pressure is between 3.5" WC and 10.5" WC for NG and between 8" WC and 14" WC for LP. 2. Check gas valve wire. Ensure connection is secure. 3. Check flame detection sensor. Ensure connections are secure. Normal operating settings are more than 2.5VDC before ignition, less than 2.5VDC after ignition. 4. Check ignition transformer for proper connection. 5. Assure that the flame is stable when lit. 6. Clean the spark igniter with steel wool to remove oxides. Ensure separation of 0.12" -0.16" (3-4 mm). 7. Replace the spark igniter if damaged.	Hard Lock
16	Operating Temperature Sensor or DHW Sensor detects Water Temperature Greater than 199°F (93°C)	This Error Code will clear when the heat exchanger water temperature decreases. If Error happens again: 1. Check if dip switch MAX Fire setting is ON. Switches 6 and 7 should be OFF for normal operation. 2. Check if DHW pipe is blocked. Ensure there is enough water flowing to the water heater. 3. Check DHW sensor at DHW outlet. If resistance is zero, replace the sensor. 4. Check Operating Temperature sensor at the heat exchanger. If resistance is zero, replace the sensor.	Hard Lock
20	High Limit Overheat Switch – Closed is Normal, Open is Fault	Press the Power button to clear the Error Code. 1. Inspect the High Limit Overheat switch. Ensure proper connections. 2. Check High Limit Overheat switch. With the switch at room temperature measure the continuity.	Hard Lock
29	Condensate Trap Blocked	Press the power button to clear the error code. 1. Check condensate line and termination for blockages. 2. Check exhaust vent for blockages.	Hard Lock
31	Inlet Water Sensor Open or Short	This Error Code will clear when inlet water temperature reads correctly. If Error happens again: 1. Check inlet water temperature sensor. Ensure connections are secure. 2. Check sensor resistance. If resistance is zero, replace the sensor.	Soft Lock
32	DHW Sensor Open or Short	This Error Code will clear when outlet water temperature reads correctly. If Error happens again: 1. Check DHW outlet temperature sensor. Ensure connections are secure. 2. Check sensor resistance. If resistance is zero, replace the sensor.	Soft Lock
33	Operating Temperature Sensor Open or Short	This Error Code will clear when outlet water temperature reads correctly. If Error happens again: 1. Check operating temperature sensor. Ensure connections are secure. 2. Check sensor resistance. If resistance is zero, replace the sensor.	Soft Lock
35	Exhaust Sensor Open or Short	This Error Code will clear when exhaust temperature decreases. If Error happens again: 1. Check exhaust temperature sensor. Ensure connections are secure. 2. Check sensor resistance. If resistance is zero, replace the sensor. 3. Check exhaust vent for blockage.	Soft Lock

***Lockout Type :** Hard lock: requires manual reset / Soft Lock: resets itself when issue subsides.

6.1 Error Codes (continued)

Error Code	Error Code Description	Possible Remedies	*Lockout Type
39	Flame Detected after Exiting a Flame On Condition	This Error Code will clear when the false flame condition is remedied. If Error happens again: 1. Check the water heater cover. Ensure it is secure. Flame detection sensor can detect an external light source. 2. Check flame detection sensor. Ensure connections are secure. Normal operating settings are more than 2.5VDC before ignition, less than 2.5VDC after ignition.	Soft Lock
40	Gas Leakage is Detected in 10 Minutes, or three times within One Hour (Greater than 5 Seconds Each Time)	IMPORTANT: If you smell gas, STOP! Follow the instructions on page 1, this manual, and call a qualified service technician or the fuel gas utility. Press the Power button to clear the Error Code. If Error happens again: 1. Check the water heater cover. Ensure it is secure. 2. Check gas connections for leakage with a soapy solution. Fix any leaks. 3. Check condition of the burner assembly.	Hard Lock
41	Fan Speed too High with Flame On	Press the Power button to clear the Error Code. If Error happens again: 1. Check the vent connections for blockages. 2. Check the burner assembly. 3. Check fan operation. If fan appears to be operating normally but RPMs are too low or too high, replace the fan.	Hard Lock
42	APS - Closed is Normal, Open is Fault	Press the Power button to clear the Error Code. 1. Check APS and control board connections. Ensure all are secure. 2. Check APS resistance. If resistance is zero, replace the air pressure switch. 3. Check APS hose. Ensure it is connected and in good condition. 4. Check exhaust vent for blockages.	Hard Lock
43	Burner Overheat Switch Open	Press the Power button to clear the Error Code. If Error happens again: 1. Check burner overheat switch connections. Ensure connections are secure. 2. Check the High Limit Overheat switch. With the switch at room temperature measure the continuity. 3. If the switch is not closed replace the switch.	Hard Lock
44	Possible pump failure	Press the Power button to clear the Error Code. 1. Check pump. 2. Check Recirculation Flow Sensor 3. If the problem persists, replace the pump.	Hard Lock
45	Water Leak Detection	If Error happens, the flow control valve closes automatically to prevent additional leakage. 1. The leak sensor is located in the bottom left of the cabinet. Clean water from this area. 2. Identify the source of the water. This can be condensation from cold surfaces in humid conditions, especially when the source of water cannot be identified. 3. If issue persists consider preventing back-draft through the vent system.	Hard Lock
46	Low recirculation flow	Press the Power button to clear the Error Code 1. Check return and cold water filters. 2. Verify recirculation loop length is within specification. 3. Check the pump operation. 4. Check recirculation setting. (External or On-Demand setting without dedicated return line. External or On-Demand setting with crossover valve) 5. If the problem persists, replace the pump.	Hard Lock

***Lockout Type :** Hard lock: requires manual reset / Soft Lock: resets itself when issue subsides.

6.1 Error Codes (continued)

Error Code	Error Code Description	Possible Remedies	*Lockout Type
60	Hot water temperature Abnormality	"Press the Power button to clear the Error Code 1. Check if dip switch MAX Fire setting is ON. Switches 6 and 7 should be OFF for normal operation. 2. Check if DHW pipe is blocked. Ensure there is enough water flowing to the water heater. 3. Check DHW sensor at DHW outlet. If resistance is zero, replace the sensor. 4. Check Operating Temperature sensor at the heat exchanger and DHW Outlet. If resistance is zero, replace the sensor. 5. Clean the cold water inlet filter and recirculation return filter. 6. Flush the heat exchanger.	Soft Lock
61	Fan Speed Feedback Signal Abnormal	This Error Code will clear when the condition is remedied. If Error happens again: 1. Check the connections to the fan. Ensure all are secure. 2. If the fan does not rotate during the ignition sequence, check for 120VAC power at the fan connection. If 120VAC power is present at the control, replace the blower. If the blower does not have 120VAC power, check power at the control. If 120VAC power is not present at the control, replace the control.	Soft Lock
65	Flow control valve Error	Press the Power button to clear the Error Code. If Error happens again: 1. Turn power OFF and ON at the main power switch inside the water heater. 2. Check wiring connections to flow control valve. Ensure all are secure. 3. Replace flow control valve.	Hard Lock
66	Mixing Valve Error	Press the Power button to clear the Error Code. If Error happens again: 1. Turn power OFF and ON at the main power switch inside the water heater. 2. Check wiring connections to mixing valve. Ensure all are secure. 3. Replace mixing valve.	Hard Lock
67	AGM Error	Press the Power button to clear the Error Code. If Error happens again: 1. Turn power OFF and ON at the main power switch inside the water heater. 2. Ensure fan inlet hole is completely open after turning the power OFF and ON. 3. Check wiring connections to the AGM. Ensure all are secure. 4. Check AGM operation. 5. Replace AGM components.	Hard Lock
72	Flame Signal Detected before Ignition	This Error Code will clear when the condition is remedied. If Error happens again: 1. Check the water heater cover. Ensure it is secure. Flame detection sensor can detect an external light source. 2. Check flame detection sensor. Ensure connections are secure. Normal operating settings are more than 2.5VDC before ignition, less than 2.5VDC after ignition.	Soft Lock
73	DIP Switch is abnormal	This Error Code will clear when the condition is remedied. If Error happens again: 1. Check dip switches. Ensure switches match the ratings plate requirements of the water heater. See dip switch details, this manual, for default settings.	Soft Lock

***Lockout Type :** Hard lock: requires manual reset / Soft Lock: resets itself when issue subsides.

6.1 Error Codes (continued)

Error Code	Error Code Description	Possible Remedies	*Lockout Type
76	Poor Communication	This Error Code will clear when the condition is remedied. If Error happens again: 1. Check connections from main control to display panel. 2. If the problem persists, replace the display.	Soft Lock
78	Cascade Communication Error	NOTE: This error will only appear in a cascaded system. 1. Turn power OFF and ON at the appliance display panel. 2. If error reappears, ensure all cascaded appliances are powered ON. 3. If error reappears, check Installer Mode parameter 13:cn at all cascaded appliances. Ensure the address number matches that of the connected appliance (01 for Leader, 02 for Follower 1, etc.) and that no numbers are skipped or repeated. 4. Ensure every water heater in the cascade system is connected properly. Inspect the cascade cables and ensure all are connected without damage or defect. Repair or replace any damaged cables.	Soft Lock
94	Exhaust NTC detects Vent Temperature is Greater than 149°F (65°C) * Commercial Mode : 195°F(90°C)	This Error Code will go away when the condition is remedied. If Error happens again: 1. Check if dip switch MAX Fire setting is ON. Switches 6 and 7 should be OFF for normal operation. 2. Check exhaust temperature sensor. Ensure connections are secure. 3. Check sensor resistance. If resistance is zero, replace the sensor. 4. Check exhaust vent for blockage.	Hard Lock

***Lockout Type :** Hard lock: requires manual reset / Soft Lock: resets itself when issue subsides.

SECTION 7 Troubleshooting

7.1 Diagnostics

Before calling for service, review the following diagnostic steps first for saving time and money.

Symptom	Remedy
Burner does not ignite even if hot water is opened.	Make sure that the ON/OFF button on the Display Panel has been turned ON.
	If the monitor on the Display Panel is blank, make sure the power cord is plugged in and fuses on the control board in the units are good.
	Make sure that there is water supplied to the unit. The heater will be running when the inlet water flow sensor detects the flow over 0.5gpm.
	Make sure the cold and hot water valve are not plumbed in reverse.
	Make sure that cold water and gas supply lines are opened.
	Make sure that water lines are not frozen.
Outlet water is not hot enough.	Make sure that the set point temperature on the unit is not too low.
	Make sure that the filter in the cold water inlet line is not clogged with debris.
	Make sure that the gas supply type is correct.
	Check if the supply and manifold gas pressures are in accordance with specifications.
	Make sure that the water flow sensor with three wires has been properly connected on the flow control valve.
Outlet water is too hot.	Make sure that the set point temperature on the unit is not too hot.
	Make sure that the filter in the cold water inlet line is not clogged with debris.
	Make sure that the gas supply type is correct. (Check the provided gas with the water heater model)
Lukewarm water temperature	Make sure that the filter in the cold water inlet line is clean.
	Check if the supply gas pressure is sufficient.
The blower is still operating after the combustion stops.	This is normal because the blower operates post-purge for 180 seconds. If the fan keeps running, use a multimeter to measure the frequency of the Red and Blue wires connected to the fan (refer to Section 4.22, Wiring Diagram). Replace the fan if the frequency is below 50 Hz.
Abnormal sounds come from unit during operation.	A leak of combustion gas between sealed chamber and exhaust duct inside the unit. Immediately call a qualified service technician for evaluation.
	Improper venting termination, make sure that the venting termination complies with specification.
	Check if the supply gas pressure is sufficient. Insufficient gas pressure will cause unstable burner flame and noise.

7.1 Diagnostics (continued)

■ Diagnostics and suggested corrective actions

This controller is able to record information about the water heater's condition for the ten previous faults or errors. Refer to the 'Error Code' section of this Manual, (Section 6).

Display	Condition	Diagnostic	Corrective Action(s)
Nothing shown on display panel and blower running at full speed.	Panel is not receiving power.	Check wiring for short circuit or incorrect wiring.	Correct wiring per wiring diagram including connection of transformer to the control.
		Check for 14 VDC output of panel wire.	Push the 'Power' button of display panel.
Nothing is shown in display panel and no other water heater components are operating.	Control is not receiving 120VAC power.	Is there 120 VAC at the manual switch?	Correct the power supply from the manual switch.
		Check the water heater inside power manual switch.	Turn on the manual power switch inside the water heater case.
		Check for 120 VAC at the line voltage terminal inside the water heater case.	Correct wiring inside the water heater case using the wiring diagram in this manual.
Nothing is shown on display panel, but water heater is operating.	Occurs when the communication is lost from the control to the display.	Check for loose connections and proper pin alignment/ engagement on the Control's plug.	Check for continuity on the wire harness from the display to the display panel. See repair parts section for proper replacement part.
		Cycle power off and on using water heater power switch and check for operation.	Replace with new display module. See repair parts section for proper replacement part.
TEMPERATURE RISE TOO QUICKLY	Occurs when supply water temperature in heat exchanger rises faster than 2°F per second during the first two minutes the burner is on.	Automatically resets after a few minutes delay or use manual reset.	See the next section titled TEMPERATURE SENSOR and follow procedures for loose connections.
TEMPERATURE SENSOR	Occurs when a temperature sensor has electrically shorted(SHORT) or has become disconnected (OPEN).	Reset using manual. Reset screen on display panel. (Power button)	Check all the temperature readings of the water heater on the DIAGNOSTICS - TEMPERATURES menu to determine if any sensors are currently displayed as SHORT or OPEN.
			Check wire harness for loose connections and pin engagement at sensor Connection and Control module.
			If problem persists after checking items above, replace Control.

Display	Condition	Diagnostic	Corrective Action(s)
FLAME FAULT	Occurs when flame is detected when there should be no flame	Reset using manual switch. Reset screen on display panel. (Power button)	Burner may be operating too hot due to incorrect combustion.
			Check for flame at burner via flame current with burner off. Turn off and watch flame through observation port. If flame continues after shutdown, replace gas valve.
BLOWER FAULT	Blower is unable to reach required speed or 0 RPM when it is turned off.	Reset using manual switch. Reset screen on display panel. (Power button)	Check wire harness for loose connections and pin engagement at blower connections.
			Water heater is in standby mode and fan is not running. If FAN SPEED is not 0 RPM then replace the fan.
IGNITION FAULT	After the 8 times of ignition attempt, flame is not detected.	Manual switch Power off and on.	Check incoming gas pressure with water heater off and at MAX fire. Adjust within limits on rating plate.
			Check for vent pipe and intake pipe restrictions for blockage
			Check burner fasteners and gaskets
			Check air intake pipe and orifice
GAS VALVE FAULT	The Control has detected a problem with its gas valve output circuit	Reset using manual switch. Reset screen on display panel. (Power button)	Check wire harness connections between gas valve and Control.
			If lockout reoccurs, replace Gas valve.

SECTION 8 Maintenance

8.1 Annual Startup and General Maintenance

■ Regular Maintenance

After the water heater installation is completed, this manual should be placed in safe dry location near the water heater. Maintenance instructions should be carried out by these guidelines annually by a qualified technician.

For maintenance details, please refer to the instructions below.

Periodically	Please check installation location. Please check if water heater door is closed. Please check power source.
Monthly	Please check vent pipe. Please check air inlet pipe. Please check relief valve. Please check condensate outlet.
Every 6 Months	Please check water heater piping (gas and water) Please ckeck and operate relief valve
Extended vacation or seasonal home	Do not shut the water heater down unless fully drained of all water to prevent damage from freezing.

⚠ WARNING

DO NOT store combustible materials, gasoline or any other flammable vapors or liquids near the Water Heater. Remove them immediately or store them other places.

■ Maintenance procedures [Periodically]

- Check installation location

To prevent potential severe personal injury, death or substantial property damage, remove all material contaminants.
If contaminants are found :
Remove products immediately from the area.
In order to check the status of Water Heater, call a qualified service technician to inspect the Water Heater for possible damage from acid corrosion.

- Check if WATER HEATER door is closed.

Check if there is any problem with the Water Heater casing and the two upper and lower screws are tightened well. Water Heater casing must be closed while it is running.

- Check power source.

Make sure that the power cord is correctly connected. The main power line is connected to the manual switch box inside the Water Heater.

- Check vent pipe.

Visually inspect the flue gas vent piping for detecting any signs of blockage, leakage or deterioration of the piping. Please contact a qualified service technician immediately if you find any problem.

- Check air inlet pipe.

Visually inspect the air inlet to be sure it is unobstructed. Inspect entire length of air piping for ensuring that piping is intact and all joints are properly sealed. Call your qualified service technician if you notice any problems.

- Check relief valve.

Inspect the Water Heater relief valve and the relief valve discharge pipe for any signs of weeping or leakage. If the relief valve often weeps, immediately contact your qualified service technician for inspecting the Water Heater and system.

- Check the condensate outlet.

While the Water Heater is running, check the discharge end of the condensate drain tubing.
Make sure that no flue gas is escaping from the condensate drain tubing.
If flue gas is continuously escaping, it is a serious problem. Call your qualified service technician for inspecting the Water Heater and condensate line. Also, refill the condensate trap if problem persists regularly.

- Visually inspect the vent terminal rodent screen.

If clogged with debris, clean the screens or replace it with spare parts.

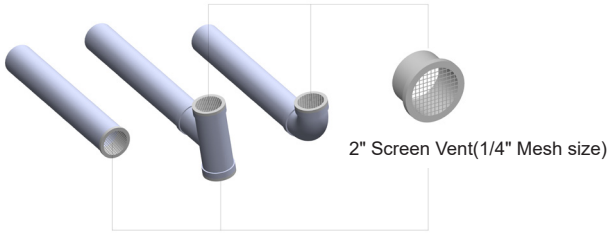

- Cleaning Air Intake Filter

- To properly maintain the water heater, you should clean the air intake filter every 3 months. If not, you may encounter combustion issues

To clean air intake filter:

1. Press Power button on the display panel to turn off the water heater.
2. Remove the screws holding the filter screen.
3. Remove the filter from the plastic assembly and clean it with a toothbrush and clean running water.
4. Dry the filter completely then reinsert the filter into the collar and secure with filter screws.

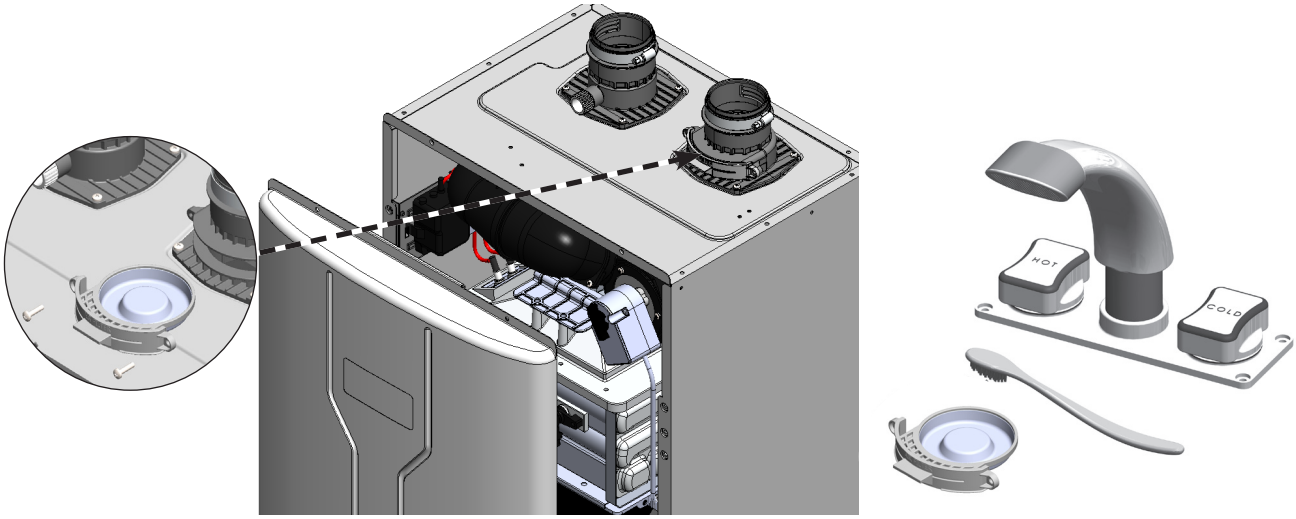

- Cleaning cold water Inlet Filter (Draining the Water Heater)

1. Place a bucket under the appliance to collect the residual water inside the water heater.
2. Press Power button on the display panel to turn off the electrical power to the water heater. And then turn off the gas valve.
3. Close water supply valve on the inlet to the appliance. If there is no valve, turn off main water valve.
4. Open the hot water faucets completely.
5. Remove the cold water inlet filter allowing the water in the pipes to drain into the bucket.. And then clean it with a toothbrush and clean running water.

6. To refill the water heater, follow the previous steps in reverse.

8.1 Annual Startup and General Maintenance (continued)

- Flushing the Water Heater

Flushing the Heat Exchanger of the water heater is a complicated procedure and should only be done by an authorized technician or licensed professional. Keep in mind that improper maintenance can void your warranty.

1. Disconnect electric power to the water heater.
2. Close the shutoff valves on both hot water outlet and cold water inlet lines. (V1 & V2)
3. Connect one hose "D1" to the valve "V3" and place the free end in the bucket. Connect one of the hoses "D3" to the circulation pump outlet and the cold water inlet line at the valve "V4". Connect other hose "D2" to the circulation pump inlet and place the free end in the bucket.

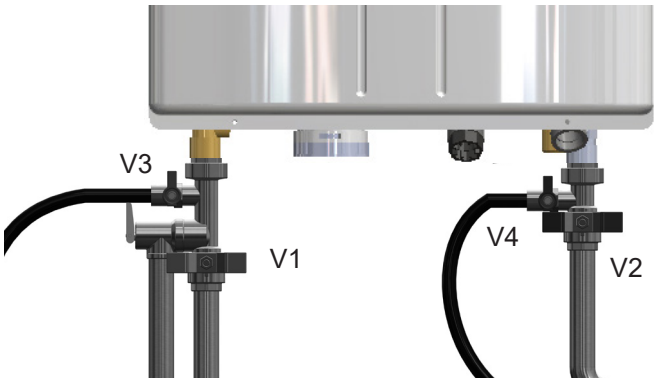

4. Pour the cleaning solution into the bucket. A straight white vinegar solution is recommended. If using a commercial descaling solution refer to the manufacture's proper dilution ratio.
   Place the drain hose (D1) and the hose (D2) to the pump inlet into the cleaning solution.
5. Open service valves (V3 & V4) on the hot water outlet and cold water inlet lines.
6. Turn on the circulation pump (Operate the pump and allow the cleaning solution to circulate through the water heater for at least 1 hour at a rate of 4 gallons per minute.)
7. Rinse the cleaning solution from the water heater as follows:
   - Remove the free end of the drain hose (D1) from the bucket.
   - Close service valve, (V4), and open shutoff valve, (V2). Do not open shutoff valve, (V1).
   - Allow water to flow through the water heater for 5 minutes.
   - Close shutoff valve (V2).

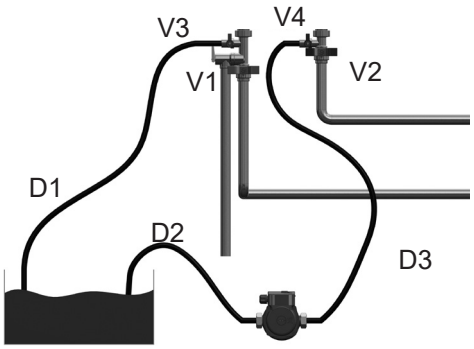

8. Disconnect all hoses.
9. Remove the cold water inlet filter from the water heater and clean out any residues.
10. Reinsert the filter and ensure the filter cap is securely tightened.
11. Connect electrical power to the water heater.

■ Maintenance procedures [Every 6 Months]

- Check piping. (gas and water)

Visually inspect for leaks around internal water piping. Also inspect external water piping, circulators, relief valve and fittings. Immediately call a qualified service technician to repair any leaks.
Leaks must be fixed by a qualified service technician immediately. Failure to comply with this instruction could result in severe personal injury, death or substantial property damage.

- Check relief valve operation

> **⚠ WARNING**
>
> Leaks must be fixed by a qualified service technician immediately. Failure to comply with this instruction could result in severe personal injury, death or substantial property damage. This discharge line must be installed by a qualified heating installer or a service technician.

> **⚠ WARNING**
>
> Before proceeding with maintenance, verify that the relief valve has be piped to a safe place, avoiding any possiblity of scalding from hot water.

Before proceeding with maintenance, verify that relief valve outlet has been piped to a safe place of discharge, avoiding any possibility of scalding from hot water.

If water flows freely, release the lever and allow the valve to seat. Watch the end of the relief valve discharge pipe to ensure that the valve does not weep after the line has had time to drain. If the valve weeps, lift the seat again to attempt to clean the valve seat. If the valve continues to weep, contact your qualified service technician for inspecting the valve and system. If water does not flow from the valve even though you have lifted the lever completely, the valve or discharge line may be blocked. Shut down the Water Heater immediately. Call your qualified service technician to inspect the water heater and system.

- Check burner condition

The burner should be cleaned or replaced by a qualified service technician when needed.

SECTION 9 Installation Check

9.1 Quick View

■ Before Installing
- Make sure that there is enough space for installing water and gas line.
- Verify vent/air termination is located as required.
- Verify the unit is set up for the gas supply.

■ Install Water Piping
- Water Heater loop piping must be sized to the minimums listed in the Water Heater manual. Using smaller piping will cause performance problems.

■ Install Vent & Air Piping
- Slide the air inlet pipe and vent pipe into the Water Heater pipe connector.
- Make sure the terminations are placed as required in the manual and that air intakes are at least 12 inches above normal snow line.
- Refer to the material check list in this guide for a list of items needed.

■ Install Condensate Piping / Tubing & Components
- Fill out the material check list in this guide to ensure you have the tubing or PVC pipe and all components needed for the condensate piping.
- Connect internal components that are supplied with the Water Heater.

■ Install Gas Piping
- Install a union and shutoff valve.

■ Wire the Water Heater
- Connect power wiring and control wiring per water heater manual wiring diagram.(Section 4.21)

■ Start up, Adjust & Test
- Follow the Water Heater manual instructions to clean the system if needed, then fill and check water chemistry.

9.2 Final check lists

■ Final check: Installation Conditions.
- Is the Water Heater properly mounted on the wall?
- Is there space for a drain which is close to the Water Heater?
- Are there any combustible materials near the Water Heater and vent pipe?
- Is the air supply sufficient for proper operation of the Water Heater?
- Are the proper service clearances maintained?
- Is the distance between the Water Heater and point of vent termination minimized?
- Is the proper distance from windows, doors, and other intake vents maintained?

■ Final check: Gas pipe installation
- Is the gas supply line equipped with a manual shut off valve?
- Is the gas supply line a minimum of 1/2" inner diameter?
- Is the gas supply line length and diameter adequacy to deliver the required BTU's?
- Has the gas supply line pressure been measured?
- Does the supply gas type match the type indicated on the water heater rating plate?

■ Final check: Air/Vent pipe installation
- Has the Water Heater been vented with 3" or 2" PVC, CPVC, Polypropylene or BH Special Gas Vent (S636 PVC, CPVC) for Category IV appliances in accordance with this manual and/or your local code?
- Is the vent termination at least 12" above the normal snow line?
- Is the total vent length within the maximum vent length restriction?
- Have you checked the air/vent piping for leaks?
- Have you properly supported the vent termination?
- Are all vent runs properly supported?
- Is the vent sloped upward toward the vent termination at a rate of 1/4" per foot (2% grade)?

■ Final check: Condensate drain installation
- Have you installed a condensate drain line from the Water Heater to a drain or laundry tub?

■ Final check: Setting the DIP switches
- Are all DIP switches correctly set on the main board?

Final Check List (continued)

- Final check : Connecting the power supply
  - Check that the power is 120V AC.
  - Confirm the polarity of the electrical connection.

- Final check : Pressure relief valve
  - Have you installed an approved pressure relief valve on the water heater?
  - Is the pressure relief valve at least 3/4" in diameter?
  - Have you installed the pressure relief valve on the hot water outlet pipe near the Water Heater?

- Final check : Burner flames
  - The burner flame should be checked annually for a constant proper blue color.
  - If the flame does not appear normal, the burner may need to be cleaned.
  - If the burner needs to be cleaned, it must be performed by a qualified service technician.

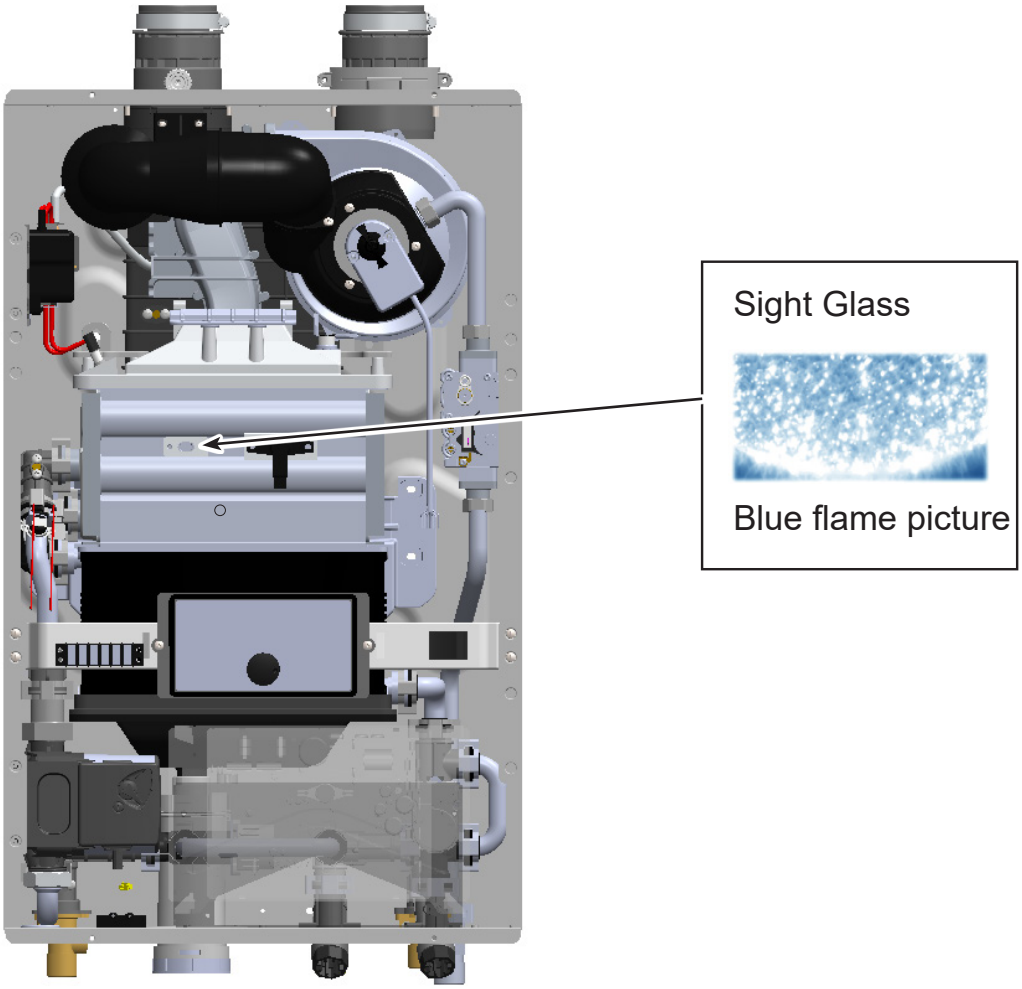

SECTION 10 GR Series Warranty

LIMITED INFINITI TANKLESS WATER HEATER WARRANTY

WHAT DOES THIS LIMITED WARRANTY COVER?

This limited warranty covers both the heat exchanger and component parts for leakage or other malfunction caused by defects in materials and/or workmanship. It applies to the original consumer purchaser and to any subsequent owner as long as the heater remains installed at its original place of installation.

WHAT DOES THIS LIMITED WARRANTY NOT COVER?**

1. This limited warranty does not cover leakage or other malfunctions caused by:
   a) Defective installation, specifically, any installation which is made:
      i) in violation of applicable state or local plumbing, housing or building codes, or
      ii) without a certified American Gas Association, ASME, or comparable pressure relief valve, or
      iii) contrary to the written instructions furnished with the unit.
   b) Adverse local conditions, specifically sediment or lime precipitate in the heat exchanger; corrosive elements in the atmosphere; or water quality contrary to the written requirements furnished with the unit.
   c) Misuse, specifically operations and/or maintenance contrary to the written instructions furnished with the unit, anode removal (if provided), disconnection, alteration or addition of non-approved components or apparatus, operation at settings other than those set forth on the rating plate, or accidental or other exterior damage.
2. This warranty also does not cover:
   a) Production of noise, taste, odors, discoloration or rusty water.
   b) Incidental property damage, loss of use, inconvenience or other incidental or consequential costs.
   c) Costs associated with the replacement and/or repair of the unit, including:
      i) any freight, shipping or delivery charges
      ii) any removal, installation or re-installation charges
      iii) any material, and/or permits required for installation, re-installation or repair
      iv) charges to return the defective heater and/or component part to the manufacturer.

WHAT IS THE PERIOD OF COVERAGE?

This limited warranty runs from date of installation (or without proof of installation, from three (3) months after the date of manufacture) for the period specified on the following table.

FIFTEEN YEAR LIMITED HEAT EXCHANGER WARRANTY*

A no charge* replacement will be provided in the event of a covered failure of the Heat Exchanger.

FIVE YEAR LIMITED PARTS WARRANTY*

All other parts not referenced above are covered for five years from date of original installation.

---

*Note: Limited heat exchanger warranty fifteen (15) years or 8,000 operational hours; whichever is shorter. Limited parts warranty is five (5) years or 8,000 operational hours; whichever is shorter. A warranty product or part is provided exclusive of labor, freight and/or any installation costs. Any product used for other than a single-family housing unit application will be warranted for only eight (8) years on heat exchanger and five (5) year on parts regardless of any other warranty period specified. All replacement heaters and parts carry the balance of the original warranty, i.e. if an original fifteen (15) year warranted heater develops a leak due to defects in materials/workmanship after only eight (8) years and 5,000 operational hours, the replacement unit is warranted for seven (7) years and 3,000 operational hours in this example.

WHAT IS THE DURATION OF THE IMPLIED WARRANTY?

ANY IMPLIED WARRANTIES, INCLUDING THE WARRANTY OF MERCHANTABILITY IMPOSED ON THE SALE OF THE WATER HEATER UNDER THE LAWS OF THE STATE OF SALE ARE LIMITED IN DURATION TO ONE YEAR FROM DATE OF ORIGINAL INSTALLATION.

HOW DOES STATE LAW RELATE TO THE WARRANTY?

Some states DO NOT allow:

1. Limitations on how long an implied warranty lasts.
2. Limitations on incidental or consequential damages.

Therefore, the above limitations or exclusions may not apply to you.

This warranty gives you specific legal rights, and you may also have other rights which vary from state to state.

****Restrictions are not applicable to implied warranties in California. See "Special State Provisions" on reverse side.**

LIMITED TANKLESS WATER HEATER WARRANTY (CONTINUED)

WHAT WILL WE DO TO CORRECT PROBLEMS?

1. If a defect occurs within the heat exchanger warranty period, we will:
   Provide a replacement heat exchanger of our manufacture (or at our option) repair any unit which develops a leak in the heat exchanger within the warranty period. To obtain a replacement, you must forward both the rating plate from the defective unit to us and a copy of the original sales receipt. If government regulations require the replacement heat exchanger to have features not found in the defective heat exchanger, you will be required to pay the difference in price represented by those government required features.

2. If a defect occurs within the parts warranty period, we will:
   Provide a replacement part (or at our option repair) any part which fails to function within the parts warranty period. To obtain a replacement, you must forward the defective part to us. If government regulations require the replacement part to have features not found in the defective part, you will be required to pay the difference in price represented by those government required features.

We do reserve the right to verify any claims of defect by inspection.

WHAT WILL WE NOT DO?

We will not:

1. Repair or replace any heater or part subject to conditions outlined in “What Does This Limited Warranty Not Cover?”
2. Reimburse any costs associated with repair and/or replacement.
3. Replace and/or repair any heater without complete model/serial number.
4. Replace any heater without prior receipt of actual rating plate from appliance and copy of original sales receipt.

HOW DO YOU GET WARRANTY ASSISTANCE?

Upon discovering a defect or problem, you should:

1. Contact either the Installer or dealer, or
2. Contact us--
   BRADFORD WHITE CORPORATION
   WARRANTY SUPPORT GROUP
   200LAFAYETTE ST.
   MIDDLEVILLE, MI 49333
   1-800-531-2111
   warranty@bradfordwhite.com

Please have model number and serial number ready.

WHAT SHOULD YOU DO TO KEEP THE WARRANTY IN EFFECT?

To facilitate warranty assistance, you should:

1. Follow all instructions enclosed with the product.
2. Retain all bills of sale or receipts for proof of installation, etc.
3. Contact your installer, dealer or our Warranty Department as soon as any problem or defect is noticed.
4. When necessary, allow us, or our chosen representative, to inspect the unit.
5. For your reference, fill in the Model and Serial Number found on the units Rating Plate:

Model Number

Serial Number

Date of Installation

Name of Installer

SPECIAL STATE PROVISIONS

For heaters installed in California or Oregon, paragraphs 2(c) (i) (iv) of the section “WHAT DOES THIS WARRANTY NOT COVER?” does NOT apply.
All other terms and conditions of this warranty apply as stated.

PLEASE RETAIN THIS WARRANTY IN A SAFE LOCATION FOR FUTURE REFERENCE

NOTES:

NOTES:

NOTES:

NOTES:

NOTES:

BRADFORD WHITE®
WATER HEATERS

United States

Sales	**800-523-2931**
Technical Support	**800-334-3393**
Email	***techsupport@bradfordwhite.com***
Warranty	**800-531-2111**
Email	***warranty@bradfordwhite.com***
Service Parts	**800-538-2020**
Email	***parts2@bradfordwhite.com***

Canada

Sales & Technical Support	**866-690-0961**	**905-203-0600**
Fax	**905-636-0666**	
Warranty	***bwccwarranty@bradfordwhite.com***	
Technical Support	***bwcctech@bradfordwhite.com***	
Orders	***ca.orders@bradfordwhite.com***	

For U.S. and Canada field service,
contact your professional installer or
local Bradford White sales representative.

International

General Contact	***international@bradfordwhite.com***

©2022, Bradford White Corporation, USA. All rights reserved.