# Installation and Operation Manual

## Gas-Fired Water Heater

A Spanish language version of these instructions is available by contacting the manufacturer listed on the rating plate.

La versión española de estas instrucciones se puede obtener al escribirle a la  fábrica cuyo nombre aparece in la placa de especificaciones.

## ⚠ WARNING

**If the information in these instructions is not followed exactly, a fire or explosion may result in property damage, personal injury or death.**

**For Your Safety**

Do not store or use gasoline or other flammable, combustible, or corrosive vapors and liquids in the vicinity of this or any other appliance.

**WHAT TO DO IF YOU SMELL GAS:**

- **DO NOT** try to light any appliance.
- **DO NOT** touch any electrical switch.
- **DO NOT** use any phone in your building.
- Immediately call your gas supplier from a neighbor's phone. Follow the gas supplier's instructions.
- If you cannot reach your gas supplier, call the fire department.

**Installation and service must be performed by a qualified installer, service agency, or the gas supplier**.

**For your family's comfort, safety and convenience, it is recommended this water heater be installed and serviced by a plumbing professional.**

**WARNING**
CANCER AND REPRODUCTIVE HARM
WWW.P65WARNINGS.CA.GOV

As required by the state of California Proposition 65.

# CONGRATULATIONS!

You have purchased one of the finest water heaters on the market today!

This installation, operation and instruction manual will explain in detail the installation and maintenance of your new water heater. We strongly recommend that you contact a plumbing professional for the installation of this water heater.

We require that you carefully read this manual, as well as the enclosed warranty, and refer to it when questions arise. If you have any specific questions concerning your warranty, please consult the plumbing professional from whom your water heater was purchased. For your records we recommend that you write the model, serial number and installation date of your water heater in the maintenance section in the back of this manual.

This manual should be kept with the water heater.


| | Page |
|---|---|
| General Information | 3 |
| Installation | 4 |
| Locating the Water Heater | 4 |
| Minimum Clearances | 6 |
| Venting | 7 |
| Combustion Air Supply | 8 |
| Water Connections | 9 |
| Gas Connections | 11 |
| General Operation | 13 |
| Lighting & Shutdown Instructions | 14 |
| Thermostat Adjustment | 17 |
| Burner Flame Check | 19 |
| Maintenance | 20 |
| Troubleshooting | 22 |
| Parts List & Drawing | 27 |
| Instructions for Installations Suitable for Water (Potable) Heating & Space Heating | 28 |


PFAS

# GENERAL INFORMATION

This gas-fired water heater is design certified by CSA International under the applicable American National Standard, Z21.10.1 or Z21.10.3-(as indicated on the rating plate), or CSA 4.1-(as indicated on the rating plate), available from CSA International, 8501 East Pleasant Valley Road, Cleveland, OH U.S.A. 44131-5575.

This water heater must be installed in accordance with local codes. In the absence of local codes, it must be installed in compliance with the National Fuel Gas Code (ANSI Z223.1-Latest Edition), or in Canada CAN/CGA B149.1 Natural Gas Installation Code (Latest Edition) or CAN/CGA B149.2 Propane Installation Code (Latest Edition). The warranty for this water heater is in effect only when the water heater is installed, adjusted, and operated in accordance with these Installation and Operating Instructions. The manufacturer will not be liable for any damage resulting from alteration and/or failure to comply with these instructions.

This water heater is not design certified for installation in a mobile home. Such an installation may create a hazardous condition and will nullify the warranty.

This water heater has been designed and certified for the purpose of heating potable water. The installation and use of this water heater for any purpose other than the heating of potable water may cause damage to the water heater, create a hazardous condition, and nullify the warranty.

**⚠ CAUTION**

Incorrect operation of this appliance may create a hazard to life and property and will nullify the warranty.

**⚠ WARNING**

Prior to connecting the gas supply line to a gas fired water heater, ensure that the gas supply line does not have moisture/water or dirt/scale inside the gas line. Commonly this check is done at the lowest point in the gas distribution system prior to gas burning appliances.

Do not use this appliance if any external part to the tank has been submerged in water. You should contact a qualified service technician to inspect the appliance and to replace any part of the control system including the combination gas control which has been submerged in water. See the Gas Connections section of this manual before servicing or replacing a water heater that has had any external part to the tank submerged in water.

**⚠ DANGER**

Do not store or use gasoline or other flammable, combustible, or corrosive vapors and liquids in the vicinity of this or any other appliance.

**IMPORTANT**

Before proceeding, please inspect the water heater and components for possible damage. **DO NOT** install any damaged components. If damage is evident then please contact the supplier where the water heater was purchased, or the manufacturer listed on the rating plate for replacement parts.

This water heater has been manufactured for operation at altitudes from sea level to 2000 ft *(610 m)*. For use of this appliance at an elevation greater than 2000 ft *(610 m),* contact the dealer or manufacturer listed on the rating plate for information on any necessary modification. Uncorrected operation of this appliance may create a hazard to life and property.

Make sure that you check the rating plate and combination gas control on the water heater to be certain that the type of gas being supplied corresponds with the marking on the rating plate and combination gas control.

A sacrificial anode(s) is used to extend tank life. Removal of any anode, except for inspection and/or replacement, will nullify the warranty. In areas where water is unusually active, an odor may occur at the hot water faucet due to a reaction between the sacrificial anode and impurities in the water.
If this should happen, an alternative anode(s) may be purchased from the supplier that installed this water heater. This will minimize the odor while protecting the tank. Additionally, the water heater should be flushed with appropriate dissolvers to eliminate any bacteria.

# INSTALLATION

**Locating the Water Heater**

**⚠ WARNING**

Water heaters are heat producing appliances. To avoid damage or injury there must be no materials stored against the water heater or vent-air intake system and proper care must be taken to avoid unnecessary contact (especially by children) with the water heater and vent-air intake components.
**UNDER NO CIRCUMSTANCES SHOULD FLAMMABLE MATERIALS, SUCH AS GASOLINE OR PAINT THINNER TO BE USED OR STORED IN THE VICINITY OF THIS WATER HEATER, VENT-AIR INTAKE SYSTEM OR IN ANY LOCATION FROM WHICH FUMES COULD REACH THE WATER HEATER OR VENT-AIR INTAKE SYSTEM.**

**This water heater MUST be installed indoors out of the wind and weather.**

This water heater **MUST NOT** be installed in any location where gasoline or flammable vapors are likely to be present, unless the installation is such to eliminate the probable ignition of gasoline or flammable vapors.

Water heaters in residential garages must be installed so that all burner(s) and burner ignition device(s) are located not less than 18 in *(45.7 cm)* above the floor and be located, or protected, to avoid physical damage. For other installations refer to local codes. In the absence of local codes, the water heater must be installed in compliance with the National Fuel Gas Code, (ANSI Z223.1- Latest Edition), or in Canada CAN/CGA B149.1 Natural Gas Installation Code (Latest Edition) or CAN/CGA B149.2 Propane Installation Code (Latest Edition).

The location of this water heater is of the utmost importance. Before installing this water heater, you should read the Installation section of these instructions. After reading these Installation and Operating Instructions, select a location for the water heater where the floor is level and is easily accessible to gas and water supply lines. DO NOT locate the water heater where water lines could be subjected to freezing temperatures. Make sure the cold-water pipes are not located directly above the gas control so that condensate during humid weather does not drip on the controls.
Note: Per Section 507.2 Seismic Provisions of the 2021 Uniform Plumbing Code (UPC). Water heaters shall be anchored or strapped to resist horizontal displacement due to earthquake motion. Strapping shall be at points within the upper one-third and lower one-third of its vertical dimensions. At the lower point, a distance of not less than 4 inches shall be maintained from the controls with the strapping. Please refer to the local authority having jurisdiction to see if there are any additional local requirements regarding seismic provisions.

## Installation (Locating the Water Heater) continued-

Water heater corrosion and component failure can be caused by the heating and breakdown of airborne chemical vapors. Examples of some typical compounds that are potentially corrosive are: spray can propellants, cleaning solvents, refrigerator and air conditioning refrigerants, swimming pool chemicals, calcium and sodium chloride, waxes and process chemicals. These materials are corrosive at very low concentration levels with little or no odor to reveal their presence. **NOTE:** DAMAGE TO THE WATER HEATER CAUSED BY EXPOSURE TO CORROSIVE VAPORS IS NOT COVERED BY THE WARRANTY. DO NOT OPERATE THE WATER HEATER IF EXPOSURE HAS OR WILL OCCUR. DO NOT STORE ANY POTENTIALLY CORROSIVE COMPOUNDS IN THE VICINITY OF THE WATER HEATER.

**⚠ WARNING**

Liquefied petroleum gases/propane gases are heavier than air and will remain at floor level if there is a leak. Basements, crawl spaces, closets and areas below ground level will serve as pockets for accumulation of leaking gas. Before lighting, smell all around the appliance area for gas. Be sure to smell next to the floor.

**IF YOU SMELL GAS:**

- Do not try to light any appliance.
- Do not touch any electric switch; do not use any telephone in your building.
- Immediately call your gas supplier from a neighbor's telephone. Follow the gas supplier's instructions.
- If you cannot reach your gas supplier, call the fire department.

**DO NOT OPERATE APPLIANCE UNTIL LEAKAGE IS CORRECTED!**

**⚠ WARNING**

**DO NOT ATTEMPT TO LIGHT ANY GAS APPLIANCE IF YOU ARE NOT CERTAIN OF THE FOLLOWING:**

- Liquefied petroleum gases/propane gas and natural gas have an odorant added by the gas supplier that aids in detection of the gas.
- Most people recognize this odor as a "sulfur" or "rotten egg" smell.
- Other conditions, such as "odorant fade" can cause the odorant to diminish in intensity, or "fade," and not be as readily detectable.
- If you have a diminished sense of smell or are in any way unsure of the presence of gas, immediately contact your gas supplier from a neighbor's telephone.

**Gas detectors are available. Contact your gas supplier or plumbing professional for more information.**

Proper venting practices must be considered when selecting a location for this water heater. For exact venting specifications, please consult the Venting section of these Installation and Operating Instructions.

This water heater must be located in an area where leakage of the tank, water line connections, or the combination temperature and pressure relief valve will not result in damage to the area adjacent to the water heater or to lower floors of the structure. When such locations cannot be avoided, a suitable drain pan must be installed under the water heater. The drain pan must have a minimum length and width of at least 4 in *(10.2 cm)* greater than the diameter of the water heater and must not restrict proper combustion air flow to the water heater. The drain pan, as described above, can be purchased from your plumbing professional. The drain pan must be piped to an adequate drain. The piping must be at least 3/4 in *(1.9 cm)* in diameter and pitched for proper drainage.

## Installation (Locating the Water Heater) continued-

It is recommended that a minimum clearance of 4 in *(10.2 cm)* be provided on the side of the water heater for servicing and maintenance of the combination temperature and pressure relief valve.

To comply with NSF requirements this water heater is to be:

a) Sealed to the floor with sealant, in a smooth and easily cleanable way, or

b) Installed with an optional leg kit that includes legs and/or extensions that provide a minimum clearance of 6” beneath the water heater.

# Minimum Clearances

**⚠ WARNING**

Failure to adhere to these installation and operating instructions may create a hazard to life and property and will nullify the warranty.

This installation must allow access to the front of the water heater and adequate clearance must be provided for servicing and operating this water heater. The water heater may be installed on either a combustible or non-combustible floor. If the water heater is to be installed directly on carpeting, it must be installed on top of a metal or wood panel (or equivalent) extending beyond the full width and depth of the appliance by at least 3 in *(7.6 cm)* in any direction or, if the appliance is to be installed in an alcove or closet, the entire floor must be covered by the panel, increase distances to provide clearance for servicing. If the rating plate or the label on the front of the water heater specifies minimum clearances less than those listed in the below table, the water heater may be installed in accordance with the minimum clearances listed on the rating plate or the label on the front of the water heater.

If it is necessary to install this water heater in an alcove, use the clearances listed in the following table and Figure 1.

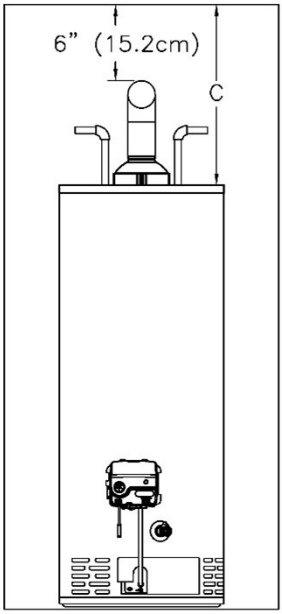


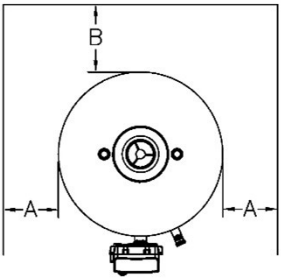


Minimum Clearances From Combustible Matierals For Alcove Installation

| | |
|---|---|
| A | 0" (0.0cm) |
| B | 0" (0.0cm) |
| C | 12" (30.5cm) |

**Fig. 1**

# Venting

**⚠ WARNING**

The venting system must be installed properly following all local codes or in the absence of local codes, the latest edition of the National Fuel Gas Code (ANSI Z223.1- latest edition), or in Canada, The Natural Gas and Propane Installation Code (B149.1-00 latest edition). Failure to properly install the venting system could result in property damage, personal injury, or death.

**⚠ WARNING**

Carefully inspect the venting system of a replacement water heater installation before connecting to the venting system. All joints in the vent connector must be securely fastened with screws and fit tightly together. Inspect the venting system for signs of deterioration (rust and perforation) and replace any sections that are not in good condition.
The chimney must be lined and in good condition. When an existing Category I appliance is removed or replaced, the original venting system may no longer be sized to properly vent the attached appliances.

Check to make sure the venting system is properly sized for the water heater. If the venting system was previously sized for another gas appliance that has been removed, the venting system may now be too large. Refer to the latest edition of the National Fuel Gas Code (ANSI Z223.1-latest edition), or in Canada, the Natural Gas and Propane Installation Code (B149.1-00 latest edition) for the correct sizing of venting systems and common venting with another gas appliance.

**DO NOT** vent this water heater into the venting system of another gas appliance designed to vent under positive pressure.

The water heater should be installed as close as practical to the venting system to minimize the vent connector length required. Refer to local codes for the distance limitations on vent connector lengths.

At the completion of the water heater installation, the burner and venting system must be checked for proper operation with all other commonly vented appliances in operation. Check for spillage of flue products around the outside relief opening of the draft hood after several minutes of operation. The flame from a match should be drawn into the draft hood. **DO NOT** use the water heater or connected equipment if spillage is detected until the problem is corrected.

Refer to the latest edition of the National Fuel Gas Code, or in Canada, the Natural Gas and Propane Installation Code for complete details on the “Procedure to Be Followed to Place Equipment in Operation”.

**IMPORTANT**

Use of cellular core PVC (ASTM F891). Cellular core CPVC, or Radel® (polyphenylsulfone) in non-metallic venting systems is prohibited, and covering non-metallic venting with thermal insulation is prohibited.

This water heater has been shipped with a draft diverter for which it was designed with reference to the horizontal and vertical planes, its certified category I, per latest ANSI Z 21.10.3-2015.CSA 4.3-2015 revision. Refer to the latest edition of the National Fuel Gas Code (ANSI Z223.1-latest edition), or in Canada, the Natural Gas and Propane Installation Code (B149.1-00 latest edition). If removed, the draft diverter must be replaced in the same position and secured to the jacket top by which it was installed.

## Venting continued-

This water heater must be connected to a lined masonry chimney or venting system approved by local codes or ordinances. The vent connector used to attach the draft diverter outlet to the chimney or approved vent must be of the same diameter as the draft diverter outlet or larger. For proper venting in certain installations, a larger vent connector may be needed. Consult venting tables in ANSI standard (Z223.1-or latest edition), National Fuel Gas Code and CAN/CGA (B149.1 or B149.2-latest editions) Natural Gas and Propane Installation Code, or local code officials for proper application for your area.

In a horizontal application, it is important that condensate not be allowed to buildup in the exhaust vent pipe. To prevent this from happening the pipe should be installed with a slight upward slope so the condensate will run back toward the water heater. The vent system should be supported every 5 feet *(1.5 m)* of vertical run and every 3 feet *(1 m)* of horizontal run of vent pipe length. The venting system should have horizontal runs sloping upwards not less than ¼ inch *(21 mm/m)* from the appliance to the vent terminal.

# Combustion Air Supply

**⚠ WARNING**

Liquefied petroleum gases/propane gases are heavier than air and will remain at floor level if there is a leak. Basements, crawl spaces, closets and areas below ground level will serve as pockets for accumulation of leaking gas. Before lighting, smell all around the appliance area for gas. Be sure to smell next to the floor.

**IF YOU SMELL GAS:**

- Do not try to light any appliance.
- Do not touch any electric switch; do not use any telephone in your building.
- Immediately call your gas supplier from a neighbor's telephone. Follow the gas supplier's instructions.
- If you cannot reach your gas supplier, call the fire department.

**DO NOT OPERATE APPLIANCE UNTIL LEAKAGE IS CORRECTED!**

**IMPORTANT**

The flow of combustion and ventilating air must not be obstructed.

Provide adequate air for combustion and ventilation. An insufficient supply of air will cause recirculation of combustion products resulting in air contamination that may be hazardous to life. Such a condition often will result in a yellow, luminous burner flame, causing carboning or sooting of the combustion chamber, burners and flue tubes with possible damage to the water heater. When an exhaust fan is installed in the same room with a water heater, sufficient openings for air must be provided in the walls. Undersized openings will cause air to be drawn into the room through the chimney, causing recirculation of combustion products.

**Unconfined Spaces**

In unconfined spaces in buildings, infiltration may be adequate to provide air for combustion, ventilation, and dilution of flue gases. However, in buildings of tight construction (heavily insulated, weather stripping, caulked, vapor barrier, etc.), additional air may need to be provided using the methods described below.

## Venting continued-

**Confined Spaces**
Confined spaces are spaces defined as having less than 50 ft3/1,000 BTU/hr *(4.8 m3/kW)* of input.

**All Air from Inside the Building**
The confined space must be provided with two permanent openings communicating directly with an additional room(s) of sufficient volume, so that the combined volume of all spaces meets the criteria for an unconfined space. The total input of all gas utilization equipment installed in the combined space must be considered in making this determination. Each opening must have a minimum free area of 1 in2/1000 BTU/hr *(2200 mm2/kW)* of the total input rating of all gas utilization equipment in the confined space, but not less than 100 in2 *(0.06 m2)*. One opening must be within 12 in *(31 cm)* of the top and one within 12 in *(31 cm)* of the bottom of the enclosure.

**All Air from Outdoors**
Provide two permanent openings, one commencing within 12 in *(31 cm)* of the top and one commencing within 12 in *(31 cm)* from the bottom of the enclosure. The openings must communicate directly or by ducts with the outdoors or spaces (crawl or attic) that freely communicate with the outdoors.

1. When communicating with the outdoors through vertical ducts, each opening must have a minimum free area of 1 in2/4000 BTU/hr *(550 mm2/kW)* of total input rating of all equipment in the enclosure.
2. When communicating with the outdoors through horizontal ducts, each opening must have a minimum free area of 1 in2/2000 BTU/hr *(1100 mm2/kW)* of total input rating of all equipment in the enclosure.
3. When ducts are used, they must be of the same cross-sectional area as the free area of the openings to which they connect. The minimum dimension of rectangular air ducts cannot be less than 3 in *(8 cm)*.

Provide one permanent opening, commencing within 12 in *(31 cm)* of the top of the enclosure. The appliance must have clearance of at least 1 in *(3 cm)* from the sides and back and 6 in *(16 cm)* from the front of the appliance. The opening must communicate directly or by ducts with the outdoors or spaces (crawl or attic) that freely communicate with the outdoors and has a minimum free area of the following:

1. 1 in2/3000 BTU/hr *(700 mm2/kW)* of the total input rating of all appliances located in the enclosure.
2. Not less than the sum of the areas of all vent connectors in the space.

**Specially Engineered Installations**
The requirements noted under CONFINED SPACES above will not necessarily govern when special engineering, approved by the authority having jurisdiction, provides an adequate supply of air for combustion, ventilation, and dilution of flue gases.

# Water Connections

**NOTE:** *BEFORE PROCEEDING WITH THE INSTALLATION, CLOSE THE MAIN WATER SUPPLY VALVE.*

After shutting off the main water supply, open a faucet to relieve the water line pressure to prevent any water from leaking out of the pipes while making the water connections to the water heater. After the pressure has been relieved, close the faucet. The COLD water inlet and HOT water outlet are identified on the top of the water heater. The fittings at the cold water inlet and hot water outlet are dielectric waterway fittings with 3/4” NPT male thread. Make the proper plumbing connections between the water heater and the plumbing system to the house. Install a shut-off valve in the cold water supply line.

## Water Connections continued-

**⚠ CAUTION**

If sweat fittings are to be used, **DO NOT** apply heat to the nipples on top of the water heater. Sweat the tubing to the adapter before fitting the adapter to the water connections. It is imperative that heat is not applied to the nipples containing a plastic liner.

**⚠ WARNING**

**FAILURE TO INSTALL AND MAINTAIN A NEW, LISTED 3/4" X 3/4" TEMPERATURE AND PRESSURE RELIEF VALVE WILL RELEASE THE MANUFACTURER FROM ANY CLAIM, WHICH MIGHT RESULT FROM EXCESSIVE TEMPERATURE AND PRESSURES.**

If this water heater is installed in a closed water supply system, provisions must be made to control thermal expansion. **DO NOT** operate this water heater in a closed system without provisions for controlling thermal expansion. Your water supplier or local plumbing inspector should be contacted on how to control this situation.

After installation of the water lines, open the main water supply valve and fill the water heater. While the water heater is filling, open several hot water faucets to allow air to escape from the water system. When a steady stream of water flows through the faucets, close them and check all water connections for possible leaks.

**NEVER OPERATE THE WATER HEATER WITHOUT FIRST BEING CERTAIN IT IS FILLED WITH WATER.**

**⚠ WARNING**

For protection against excessive temperatures and pressure, install temperature and pressure protective equipment required by local codes, but not less than a combination temperature and pressure relief valve certified by a nationally recognized testing laboratory that maintains periodic inspection of production of listed equipment or materials as meeting the requirements of the Standard for Relief Valves and Automatic Gas Shutoff Devices for Hot Water Supply Systems, ANSI Z21.22 or the Temperature and Pressure and the Standard CSA 4.4, Temperature, Pressure, Temperature and Pressure Relief Valves and Vacuum Relief Valves. The combination temperature and pressure relief valve must be marked with a maximum set pressure not to exceed the maximum working pressure of the water heater. The combination temperature and pressure relief valve must also have an hourly rated temperature steam BTU discharge capacity not less than the hourly rating of the water heater.

Install the combination temperature and pressure relief valve into the opening provided and marked for this purpose on the water heater.

**Note:** Some models may already be equipped or supplied with a combination temperature and pressure relief valve. Verify that the combination temperature and pressure relief valve is in compliance with local codes. If the combination temperature and pressure relief valve does not comply with local codes, replace it with one that does. Follow the installation instructions above on this page.

Install a discharge line so that water discharged from the combination temperature and pressure relief valve will exit within 6 in *(15.2 cm)* above, or any distance below the structural floor and cannot contact any live electrical part. The discharge line is to be installed to allow for complete drainage of both the combination temperature and pressure relief valve and the discharge line. The discharge opening must not be subjected to blockage or freezing. **DO NOT** thread, plug or cap the discharge line. It is recommended that a minimum clearance of 4 in *(10.2 cm)* be provided on the side of the water heater for servicing and maintenance of the combination temperature and pressure relief valve.

**DO NOT** place a valve between the combination temperature and pressure relief valve and the tank.

## Water Connections continued-

### ⚠ WARNING

Hydrogen gas can be produced in an operating water heater that has not had water drawn from the tank for a long period of time (generally two weeks or more). H**YDROGEN GAS IS EXTREMELY FLAMMABLE.** To prevent the possibility of injury under these conditions, we recommend the hot water faucet to be open for several minutes at the kitchen sink before you use any electrical appliance, which is connected to the hot water system. If hydrogen is present, there will be an unusual sound such as air escaping through the pipes as hot water begins to flow. **DO NOT** smoke or have open flame near the faucet at the time it is open.

This water heater can deliver scalding temperature water at any faucet in the system. Be careful whenever using hot water to avoid scalding injury. Certain appliances such as dishwashers and automatic clothes washers may require increased temperature water. By setting the thermostat on this water heater to obtain the increased temperature water required by these appliances, the potential for scald injury increases. To protect against injury, you should install an ASSE approved mixing valve in the water system. This valve will reduce point of discharge temperature by mixing cold and hot water in branch supply lines. Such valves are available from the manufacturer of this water heater or a local plumbing supplier. Please consult with a plumbing professional.

### IMPORTANT

**If this water heater is installed in a closed water supply system, such as the one having a back-flow preventer, check valve, pressure reducing valve, or water meter with check valve in the cold-water supply, provisions shall be made to manage thermal expansion. DO NOT operate this water heater in a closed water supply system without proper provisions. A properly sized and properly installed thermal expansion tank and/or other device(s) must be installed. Work with your installation professional, your water supplier, or local plumbing inspector on how to properly manage this situation. Warranties do NOT cover damages from thermal expansion, such as pressure bulges and/or deformities.**

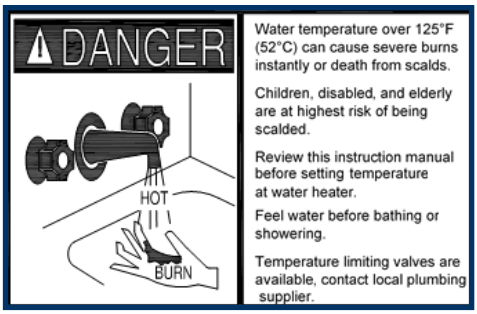


| Approximate Time/Temperature Relationships in Scalds | |
|---|---|
| 120°F *(49°C)* | More than 5 minutes |
| 125°F *(52°C)* | 1 1/2 to 2 minutes |
| 130°F *(54°C)* | About 30 seconds |
| 135°F *(57°C)* | About 10 seconds |
| 140°F *(60°C)* | Less than 5 seconds |
| 145°F *(63°C)* | Less than 3 seconds |
| 150°F *(66°C)* | About 1 1/2 seconds |
| 155°F *(68°C)* | About 1 second |

## Gas Connections

The gas supply lines must meet all requirements of the National Fuel Gas Code (ANSI Z223.1-Latest Edition), or in Canada CAN/CGA B149.1 Natural Gas Installation Code (Latest Edition) or CAN/CGA B149.2 Propane Installation Code (Latest Edition).

The minimum permissible gas supply pressure for the purpose of input adjustment is 1 in *(0.25 kPa)* water column above the operating manifold pressure. See the rating plate and gas valve for the manifold pressure and gas type. The maximum permissible gas supply pressure is 14 in *(3.5 kPa)* water column for natural gas and liquefied petroleum gases/propane gas.

1. Connect this water heater only to the type of gas (Natural or Propane) as shown on the rating plate. Use clean black iron pipe or equivalent material approved by local codes and ordinances (dirt and scale from the pipe can enter the gas valve and cause it to malfunction). The inlet gas line must have a minimum length of 3 in *(7.6 cm)* drip leg (sediment trap) installed as close to the water heater's gas valve as possible. A ground joint union must be installed as close to the water heater as possible in the gas supply line feeding the water heater to permit servicing of the water heater. Compounds used on the threaded joints of the gas piping must be resistant to the action of liquefied petroleum gases/propane gas.
   - **DO NOT** apply pipe dope to the gas valve inlet and make certain that no pipe dope has become lodged in the inlet screen of the gas valve. Extreme care must be taken to ensure no pipe dope enters the gas valve. Avoid excessive torque when tightening the gas supply line to the gas valve. Excessive torque may result in cracking of the gas valve housing and could create a gas leak. When tightening gas supply line to L.P. control, it is recommended to hold the inlet body of the control securely with an adequate wrench. The suggested max torque is 31.5 ft. lbs. *(4.4 kg-m).*

**⚠ WARNING**

**The manufacturer of this water heater will not be liable for any damage or injury caused as a result of a cracked gas inlet as a result of excessive torque.**

2. This water heater and its gas connection must be leak tested before placing the water heater in operation. Check for gas leaks with a soap and water solution and a brush or a commercial leak detector fluid. **NEVER USE A MATCH OR OPEN FLAME FOR TESTING!**

**⚠ CAUTION**

The water heater and individual shutoff valve must be disconnected from the gas supply piping system during any pressure testing of the system at test pressures in excess of 1/2 psi *(3.5 kPa).* The water heater must be isolated from the gas supply piping system by closing its manual shutoff valve during any pressure testing of the gas supply system at test pressures equal to or less than 1/2 psi *(3.5 kPa).* The supply line must be capped when not connected to the water heater.

3. While checking for leaks, care must be taken to prevent solution from contacting the electrical connections at the control. If electrical connections at the control become wet, they must be thoroughly dried before attempting to operate the water heater.

**⚠ WARNING**

The gas inlet pressure to the gas control must never exceed 14 inches of water column (1/2 psi). The gas supply system and any pressure regulating device in the gas line must be specified, inspected and adjusted to assure a gas supply pressure of 1/2 psi or less. Failure to do so may result in severe injury or death.

# GENERAL OPERATION

**⚠ WARNING**

Water heaters are heat producing appliances. To avoid damage or injury there must be no materials stored against the water heater or vent-air intake system, and proper care must be taken to avoid unnecessary contact (especially by children) with the water heater and vent-air intake system. **UNDER NO CIRCUMSTANCES SHOULD FLAMMABLE MATERIALS, SUCH AS GASOLINE OR PAINT THINNER TO BE USED OR STORED IN THE VICINITY OF THIS WATER HEATER, VENT-AIR INTAKE SYSTEM OR IN ANY LOCATION FROM WHICH FUMES COULD REACH THE WATER HEATER OR VENT-AIR INTAKE SYSTEM.**

**TO FILL THE WATER HEATER**

Close the water heater drain valve by turning the knob clockwise.

1. Open the cold-water supply shut-off valve.
2. Open several hot water faucets to allow air to escape from the system.
3. When a steady stream of water flows from the faucets, the water heater is filled. Close the faucets and check for water leaks at the water heater drain valve, combination temperature and pressure relief valve and the hot and cold-water connections.

**TO DRAIN THE WATER HEATER**

Should it become necessary to completely drain the water heater, make sure you follow the steps below:

1. For the White Rodgers mechanical control, rotate the thermostat dial clockwise to the lowest possible position, OR for the Resideo and the SIT electronic controls, rotate the thermostat dial counterclockwise to the lowest possible position.
2. For the White Rodgers mechanical control, partially depress and rotate the gas control knob clockwise to the “OFF” position.
3. Shut off the gas supply to the water heater.
4. Close the cold-water supply shut-off valve.
5. Open the drain valve on the water heater by turning the knob counterclockwise. The drain valve has threads on the end that will allow the connection of a standard hose coupling.
6. Open a hot water faucet to allow air to enter the system.

To refill the water heater, refer to “To Fill the Water Heater.”

**⚠ WARNING**

Wait at least (2) minutes after this control is pressurized with gas before attempting to light pilot and/or push igniter button. Failure to do so may result in severe injury.

# Lighting & Shutdown - Mechanical Gas Control (White Rodgers)

## FOR YOUR SAFETY READ BEFORE LIGHTING

WARNING: If you do not follow these instructions exactly, a fire or explosion may result causing property damage, personal injury or loss of life.

A. This appliance is equipped with an ignition device which automatically lights the pilot. Do not try to light the pilot by hand.

B. BEFORE OPERATING smell all around the appliance area for gas. Be sure to smell next to the floor because some gas is heavier than air and will settle to the floor.

WHAT TO DO IF YOU SMELL GAS

- Do not try to light any appliance.
- Do not touch any electrical switch; do not use any phone in your building.
- Immediately call your gas supplier from a neighbor's phone. Follow the gas supplier's instructions.
- If you cannot reach your gas supplier, call the fire department.

C. Use only your hand to slide the gas control switch. Never use tools. If the switch cannot be moved by hand, do not try to repair it, call a service technician. Force or attempted repair may result in a fire or explosion.

D. Do not use this appliance if any part has been under water. Immediately call a qualified service technician to inspect the appliance and to replace any part of the control system and any gas control which has been under water.

## OPERATING INSTRUCTIONS

1. STOP! Read the safety information above.
2. Turn off all electric power to the appliance.
3. Set the thermostat to lowest setting.
4. This appliance is equipped with an ignition device which automatically lights the pilot. Do not try to light the pilot by hand.

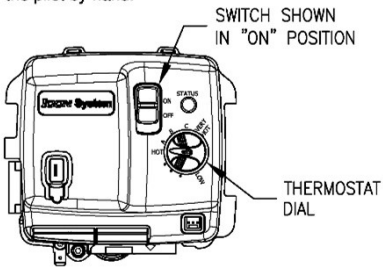


5. Slide the switch on the right side of the gas valve down to the "OFF" position
6. Wait five (5) minutes to clear out any gas. then smell for gas, including near the floor. If you the smell gas, STOP! Follow "B" in the safety information at left on this label. If you don't smell gas, go to the next step.
7. Slide the switch on the right side of the gas valve up to the "ON" position.
8. Set thermostat to desired setting.
9. Turn on all electric power to the appliance.
10. If the appliance will not operate, follow the instructions "To Turn Off Gas To Appliance" and call your service technician or gas supplier.

## TO TURN OFF GAS TO APPLIANCE

1. Turn off all electric power to the appliance if service is to be performed.
2. Set the thermostat to the lowest setting.
3. Slide the switch on the right side of the gas valve down to the "OFF" position.

# Lighting & Shutdown - ICON® System Electronic Gas Control (SIT)

## FOR YOUR SAFETY READ BEFORE LIGHTING

WARNING: If you do not follow these instructions exactly, a fire or explosion may result causing property damage, personal injury or loss of life.

A. This appliance has a pilot which is lit by a piezo-electric spark gas ignition system. Do not open the inner door and attempt to light the pilot by hand.

B. BEFORE LIGHTING smell all around the appliance area for gas. Be sure to smell next to the floor because some gas is heavier than air and will settle on the floor.

WHAT TO DO IF YOU SMELL GAS.
* Do not try to light any appliance.
* Do not touch any electric switch; do not use any phone in your building.
* Immediately call your gas supplier from a neighbor's phone. Follow the gas supplier's instructions.
* If you cannot reach your gas supplier, call the fire department.

C. Use only your hand to push in or turn the gas control knob. Never use tools. If the knob will not push in or turn by hand, don't try to repair it, call a qualified service technician. Force or attempted repair may result in a fire or explosion.

D. Do not use this appliance if any part has been under water. Immediately call a qualified service technican to inspect the appliance and to replace any part of the control system and any gas control which has been under water.

## LIGHTING INSTRUCTIONS

1. STOP! Read the safety information above on this label.
2. Set the gas control knob to the "OFF" position.

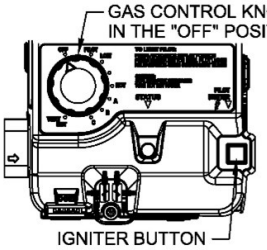


3. Wait five (5) minutes to clear out any gas. Then smell for gas, including near the floor. If you smell gas, STOP! Follow "B" in the safety information above this label. If you don't smell gas, go to the next step.
4. Remove outer door.
5. Locate igniter button.
6. Look through sight glass window on inner door to view pilot.
7. Turn the gas control knob clockwise to "PILOT" position.
8. Depress and hold in gas control knob. Immediately press igniter button until you hear a "click" sound, then release. Continue to hold down the gas control knob until the status light blinks. Release the gas control knob. It should pop back out. Check to see if the pilot is still lit. If the pilot goes out, repeat steps 2 through 8.
   - If gas control knob does not pop out when released, stop and immediately call your service technician or gas supplier.
   - If the pilot will not stay lit after several tries, turn the gas control knob to "OFF" and call your technician or gas supplier.
9. Replace outer door.
10. Turn gas control knob to desired setting.

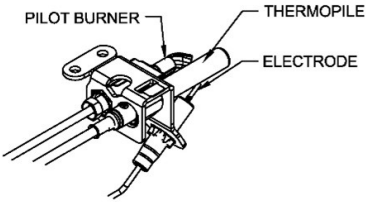


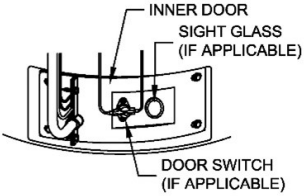


## TO TURN OFF GAS TO APPLIANCE

1. Turn the gas control knob counterclockwise to the "OFF" position.

# Lighting & Shutdown - ICON® System Electronic Gas Control (Resideo)

## FOR YOUR SAFETY READ BEFORE LIGHTING

WARNING: If you do not follow these instructions exactly, a fire or explosion may result causing property damage, personal injury or loss of life.

A. This appliance has a pilot which is lit by a piezo-electric spark gas ignition system. Do not open the inner door and attempt to light the pilot by hand.

B. BEFORE LIGHTING smell all around the appliance area for gas. Be sure to smell next to the floor because some gas is heavier than air and will settle on the floor.

WHAT TO DO IF YOU SMELL GAS.
* Do not try to light any appliance.
* Do not touch any electric switch; do not use any phone in your building.
* Immediately call your gas supplier from a neighbor's phone. Follow the gas supplier's instructions.
* If you cannot reach your gas supplier, call the fire department.

C. Use only your hand to push in or turn the gas control knob. Never use tools. If the knob will not push in or turn by hand, don't try to repair it, call a qualified service technician. Force or attempted repair may result in a fire or explosion.

D. Do not use this appliance if any part has been under water. Immediately call a qualified service technician to inspect the appliance and to replace any part of the control system and any gas control which has been under water.

## LIGHTING INSTRUCTIONS

1. STOP! Read the safety information above on this label.
2. Set the gas control knob to the "OFF" position.

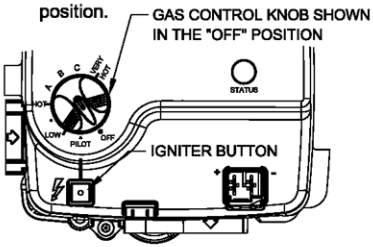


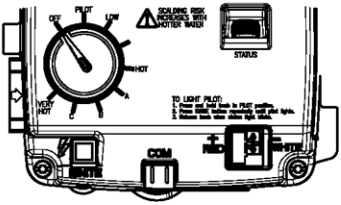


3. Wait five (5) minutes to clear out any gas. Then smell for gas, including near the floor. If you smell gas, STOP! Follow "B" in the safety information above this label. If you don't smell gas, go to the next step.
4. Remove outer door. Remove inner door or slide it open.
5. Locate igniter button.
6. Turn the gas control knob clockwise to "PILOT" position.
7. Depress and hold in gas control knob. Immediately press igniter button until you hear a "click" sound. Continue to hold down the gas control knob until the status light blinks. It can take up to 15 seconds for gas to begin flowing after the pilot is lit.
8. Release the gas control knob. It should pop back out. Check to see if the pilot is still lit. If the pilot goes out, repeat steps 2 through 7.
   - If gas control knob does not pop out when released, stop and immediately call your service technician or gas supplier.
   - If the pilot will not stay lit after several tries, turn the gas control knob to "OFF" and call your technician or gas supplier.
9. Replace inner door or slide it closed. Replace outer door.
10. Turn gas control knob to desired setting.

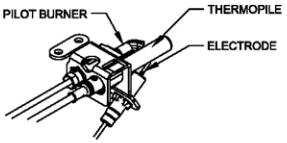


## TO TURN OFF GAS TO APPLIANCE

1. Turn the gas control knob counterclockwise to the "OFF" position.

# Thermostat Adjustment – Mechanical Gas Control (White Rodgers)

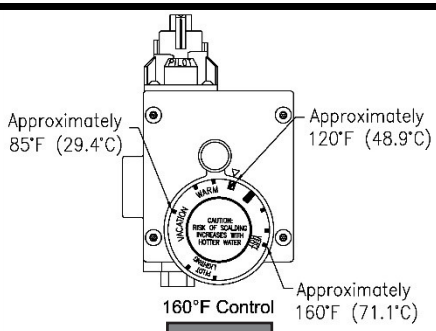


160°F Control

Fig. 2

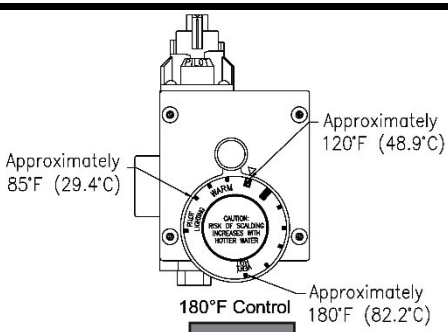


180°F Control

Fig. 3

The thermostat dial is set to its lowest temperature setting when shipped from the factory. **Remember that lower temperature settings are more energy efficient**. Adjust the temperature by turning the thermostat dial. It is suggested that the starting point setting not be greater than the "▲" or "Ø" mark on the thermostat dial (approximately 120°F [48.9°C]) as indicated above. Rotate the thermostat dial **clockwise** ↘ to decrease the temperature setting. Rotate the thermostat dial **counter-clockwise** ↙ to increase the temperature setting. Adjust the dial until the minimum acceptable temperature is achieved (See figure 2 and 3) above for approximate temperature settings).

# Thermostat Adjustment – ICON® System Electronic Gas Control (SIT)

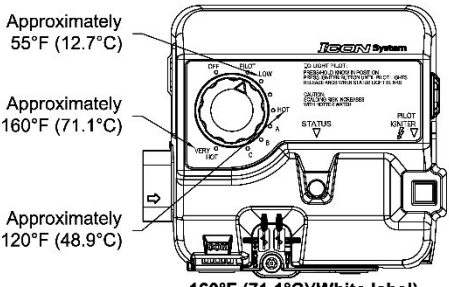


160°F (71.1°C)(White label)

Fig. 4

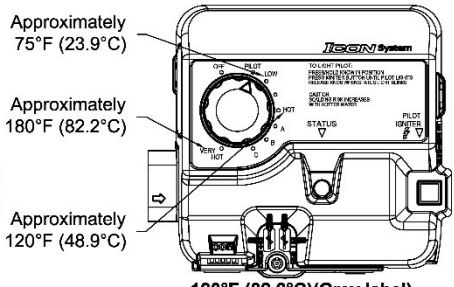


180°F (82.2°C)(Grey label)

Fig. 5

The thermostat dial is set to its lowest temperature setting when shipped from the factory. **Remember that lower temperature settings are more energy efficient**. Adjust the temperature by turning the thermostat dial. It is suggested that the starting point setting not be greater than the "HOT" mark on the thermostat dial (approximately 120°F [48.9°C]) as indicated above. Rotate the thermostat dial **counter-clockwise** ↙ to decrease the temperature setting. Rotate the thermostat dial **clockwise** ↘ to increase the temperature setting. Adjust the dial until the minimum acceptable temperature is achieved (See figure 4 and 5 above for approximate temperature settings).

# Thermostat Adjustment – ICON® System Electronic Gas Control (Resideo V1)

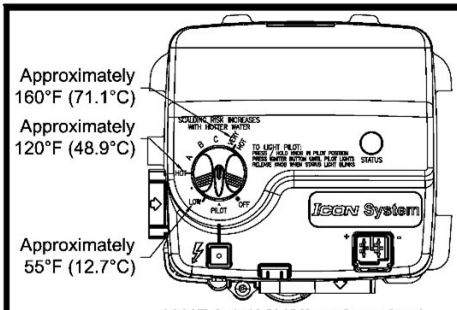


160°F (71.1°C)(Silver faceplate)

Fig. 6

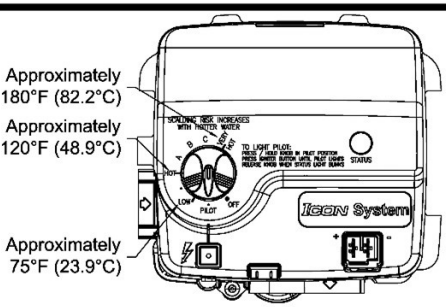


180°F (82.2°C)(Grey faceplate)

Fig. 7

The thermostat dial is set to its lowest temperature setting when shipped from the factory. **Remember that lower temperature settings are more energy efficient**. Adjust the temperature by turning the thermostat dial. It is suggested that the starting point setting not be greater than the "HOT" mark on the thermostat dial (approximately 120°F [48.9°C]) as indicated above. Rotate the thermostat dial **counter-clockwise** to decrease the temperature setting. Rotate the thermostat dial **clockwise** to increase the temperature setting. Adjust the dial until the minimum acceptable temperature is achieved (See figure 9 and 10 above for approximate temperature settings).

# Thermostat Adjustment – ICON® System Electronic Gas Control (Resideo V2)

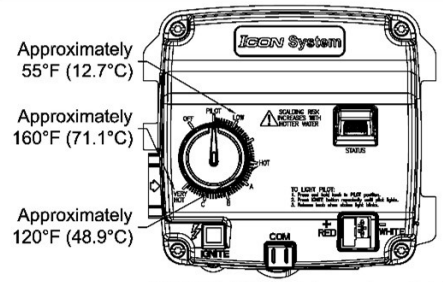


160°F (71.1°C)(Light grey faceplate)

Fig. 8

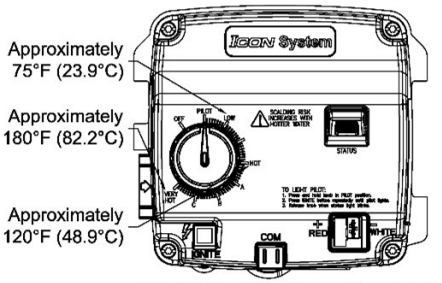


180°F (82.2°C)(Dark grey faceplate)

Fig. 9

The thermostat dial is set to its lowest temperature setting when shipped from the factory. **Remember that lower temperature settings are more energy efficient**. Adjust the temperature by turning the thermostat dial. It is suggested that the starting point setting not be greater than the "HOT" mark on the thermostat dial (approximately 120°F [48.9°C]) as indicated above. Rotate the thermostat dial **counter-clockwise** to decrease the temperature setting. Rotate the thermostat dial **clockwise** to increase the temperature setting. Adjust the dial until the minimum acceptable temperature is achieved (See figure 11 and 12 above for approximate temperature settings).

**⚠ DANGER**

Hotter water increases the risk of scald injury. Scalding may occur within five (5) seconds at a temperature setting of 140°F (60°C). To protect against hot water injury, install an ASSE approved mixing valve in the water system. This valve will reduce point of discharge temperature by mixing cold and hot water in branch water lines. A licensed plumbing professional or local plumbing authority should be consulted.

**Note:** This water heater is equipped with an energy cut out device to prevent overheating. Should overheating occur or the gas supply fails to shut off, turn off the manual gas control valve to the appliance and call a qualified service technician.

**Note:** Whenever the water heater is filled with cold water, condensate will form on the cool tank surface and drops of water will fall on the hot burner and combustion chamber surfaces producing a "sizzling" noise. Condensation is normal and does not indicate a leak. It will disappear when the tank becomes heated.

## Burner Flame Checks

**Cast Iron Burner:** At the time of installation and at periodic intervals (not more than 6 months), a visual check of the main burner and pilot flames should be made to determine if they are burning properly. For ideal operation, the gas and air must be properly proportioned. The proper air-gas mixture is obtained by adjusting the air shutter on the mixer face of the main burner (Figure 10). To adjust for proper burning, loosen the air shutter nut, rotate shutter to close the opening in the burner then slowly rotate the shutter until the yellow tips disappear, and the flame becomes blue. Tighten the air shutter nut. Too much air will cause the flame to lift off the burner ports and create noisy operation. Too little air will result in soot formation. The main burner flame should light smoothly from the pilot.

**Steel Burner:** These models are equipped with self-adjusting air mixture and do not have an adjustable air shutter (Figure 11). At periodic intervals, a visual check of the main burner and pilot flames should be made to determine if they are burning properly. The main burner flame should light smoothly from the pilot.

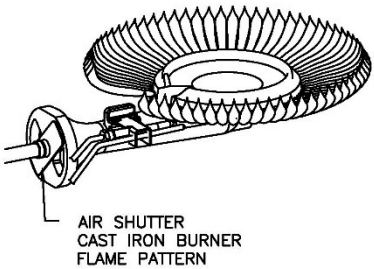


Fig. 10

PILOT BURNER IN OPERATION

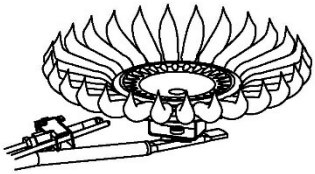

NATURAL GAS
STEEL BURNER

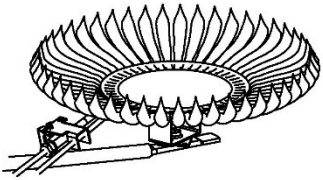

LP GAS STEEL BURNER

Fig. 11

## Burner Flame Checks continued-

**⚠ WARNING**

**Do not run out of propane gas. Damage to the water heater may occur.**

**⚠ WARNING**

Water heaters are heat producing appliances. To avoid damage or injury there must be no materials stored against the water heater or vent-air intake system, and proper care must be taken to avoid unnecessary contact (especially by children) with the water heater and vent-air intake system. **UNDER NO CIRCUMSTANCES SHOULD FLAMMABLE MATERIALS, SUCH AS GASOLINE OR PAINT THINNER TO BE USED OR STORED IN THE VICINITY OF THIS WATER HEATER, VENT-AIR INTAKE SYSTEM OR IN ANY LOCATION FROM WHICH FUMES COULD REACH THE WATER HEATER OR VENT-AIR INTAKE SYSTEM.**

# MAINTENANCE

The following maintenance should be performed by a qualified service technician at the minimum periodic intervals suggested below. In some installations, the maintenance interval may be more frequent depending on the amount of use and the operating conditions of the water heater. Regular inspection and maintenance of the water heater and vent-air intake system will help to insure safe and reliable operation.

1. Annually check the operation of the thermostat.
2. The flow of combustion and ventilation air must **NOT** be restricted. Clear the combustion air openings of any dirt, dust, or other restrictions.

**⚠ WARNING**

**The ventilation air system may be HOT.**

3. At all times keep the water heater area clear and free from combustible materials, gasoline and other flammable vapors and liquids.
4. Bi-annually conduct a visual check of the main and pilot burner flames to determine that they are burning properly. See Burner Flame Check section.
5. Annually remove the inner door and main burner assembly to clean orifices and related parts of any dirt or other foreign material. Inspect the burner ports for obstructions or debris and clean with a wire brush as needed. Wire brush and/or vacuum clean the combustion chamber as needed to remove scale deposits and debris. **NOTE:** It is imperative for proper operation of the water heater that the inner door be replaced in the original location.

## Maintenance continued-

**⚠ WARNING**

When lifting lever of the combination temperature and pressure relief valve, hot water will be released under pressure. Be careful that any released water does not result in bodily injury or property damage.

**⚠ WARNING**

**Do not run out of propane gas. Damage to the water heater may occur.**

6. At least once a year, check the combination temperature and pressure relief valve to ensure that the valve has not become encrusted with lime. Lift the lever at the lever at the top of the valve several times until the valve seats properly without leaking and operates freely.
7. Monthly drain off a gallon of water to remove silt and sediment.

**⚠ WARNING**

**THIS WATER MAY BE HOT.**

8. If the combination temperature and pressure relief valve on the appliance discharges periodically, this may be due to thermal expansion in a closed water supply system. Contact the water supplier or local plumbing inspector on how to correct this situation. Do not plug the combination temperature and pressure relief valve outlet.
9. A combination sacrificial anode rod/hot water outlet nipple has been installed to extend tank life. The anode rod should be inspected periodically (every 2 years) and replaced when necessary to prolong tank life. Water conditions in your area will influence the time interval for inspection and replacement of the anode rod. Contact the plumbing professional who installed the water heater, or the manufacturer listed on the rating plate for anode replacement information. The use of a water softener may increase the speed of anode consumption. More frequent inspection of the anode is needed when using softened (or phosphate treated) water.
10. Vent pipe and vent hood screen should be cleaned of any foreign material. The screen is located inside the vent hood outlet and is accessible from the outside of the hood. Do not reach inside the vent hood when the water heater is in operation.

**⚠ CAUTION**

For your safety, do not attempt repair of combination gas control, burners or gas piping. Refer repairs to a qualified service technician.

**IMPORTANT**

The water heater should be inspected at a minimum annually by a qualified service technician for damaged components and/or joints not sealed. **DO NOT** operate this water heater if any part is found, damaged, or if any joint is found not sealed.

## Troubleshooting - ICON® System Electronic Gas Control (Resideo V1)

| LED Status | Control Status | Probable Cause |
|---|---|---|
| None<br>(LED not on or flashing) | Millivolt power is not present. Light pilot. | 1. Gas valve is functioning normally.<br>2. Gas valve is not powered. Light pilot. |
| One flash and three second pause | If set point knob is in “PILOT” position, then pilot flame is detected. **(no faults).** | Gas valve is powered and waiting for the set point knob to be turned to a water temperature setting. If the set point knob is at desired setting the thermostat is satisfied. |
| LED strobe (two quick flashes) and three second pause | Thermostat calling for heat **(no faults).** | Water heater operating normally. |
| LED on continuously | Set point knob has been recently turned to the “OFF” position | Set point know was recently turn to “OFF” position. Wait until LED goes out before attempting to relight. |
| Two flashes and three second pause | Weak pilot flame detected. System will reset when pilot flame is sufficient. | 1. Gas valve is functioning normally.<br>2. Gas valve is not powered. Light pilot. |
| Three flashes and three second pause | Insufficient water heating. System will reset. | 1. Temperature sensor out of calibration.<br>2. Possible short |

## Troubleshooting - ICON® System Electronic Gas Control (Resideo V1) continued

| LED Status | Control Status | Probable Cause |
|---|---|---|
| Four flashes and three second pause | Excessive tank temperature. System must be reset. | 1. Temperature sensor out of calibration<br>2. Faulty gas valve. |
| Five flashes and three second pause | Temperature sensor fault. | 1. Damage to the temperature wire.<br>2. Temperature sensor resistance out of range.<br>3. Replace temperature sensor.<br>4. If temperature sensor replacement does not correct the problem; verify control is not wet or physically damaged.<br>5. Turn set point knob to “OFF” position. Turn set point knob to “PILOT” position and light pilot.<br>6. Replace gas valve if five flash error persists. |

| | | |
|---|---|---|
| Six flashes and three second pause | Water leak detected by accessory module (some models). | Excessive amount of water in drain pan/water dam. |
| Seven flashes and three second pause | Gas valve electronic fault detected. | 1. Verify control is not wet or physically damaged.<br>2. Turn set point knob to “OFF” position. Turn set point knob to “PILOT” position and light pilot.<br>3. Replace gas valve if seven flash error persists. |
| Eight flashes and three second pause | False pilot flame present. | 1. Pilot valve stuck in open position.<br>2. Turn set point knob to “OFF” position. Turn set point knob to “PILOT” position and light pilot.<br>3. Replace gas valve if eight flash error persists. |

## Troubleshooting - ICON® System Electronic Gas Control (Resideo V2)

| LED Status | Control Status | Probable Cause |
|---|---|---|
| None<br>(LED not on or flashing) | Millivolt power is not present. Light pilot. | Gas valve is functioning normally. Gas valve is not powered. Light pilot. |
| One flash every four seconds (LED green) | Not an error. Indicates pilot is lit and main burner is off. | You can now turn the knob to a desired setpoint temperature. |
| One flash every second (LED green) | Not an error. Indicates main valve is open and main burner is lit. | None. Control will automatically shut main burner off when water temperature reaches the setpoint temperature. |
| Two flashes and three second pause<br>(LED yellow) | Low thermopile voltage; main valve not turned ON. | Check thermopile and its connections. Check pilot flame. |
| Four flashes and three second pause (LED red) | Temperature cut-out limit reached, causing shutdown. | Check the valves and the water temperature sensor. Reduce the water temperature setpoint. Verify control operation, replace if exceeding setpoint. |
| Five flashes and three second pause (LED red) | Electronics, sensor, or gas valve fault detected. | Check water temperature sensor and its connection for open circuits, shorts, or differences in resistance between the two sensor elements. |
| Solid ON<br>(LED red) | Not an error-indicates that the control is in OFF mode. | None; wait until LED turns off if you want to restart system. |

# Troubleshooting Chart - ICON® System Electronic Gas Control (SIT)

| LED Status | Control Status | Probable Cause |
|---|---|---|
| None (LED not on or flashing) | Indicates control is off. Main and pilot burner are off. | Gas valve is functioning normally. Gas valve is not powered. Light pilot. |
| One flash every four seconds | Not an error. Indicates pilot is lit and main burner is off. | Gas valve is powered and waiting for the set point knob to be turned to a water temperature setting. If the set point knob is at desired setting, the thermostat is satisfied. |
| One flash every second | Not an error. Indicates main valve is open and main burner is lit. | Thermostat is calling for heat. Water heater operating normally and is in heat cycle. |
| Solid ON | Not an error. Indicates that the control is in shutdown mode. | Set point knob was recently turned to “OFF” position. Wait until LED goes out before attempting to relight. |
| Two flashes and three second pause | Low thermopile voltage; main burner not lit. | Loose thermopile connections or weak pilot flame. |
| Four flashes and three second pause | Temperature cut-out limit reached causing shutdown. | Excessive temperatures may have been reached. Shut off the control and reduce the water temperature. Thoroughly verify control operation, replace if exceeding setpoint. |
| Five flashes and three second pause | Electronics, sensor, or gas valve fault detected. | Control may be wet or damaged. Verify all connections are tight; if problem persists replace the control. |

Contact your supplier or plumbing professional for replacement parts or contact the company at the address given on the rating plate of the water heater. For faster service, provide the part name, model and serial numbers of the water heater when ordering parts.

**IMPORTANT**

Read the warranty for a full explanation of the length of time that parts and the water heater are warranted.

**This product is covered under one or more of the following patents and or patent pending applications:**

CA2,430,807 CA2,844,271 EP1369647 GB1369647 NL1369647 TWI276761 US7,559,293 US7,900,589 US7,007,748 CA2,476,685 US7,063,132 CA2,409,271 US6,684,821 US7,337,517 US7,665,211 US7,665,210 US7,699,026 CA2,504,824 US6,935,280 AU2007201423 CA2,583,609 EP1840484 GB1840484 NL0840484 US7,634,976 US7,270,087 US7/621,238 US7,334,419 US7,866,168 CA2,491,181 US7,063,133 CA2,677,549 US8,082,888 AU2007201424 CA2,583,108 EP1840481 GB1840481 NL1840481 CA2,659,534 US7,971,560 US7,992,526 US8,146,772 US8,707,558 CA2,548,958 MX243220 US6,422,178 TWI649522 US9,429,337 CA3,001,716 GB2558134 GB2013252.8 US10,866,010 US17/109,618 US10,503,183 US20/42096 CA2,949,830 DE112015002523.5 GB2540513 US9,574,792 US15/436,425 CA3,059,965 EP18784108.5 MX/a/2019/012268 US15/486,816 US17/038,087 US7,007,316 US7,243,381 CA2,784,312 US8,787,742 DE112014002713.8 GB2533862 US9,964,241 US6,644,393 US8,851,022 USD636,857 US8,931,438 CA2,899,271 US10,495,343 CA2,918,211 US10,094,619 US15/621,063 US16/474,833 US16/281,599

**Complete the following information and retain for future reference:**

**Model No:** _____

**Serial No:** _____

**Service Phone:** _____

**Days:** _____ **Nights:** _____

**Address:** _____

**Supplier:** _____

**Supplier Phone No:** _____

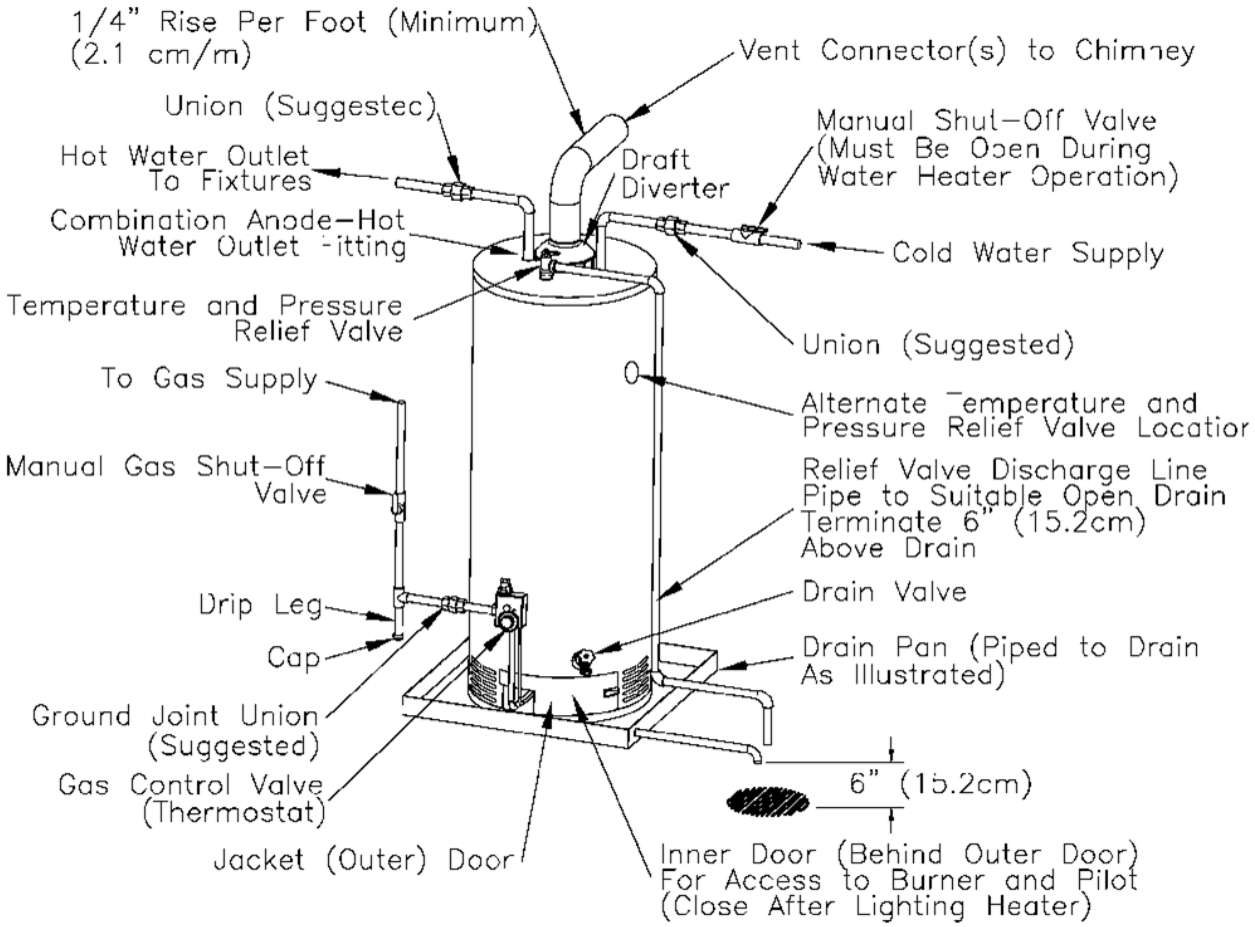
1/4" Rise Per Foot (Minimum)
(2.1 cm/m)
Vent Connector(s) to Chimney
Union (Suggestec)
Manual Shut-Off Valve
(Must Be Open During
Water Heater Operation)
Hot Water Outlet
To Fixtures
Draft
Diverter
Combination Anode-Hot
Water Outlet Fitting
Cold Water Supply
Temperature and Pressure
Relief Valve
Union (Suggested)
To Gas Supply
Alternate Temperature and
Pressure Relief Valve Locatior
Manual Gas Shut-Off
Valve
Relief Valve Discharge Line
Pipe to Suitable Open Drain
Terminate 6" (15.2cm)
Above Drain
Drip Leg
Drain Valve
Cap
Drain Pan (Piped to Drain
As Illustrated)
Ground Joint Union
(Suggested)
Gas Control Valve
(Thermostat)
6" (15.2cm)
Jacket (Outer) Door
Inner Door (Behind Outer Door)
For Access to Burner and Pilot
(Close After Lighting Heater)

# PARTS LIST AND DRAWING

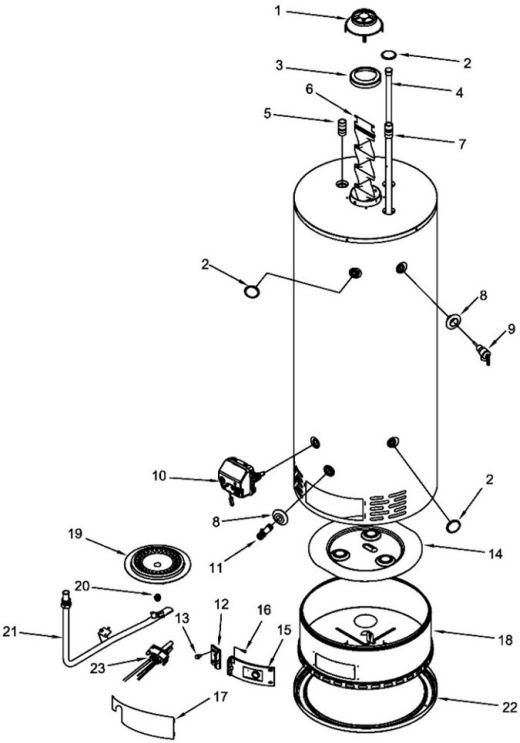


| PART NAME AND DESCRIPTION | |
|---|---|
| 1. Draft Diverter | 13. Hex Screw 10-12 x 3/4 |
| 2. Hole Closure | 14. Radiation Shield |
| 3. Flue Reducer | 15. Inner Door (Right Side) |
| 4. Magnesium Anode | 16. Hex Screw 8-15 x 3/4 |
| 5. Nipple | 17. Outer Door |
| 6. Flue Baffle Assembly | 18. Combustion Chamber |
| 7. Dip Tube-Cold Water Inlet | 19. Steel Burner |
| 8. Escutcheon | 20. Orifice |
| 9. Temperature & Pressure Relief Valve | 21. Gas Burner Feedline |
| 10. Combination Gas Control & Thermostat | 22. Jacket Base Pan |
| 11. Drain Valve | 23. Pilot Assembly |
| 12. Inner Door (Left Side) | |

# INSTRUCTIONS FOR INSTALLATIONS SUITABLE FOR WATER (POTABLE) HEATING AND SPACE HEATING

Instructions are as follows:

1. All piping components connected to this water heater for space heating applications must be suitable for use with potable water. In Massachusetts, space heating piping length must **NOT** exceed 50 ft.
2. Toxic chemicals, such as those used for boiler treatment, must **NOT** be introduced into potable water used for space heating.
3. This water heater must **NOT** be connected to an existing heating system or component(s) previously used with a non-potable water heating appliance.
4. When the system requires water for space heating at temperatures higher than required for other uses, an ASSE approved mixing valve shall be installed to temper the water for those uses in order to reduce scald hazard potential.
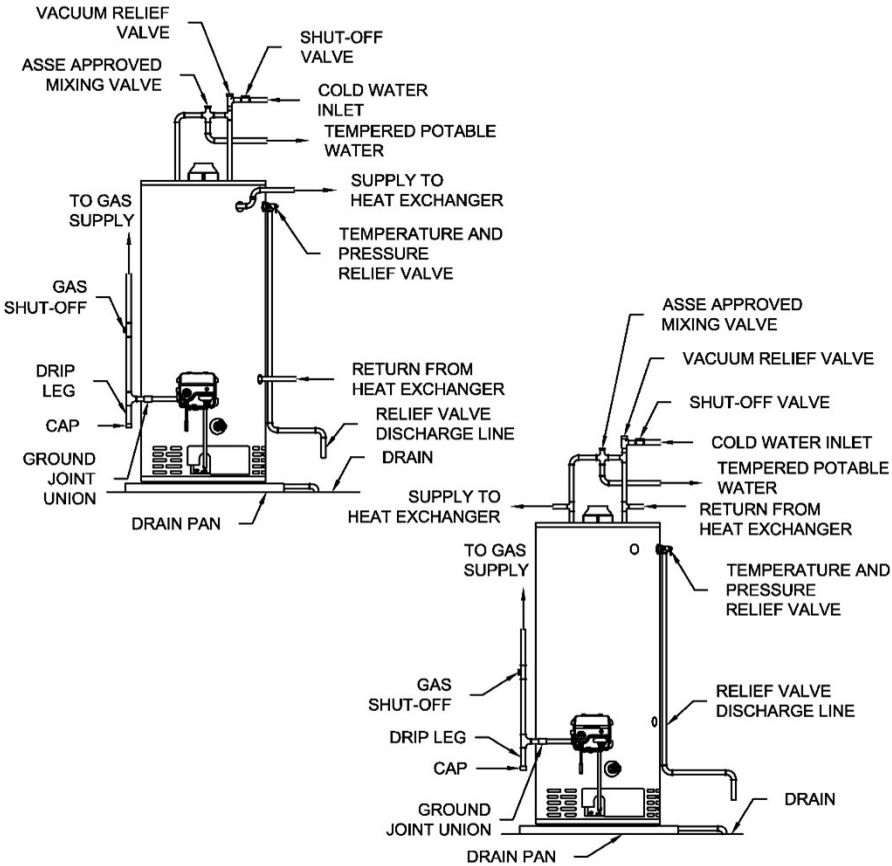
Please refer to the illustrations below for the suggested piping arrangement.