INSTALLATION AND SERVICE MANUAL

Electric Power Water Heater

15kW – 360kW

NOTE: retain this manual for future reference

Installation and service must be performed by Qualified Service Personnel Only.

WARRANTY:

Factory warranty (available on web site) does not apply to units improperly installed or improperly operated.

Experience has shown that improper installation or system design, rather than faulty equipment, is the cause of most operating problems.

Excessive water hardness causing a lime/scale build-up in the heater and/or on the immersion heating elements is not the fault of the equipment and is not covered under the manufacturer's warranty. (See Water Treatment and Water Chemistry)

Do not energize electrical system before heater is completely filled with water. Damage caused to the immersion heating elements by dry fire is not covered under the manufacturer's warranty. Follow start up procedure in the manual. Water heater corrosion and component failure caused by air-borne chemical vapors is not covered under the manufacturer's warranty. Corrosion damage caused by current leakage due to improper grounding of electrical systems or electronic components to the storage tank and related piping is not covered by the manufacturer's warranty. Under no circumstance will the manufacturer be liable for consequential damages resulting from the installation or use of this equipment. Correct installation procedures and local codes must be adhered to.

SPECIAL INSTRUCTIONS TO OWNER:

WARNING:

Improper Installation, Adjustment, Alteration, Service or Maintenance can cause injury, property damage or death. Refer to this manual. For assistance or additional information consult a qualified installer, service agency or the electric utility

CHECKING EQUIPMENT:

This manual supplies information for the installation, operation and servicing of the appliance. It is strongly recommended that this manual be reviewed completely before proceeding with an installation. Upon receiving equipment, check for signs of shipping damage. Pay particular attention to parts accompanying the water heater, which may show signs of being hit or otherwise being mishandled. Verify total number of pieces shown on packing slip with those actually received. In case there is damage or a shortage, immediately notify carrier.

DO NOT USE THIS APPLIANCE IF ANY PART HAS BEEN UNDER WATER. THE POSSIBLE DAMAGE TO A FLOODED APPLIANCE CAN BE EXTENSIVE AND PRESENT NUMEROUS SAFETY HAZARDS. ANY APPLIANCE THAT HAS BEEN UNDER WATER MUST BE REPLACED.

WARNING A

If the information in this manual is not followed exactly, a fire or explosion may result causing property damage, personal injury or loss of life. Do not store or use gasoline or other flammable vapors and liquids in the vicinity of this or any other appliance.

CONTENTS

Warranty 1

Safety Warnings 1

Checking the Equipment 2
Codes 6

Installation Requirements

Location 6
Drain Pan Requirements 6

Clearances 7
Mounting 8
Water Connections 8
Tank Construction 8
Relief Valve 9
Thermal Expansion 9
Cathodic Protection 9

Electrical Service

Electrical Connection 10
Wire Sizing 10
Fusing 10
Jacket Assembly 11
Standard and Optional Controls 12

Components and Controls

Terminal Block 13
Fuses and Fuse Blocks 13
Contactors 14
Transformer 14
Immersion Thermostat 14
Temperature Regulation 15
Risk of Scald Warnings 16
Temperature Adjustment 17
Temperature Control Sequencer 17
Display 17
Error Messages 16
Temperature Limit Control 17
Immersion Heating Elements 18
Safety Door Lock 18
Low Water Cut-Off 19
Low Water Pressure Switch 19
High Water Pressure Switch 19
Manual Limiting Switches 19
Time Clock 20
Pilot Lights 20
Alarm Bell 20

Start-Up Procedure

Filling the Water Heater 22
Start-Up Checks 23
Shutdown Procedure 24

Maintenance

T&P Relief Valve 25
Water Chemistry 25
Flushing the Tank 26
Sediment Removal 26
Scale Removal - Elements 26

Trouble Shooting

Not Enough Hot Water 28
Water Is Too Hot 29
Water Heater Sounds 29
Leakage 29

Piping Diagrams

Piping Schematic 30

Wiring Diagrams

Power Circuits 31
Controls & Options 32

Parts List

Tank Assembly Drawing 33
Parts List 34

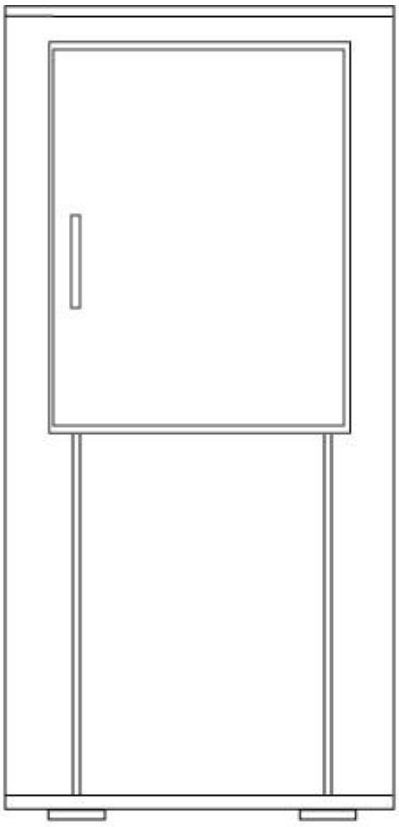

Fig. 1. Front View - Round Vertical Models

OWNER WARNING:

The information contained in this manual is intended for use by qualified professional installers, service technicians or the electric utility. Consult your local expert for proper installation or service procedures.

IMPORTANT:

Consult and follow local Electrical Codes, Building and Fire Regulations and other Safety Codes that apply to this installation. Consult local codes officials and electric utility company to authorize and inspect all field installed electrical connections.

CAUTION:

Be sure to turn off power when working on or near the electrical system of the water heater. Never touch electrical components with wet hands or when standing in water. When replacing fuses, always use the correct size for the circuit. Do not test the electrical system before the water heater is completely filled with water. Follow the start-up procedure.

WARNING

To minimize the possibility of serious personal injury or death, fire or damage to your appliance, never violate the following safety rules:

1. Always keep the area around your appliance free of combustible material, gasoline and other flammable liquids and vapors.
2. Never cover your appliance, lean anything against it, store trash or debris near it, stand on it or any way block the access to your appliance.

CODES:

The equipment shall be installed in accordance with those installation regulations in force in the local area where the installation is to be made.

These shall be carefully followed in all cases. Authorities having jurisdiction shall be consulted before installations are made. In the absence of such requirements, the installation shall conform to the latest edition of the National Electrical Code, NFPA 70. When the appliance is installed in Canada, it must conform to the CAE C22.1, Canadian Electrical Code, Part 1 and/or local Electrical Codes.

APPROVALS:

This complete appliance is designed certified and Listed by Underwriters Laboratories as a commercial storage electric water heater. This water heater bears the UL certification for the United States as tested under the Standard for Electric Booster and Commercial Storage Tank Water Heaters, UL1453 and C-UL in Canada as tested under the Standard for Construction and Test of Electric Storage Tank Water Heaters, CAN/CSA-C22.2 No. 110-M90. All water heater storage tanks conform to the latest edition of the ASME Boiler and Pressure Vessel Code, Section IV.

INSTALLATION PROCEDURE LOCATION OF UNIT

1. Locate the appliance so that if water connections should leak, water damage will not occur. When such locations cannot be avoided, it is recommended that a suitable drain pan, adequately sized, be installed under the unit. Under no circumstances is the manufacturer to be held responsible for water damage in connection with this unit, or any of its components.
2. Ensure that the appliance is located near an acceptable drain so that the vessel can be properly drained when performing service or maintenance. The drain must also provide adequate drainage in the event of leakage the tank or related piping. The drain must prevent water damage to the adjacent area and lower floors of the structure.
3. The appliance must be installed so that the electrical components are protected from water (dripping, spraying, etc.) during appliance operation and service (replacing of fuses, elements, etc.)
4. Appliances located in a garage or parking structure shall be installed so that the jacket and all piping shall be located or protected so that it is not subject to physical damage by a moving vehicle.
5. The appliance must be installed on a level floor. Shim the base as necessary if leveling is required.
6. The floor on which the appliance is installed must be capable of supporting the total weight of the water heater when completely filled with water. Combustible floor locations may be used. Maintain required clearances from combustible surfaces.
7. The appliance must not be installed on carpet.

8. The appliance must be installed indoors where it is protected from exposure to wind, rain and weather.
9. Locate the appliance as close as possible to the point of major hot water usage, the water piping and branch electrical circuit wiring.
10. Insulate water piping to control heat loss and possible condensation.
11. The appliance must be located in an area that is not subject to freezing. The ambient temperature of the space where the appliance is installed must not go below 32° F (0° C) or above 104° F (40° C).

CAUTION:

Installation of the water heater should be accomplished in such a manner that if the tank, piping or any connections should leak, the flow of water will not cause damage to the structure. For this reason, it is not advisable to install the water heater in an attic or upper floor. When such locations cannot be avoided, a suitable drain pan must be installed under the water heater. Drain pans may be fabricated or purchased from your plumbing wholesaler. The drain pan must be piped to an adequate drain. Under no circumstances is the manufacturer to be held liable for any water damage in connection with this water heater.

TABLE A – CLEARANCES FROM COMBUSTIBLE CONSTRUCTION:

Right Side -	6” (15cm)
Rear	0”
Left Side	Inspection Opening & Anode Rods (If the tank is glass lined) 26” for 150-300 gallon & SS tanks 32” for 300, 400 & 800 gallon 38” for 500, 600, 1000 gallon & larger
Front	36” (0.91m) for service to controls and heating elements.
Top	12” (30cm) for service access to electrical service, water connections and piping
Water Pipes	1” (25.4mm)

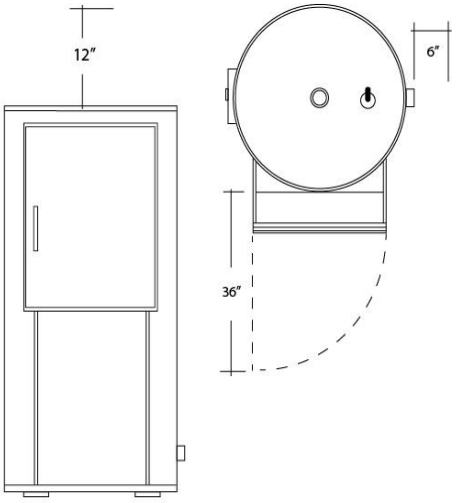

Fig. 2. Clearances from Combustible Construction

Maintain minimum specified clearances for adequate operation. All installations must allow sufficient space for servicing the electrical components, water pipe connections, piping and other auxiliary equipment, as well as the appliance.

MOUNTING:

The water heater should be mounted to the floor following applicable architectural and local code requirements or accepted standards for the specific site and model purchased. In areas prone to seismic activity, it is recommended that the water heater be mounted to the floor according to recommended procedures for the site. In some geographic areas, additional strapping or braces may be required, consult local codes for specific requirements. Proper mounting will help to make the water heater less susceptible to seismic damage.

WATER CONNECTIONS:

NOTE:

Before making any connections to the cold water inlet or hot water outlet, ensure that all piping is clean and free of material or scale. This can usually be accomplished by "blowing out the pipe." Any foreign material or scale entering the water heater can adversely affect operation and performance.

NOTE:

When using copper tubing, solder tubing to an adapter before attaching to the threaded nipple connection provided on the water heater. Soldering directly to the threaded connection may harm a lining in the nipple or damage the tank lining.

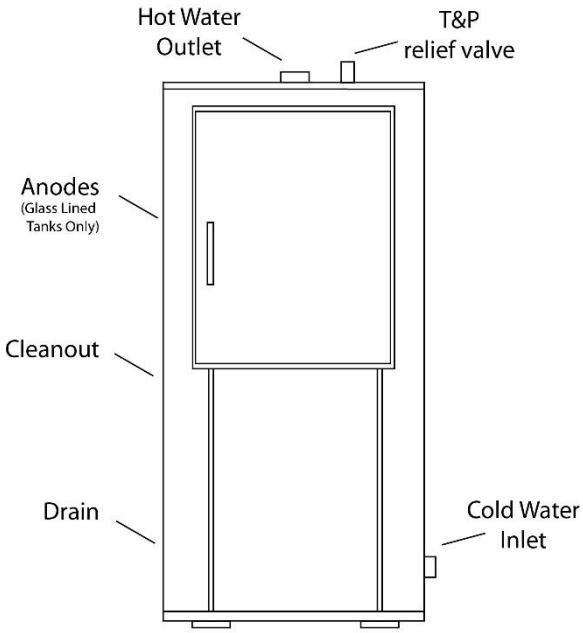

Fig. 3. Water Connections

Inlet and outlet connections (See specific instructions for 316L & Duplex alloy tanks)

All inlet and outlet connections shall include dielectric unions or flanges to isolate the tank from dissimilar metal corrosion or other corrosive electrical currents introduced into the plumbing system. This must be done in the field during installation. The cold water inlet connection is located on the lower right side of the water heater. A manual shutoff valve should be installed upstream on the cold water source as an isolation device. The hot water outlet connection is located on the top center of the water heater. A manual shutoff valve should be installed downstream on the hot water outlet source as an isolation device in case the water heater must be disconnected from the system. Additional custom fittings may be present and should have dielectric unions or flanges installed and isolation valves for service.

STORAGE TANK (glass lined):

This appliance uses a glass lined steel tank to store the heated water for use. The storage tank is constructed in accordance with the ASME Boiler and Pressure Vessel Code requirements, stamped and registered with the National Board of Boiler and Pressure Vessel Inspectors. The tank is furnished with threaded connections for cold water inlet, hot water outlet, a relief valve and a drain connection. The storage tank has hand hole for ease of inspection, cleanout and service. An optional manhole may be specified for a

greater ease of inspection. The interior of the storage tank is glass lined and fired to ensure a molecular fusing of glass and steel to protect the steel base metal against corrosion. A magnesium anode(s) is standard to enhance the protection of the substrate metal of the tank.

Storage Tank - 316L Stainless Steel – See next page.

Storage Tank – Duplex Stainless Steel – See next page.

RELIEF VALVE:

This water heater is supplied with a temperature and pressure relief valve(s) sized in accordance with ASME Boiler and Pressure Vessel Code, Section IV. Some water heaters may be supplied with an optional pressure only relief valve. The relief valve(s) is installed in the vertical position and mounted in the tapping provided in the storage tank. No valve is to be placed between the relief valve and the water heater. To prevent water damage, the discharge from the relief valve must be piped to a suitable floor drain for disposal when relief occurs. No reducing couplings or other restrictions shall be installed in the discharge line. The discharge line shall allow complete drainage of the valve and line. Relief valves should be manually operated at least once a year. A relief valve that fails to completely reseat and continues to discharge water must be immediately replaced with a new, properly sized, temperature and pressure relief valve.

CAUTION:

Avoid contact with hot discharge water. Ensure that no one is in front of or around the relief valve discharge line. Make sure that the extremely hot water manually discharged from the relief valve will not cause bodily injury or property damage.

THERMAL EXPANSION OF WATER:

A relief valve that discharges periodically may be due to thermal expansion in a closed system. A water heater installed in a closed system, such as one with a backflow preventer or check valve and installed in the cold water supply, shall be provided with means to control expansion. Contact the water supplier or local plumbing inspector on how to correct this situation. **DO NOT plug or cap the relief valve.**

CATHODIC PROTECTION (Glass lined tanks only):

Hydrogen gas can be produced in a hot water system that has not been used for a long period of time (generally two weeks or more). Hydrogen gas is extremely flammable. To prevent the possibility of injury under these conditions, we recommend the hot water faucet be open for several minutes at a sink close to the water heater before you use any electrical appliance which is connected to the hot water system. If hydrogen is present, there will be an unusual sound such as air escaping through the pipe as the hot water begins to flow. There should be no smoking or open flames near the faucet at the time it is open.

Storage Tank (316L Stainless Steel):

This appliance is made of 316L stainless steel to store heated water. The storage tank is constructed in accordance with the ASME boiler and pressure Vessel Code requirements, stamped and registered with the National Board of Boiler and Pressure Vessel Inspectors. The tank is furnished with threaded connections for cold water inlet, hot water outlet, a relief valve and a drain connection. The storage tank has a handhole for ease of inspection, cleanout and service. An optional manhole may be specified for a greater ease of inspection. The interior of the storage tank is passivated to ensure the metal is clean and ready for service. 316L Stainless Steel is susceptible to corrosion in the presence of chlorides above 3 ppm and 140 degrees F. All inlet and outlet connections shall be stainless steel and connections to external piping shall be dielectrically isolated using dielectric unions or flanges. Additional custom fittings may be present and should have dielectric unions or flanges installed and isolation valves for service. Bradford White Water Heaters is not responsible for corrosion of the tank.

Storage Tank (Duplex Stainless Steel):

This appliance is made of Duplex stainless steel to store heated water. The storage tank is constructed in accordance with the ASME boiler and pressure Vessel Code requirements, stamped and registered with the National Board of Boiler and Pressure Vessel Inspectors. The tank is furnished with threaded connections for cold water inlet, hot water outlet, a relief valve and a drain connection. The storage tank has a handhole for ease of inspection, cleanout and service. An optional manhole may be specified for a greater ease of inspection. The interior of the storage tank is passivated to ensure the metal is clean and ready for service. All inlet and outlet connections shall be stainless steel and connections to external piping shall be dielectrically isolated using dielectric unions or flanges. Additional custom fittings may be present and should have dielectric unions or flanges installed and isolation valves for service.

ELECTRICAL CONNECTIONS:

All installation procedures involving electric power connection should only be performed by a trained, certified electrician. The appliance, when installed, must be electrically grounded in accordance with the requirements of the authority having jurisdiction or in the absence of such requirements, with the latest edition of the National Electrical Code, NFPA No. 70. When the appliance is installed in Canada, it must conform to the CAE C22.1, Canadian Electrical Code, Part 1 and/or local Electrical Codes.

1. Use copper conductors only. All wiring between the appliance and field installed devices shall be made with copper wire suitable for at least 75° C (167° F) temperature rating. If the wiring from an old water heater installation was aluminum, replace the old wire with copper wire.
2. The factory internal wiring is attached to a terminal block inside the unit. The branch circuit is connected to the terminal block through an opening provided on the top of the water heater electrical access panel.
3. Line voltage wire exterior to the appliance must be enclosed in approved conduit or approved metal clad cable.
4. To avoid serious damage, **DO NOT** energize the appliance until the system is full of water. Ensure that all air is removed from the storage tank and piping before beginning initial operation. Operation of a water heater without a completely filled tank may result in serious damage to the appliance and

heating element burn out.

5. The water heater should be connected with a separate grounded branch circuit with over current protection and disconnect switch. The water heater should be grounded in accordance with national and local codes. A ground terminal is provided for ground connection only.
6. Provide the appliance with proper overload protection in the branch circuit. It is suggested that the electrician size the branch circuit at 125 percent of the heater ampere rating and further increase wire size as necessary to compensate for voltage drop in long runs. Branch circuit voltage drop should not exceed 3% at the heater.
7. Voltage applied to the heater should not vary more than +5% to -10% of the model and rating plate marking for satisfactory operation.
8. A wiring diagram is provided with the water heater for the electricians use.

WARNING:

WATER HEATER IS EQUIPPED FOR OPERATION ON ONE VOLTAGE ONLY. Check the rating plate label for the correct voltage and phase. DO NOT use this water heater with any other voltage other than the voltage specified on the rating plate label. Failure to use the correct voltage can cause problems that can result in death, serious bodily injury or property damage.

CAUTION:

DO NOT CONNECT THE WATER HEATER TO AN IMPROPER SOURCE OF ELECTRICITY!

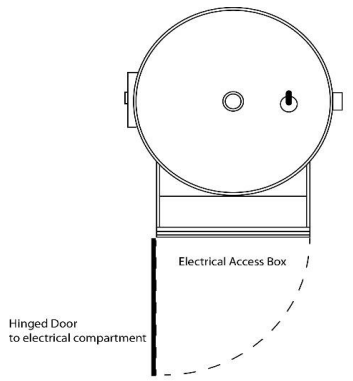

Fig. 4. Electrical Power Connections

CAUTION:

Never turn on the electric power or attempt to use this electric water heater unless it is completely full of water. Water must flow from the hot water faucet before turning electrical power "ON." Operation of a water heater without a completely filled tank may result in serious damage to the appliance and heating element burn out.

JACKET ASSEMBLY:

Outer Jacket - The outer jacket assembly is constructed from steel, painted with enamel on both sides. This coating process ensures a long life from the jacket assembly.

STANDARD EQUIPMENT:

Your commercial electric water heater is equipped with the following as standard equipment:

- Low watt density immersion heating elements with an Incoloy sheath.
- Internal fusing of all elements in a maximum of 48 amp increments provide additional safety. Fuse cartridges are related at 1,000,000 amps interrupting capacity.
- A painted enamel steel outer jacket and electrical control panel are provided.
- Channel iron skid base.
- An electrical control panel is provided with a hinged door and key lock.
- A glass lined steel tank constructed to ASME specifications and provided with magnesium anode(s).
- ASME rated temperature and pressure relief valve provided by factory to ensure safe heater operation.
- Terminal block connections are installed by the factory for safe easy wiring connection.
- Manual reset high water temperature limit control.
- Immersion thermostat (one per 54kW of input as standard).
- 180°F (82.2°C) temperature operation is possible to provide water for sanitizing applications.
- 150 PSI
- Insulated to meet the latest edition of ASHRAE 90.1 energy efficiency standards.
- 3 year limited warranty provides protection against failure of tanks due to defects in material and workmanship. 25 year (15 year full 10 year pro-rated) warranty for Duplex Stainless Steel
- Underwriter's Laboratories, Inc., listing for all models as a commercial electric water heater.

OPTIONAL EQUIPMENT:

The following items are available as extra cost options:

- Electronic low water cut-off prevents energizing of the heater when it is not filled with water.
- Pilot lights - Monitor on-off cycle of contactors.
- Manual limiting switches with indicating lights to permit heater kW input to be manually limited as desired.
- Temperature and pressure gauges are available installed flush with the jacket to monitor heater performance.
- Electronic step controller module provides electronic thermostat control.
- Safety door interlock prevents opening of access door while heater is energized.
- Shunt trip disconnect provides power disconnect upon a control sensed malfunction.
- Alarm bell provides an audible alarm to warn of various control failures.
- Time clock to control off-on cycles of the heater as programmed by the owner or electric utility requirements.
- Low water pressure switch.
- High water pressure switch.

Figure 5 Main Power Terminal Block

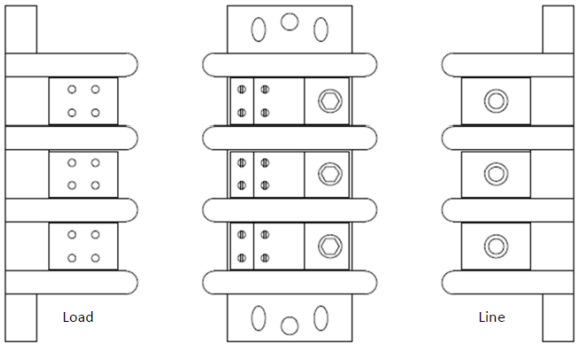

A main power terminal block is provided for field connection of the branch power supply to the electric water heater. All internal power circuits to the immersion heating elements are connected to the load side of the main terminal block. The line side of the terminal block has individual lug type connections properly sized for the recommended copper field wire size.

FUSE AND FUSE BLOCKS:

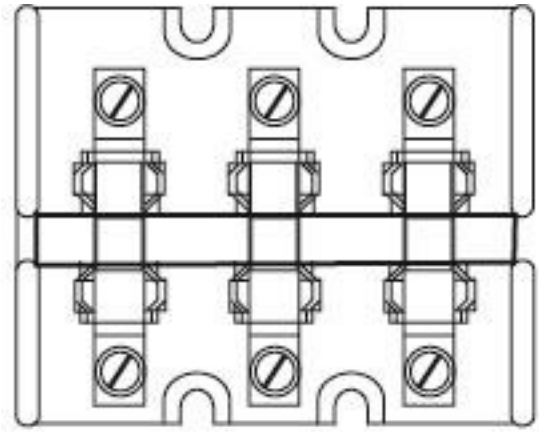

Fig. 6. Fuse Block with Power Circuit fuses

When appliance amperage exceeds 120Amps, each internal power circuit is fused for safety. Each power circuit to an immersion element is fused at a maximum of 48 amps. Power circuits may be fused at lower current levels as needed to balance current on three phase units. The power circuit fuses are held by a spring-loaded fuse block rated for the voltage specified to operate the water heater.

The control circuit is also fused on both the primary and secondary sides of the control circuit transformer.

CONTACTORS:

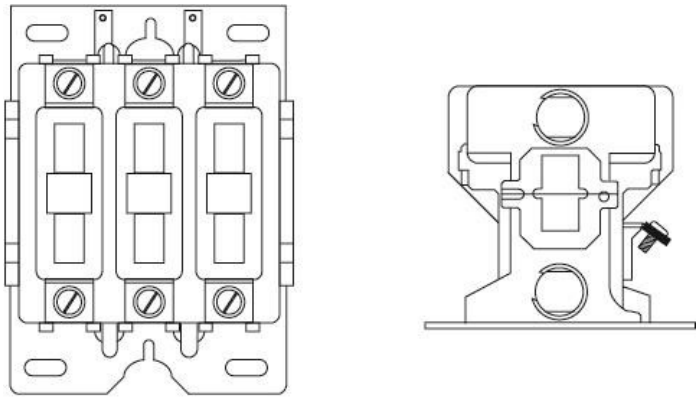

Fig. 7. Magnetic Contactor

The power to the immersion electric heating elements is switched by a definite purpose magnetic contactor. The contactor is supplied with 120 VAC from the control circuit when the immersion thermostat senses a drop in stored water temperature below the desired set point. A magnetic coil in the contactor is energized to complete the electrical circuit supplying power to the immersion heating elements. When the thermostat is satisfied, the contactor coil is de-energized and power to the heating elements is turned off.

CONTROL CIRCUIT TRANSFORMER:

A transformer is used to reduce the line voltage to 120 VAC for internal control operation. The transformer is fused on both the primary and secondary side. The common side of the secondary control circuit is grounded. The VA rating of the control circuit transformer is based on the load of the various components in the water heater control circuit.

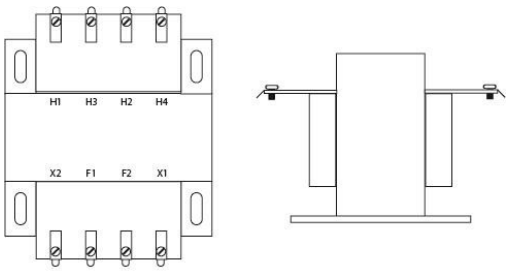

Fig. 8. Control Circuit Transformer

WARNING:

HAZARD OF ELECTRICAL SHOCK - Before opening the electrical access panel to adjust the thermostat or servicing the water heater, make sure the electrical supply to the water heater is turned "OFF". Failure to do this could result in death, serious bodily injury or property damage.

IMMERSION THERMOSTAT (S):

This water heater uses an immersion thermostat(s) to activate magnetic contactors allowing current to flow to the immersion heating elements. The standard control system uses one immersion thermostat for each 54kW of electric heating power in a water heater. As an option, additional immersion thermostats may be provided to add additional steps of thermostatic control. The sensing bulb for each immersion thermostat is immersed in the stored water in the tank to provide quick, accurate response to changes in water temperature. The thermostat sensing bulb is located near the elements it is controlling. The immersion thermostat set point is adjustable by rotating a knob on the control. Turning the knob counterclockwise decreases the temperature set point and turning the knob clockwise increases the set point. The temperature setting shown at the top of the knob is the selected set point. The immersion thermostat has a fixed 6°F (3.3°C) differential.

TEMPERATURE REGULATION:

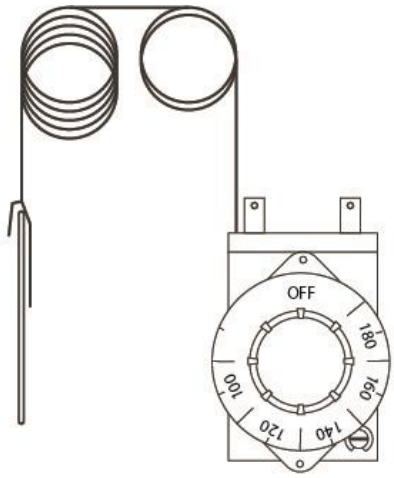

Fig. 9. Immersion Thermostat with Adjustment Knob

WARNING:

HAZARD OF ELECTRICAL SHOCK - Before opening the electrical access panel to adjust the thermostat make sure the electrical supply to the water heater is turned "OFF".

DANGER:

Full power is present whenever the cabinet door is opened, even with the pilot switch(es) turned off.

Set temperature control to the lowest setting which satisfies the hot water requirements of the system. Lower water temperatures help minimize scale formation on the heating elements. See the thermostat information below for electronic step control module.

WATER TEMPERATURE SETTINGS:

This water heater has an adjustable thermostat to control water temperature. The thermostat is factory pre-set at approximately 125° F (51.7° C) or less. Households with small children or invalids may require a 120° F (48.9° C) or lower temperature setting to reduce risk of scald injury. Some states may require a lower temperature setting. Check with your local codes or electric utility for local requirements governing the temperature setting. Remember, no water heating system will provide exact temperatures at all times. Allow a few days of operation at the setting to determine the correct temperature setting consistent with your needs.

CAUTION:

Higher stored water temperature increases the ability of the heater to supply desired quantities of hot water, however remember:

Hotter water increases the risk of scald injury. Setting the temperature selector dial higher provides hotter water, which increases the risk of scald injury.

DANGER!!

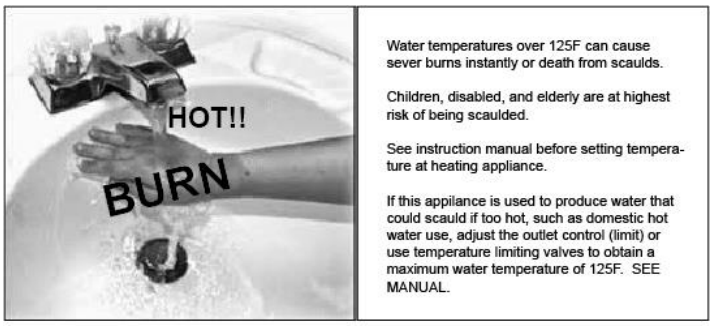

Fig. 10. Temperaure WARNING

WARNING:

WARNING: SHOULD OVERHEATING OCCUR OR THE TEMPERATURE CONTROLS FAIL TO SHUTOFF, TURNOFF OR DISCONNECT THE ELECTRICAL SUPPLY AT THE MAIN POWER DISCONNECT EXTERNAL TO THE APPLIANCE.

DANGER

- **Water temperature over 125° F (51.7°C) can cause severe burns instantly or death from scalding.**
- **Children, disabled and elderly are at highest risk of being scalded.**
- **See the instruction manual before setting the temperature of the heating appliance.**
- **Feel water before bathing or showering.**
- **If this appliance is used to produce water that could scald if too hot, such as domestic hot water use, adjust the outlet control (limit) or use temperature limiting valves to obtain a maximum water temperature of 125° F (51.7° C).**

Always close the electrical control panel door after making a temperature adjustment. Turn on electricity

TEMPERATURE ADJUSTMENT:

1. Tum "OFF" the electrical power to the water heater. If the power disconnect point is out of sight, lock it in the open ("OFF") position and tag to prevent unexpected application of power
2. Open the water heater's electrical access panel
3. Adjust each immersion thermostat to the desired temperature setting by turning the adjusting knob. Each thermostat will be factory pre-set to approximately 125° F (51.7° C) or less as shipped
4. Close the water heater's electrical access panel.
5. Turn "ON" the electrical power to the water heater

CAUTION:

The maximum temperature set-point that should be set for the Immersion Thermostats or programmed into the Electronic Temperature Step Control Module is 180° F (82° C).

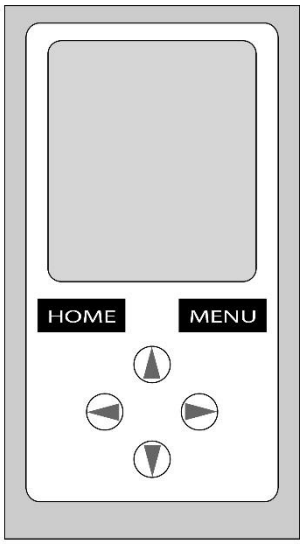

Fig. 10. Electronic Temperature Control with Digital Display

ELECTRONIC TEMPERATURE STEP MODULE:

The water heater uses an optional adjustable electronic temperature control to provide staged ON/OFF control of the electric heating elements. Operation is based on temperature input from an immersion temperature sensor. The sensor is a positive coefficient platinum thermistor. The sensor is placed in a well located above the heating elements it is controlling. A liquid crystal display is provided to indicate sensed temperature and operating parameters. The temperature control may operate in as many as four stages of control. For more stages of operation, multiple electronic temperature control sequencers are installed and wired to operate in series. For any error or diagnostic messages, please see the Electronic Step Controller manual.

SPECIFICATIONS:

Set Point Adjustment Range: Max setting = 180˚ F (82.2˚ C).

Temperature Accuracy: +/- 1° F.

Display Resolution: 1° F via Liquid Crystal Display (LCD).

Sensor: Thermistor 4.8 ohms/˚ F.

Operating Humidity: 5 - 95% RH Noncondensing.

Operating Ambient Temperature: -40° to 140° F.

HIGH WATER TEMPERATURE LIMIT CONTROL:

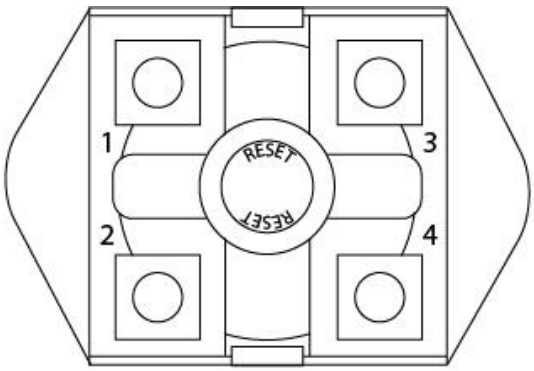

flG. 12. High Water Temperature Limit Control -Fixed Setting

The unit is equipped with a fixed setting manual reset high water temperature limit control. The water heater temperature limit control has a fixed limit setting of 195° F (90.6° C). If water temperature exceeds the limit set point, the limit will break the control circuit and shut down the unit. The limit control can only be reset after the water temperature has cooled below the set point of the limit. The high water temperature limit control is mounted on the surface of the tank, above the heating element installed at the highest point in the tank. The high limit control is reset by pushing the red reset button on the control. Operation of the limit control usually indicates a major problem with the thermostat, contactors or heating elements. Do not continue to push the reset multiple times. The source of the problem must be found and corrected to ensure proper operation. The limit control is covered with an insulation blanket which must be removed to push the red reset button. The blanket of insulation must be replaced before the power is turned on and the water heater is returned to service.

CAUTION:

Disconnect the main power to the heater before opening the element access panel to reset the high limit control.

NOTE:

The high limit control will not re-set until the water temperature has dropped below the set point of the high limit.

IMMERSION HEATING ELEMENT:

WARNING:

HAZARD OF ELECTRICAL SHOCK – Before opening the access panel to remove or service the immersion heating elements, make sure the electrical supply to the water heater is turned "OFF". Failure to do this could result in death, serious bodily injury or property damage.

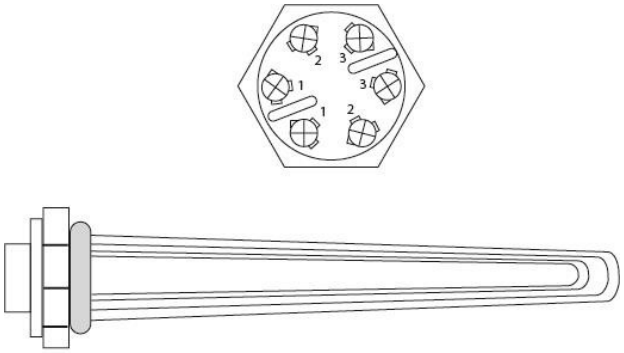

Fig. 13. Immersion Heating Element

The heating input to this commercial electric water heater is provided by low watt density immersion heating elements. The heating elements are constructed from an Incoloy sheath with a tin plate on the exterior surface. Three element blades are mounted on a single hex-head screw-in mounting flange. The element flange mounts into a 1 1/2" NPT threaded connection welded to the storage tank. The hex-head screw- in mounting flange seals to the tank with an "O" ring gasket at the base of the threaded portion of the flange. The tank flange has a matching recess for the "O" ring gasket to ensure a proper watertight seal. The "O" ring element gasket must be replaced with a new gasket when an element is removed for inspection, cleaning or replacement.

SAFETY DOOR INTERLOCK:

The optional safety door interlock is an electrically operated locking pawl that is energized when main power to the water heater is turned "ON." The interlock is mounted to the inside of the electrical control panel door and extends behind a locking flange when energized. Main power may be turned off and the electrical access door may be opened for service.

With the door open, main power may be energized if required to service or troubleshoot the operation of selected components.

DANGER:

HAZARD OF ELECTRICAL SHOCK - Full power is present whenever the cabinet door is opened and main power is turned "ON" even with the pilot switch(es) turned off.

LOW WATER CUTOFF (OPTIONAL)

This water heater may be equipped with an optional electronic low water cut-off installed at the factory. This low water cut-off device uses a water level sensing probe located above the heating element installed in the highest point in the storage tank. If the internal water level drops below this point, the low water cut-off will shut down operation of the heating elements. An electronic type of low water cut-off is available as a factory supplied option on all models. The optional electronic low water cut-off has an LED located on the main circuit board. This LED will be illuminated, and the control circuit will be completed between the common and normally open contacts on the circuit board when the sensing probe is below the water level in the storage tank. An optional manual reset function and test button is available on the electronic low water cut-off. The operation of a low water cut-off should be inspected every six months.

LOW WATER PRESSURE SWITCH:

A low water pressure switch is available as an option on this water heater. A water pressure switch is used to monitor the water pressure in the water heater storage tank. If the water pressure drops below an adjustable set point, the control circuit is opened, and operation of the water heater is shut down. The low water pressure switch may be specified with either an auto-reset function or a manual reset function on low water pressure.

HIGH WATER PRESSURE SWITCH (OPTIONAL):

A high water pressure switch is available as an option on this water heater. A water pressure switch is used to monitor the water pressure in the water heater storage tank. If the water pressure rises above an adjustable set point, the control circuit is opened, and operation of the water heater is shut down. The low water pressure switch may be specified with either an auto-reset function or a manual reset function on high water pressure.

MANUAL LIMITING SWITCHES (OPTIONAL):

As an option, a switch or multiple switches may be provided to interrupt the 120 VAC control circuit feed to the contactor coil or coils from the immersion heating thermostat(s). This switch may be used to manually turn off a portion of the heating element input. This feature may be used to reduce electrical input of the water heater in the summer months when ground water temperatures are warmer and full electrical input from the immersion heating elements is not required. The water heater may be restored to full input by moving the switches to the "ON" position.

TIME CLOCK (OPTIONAL):

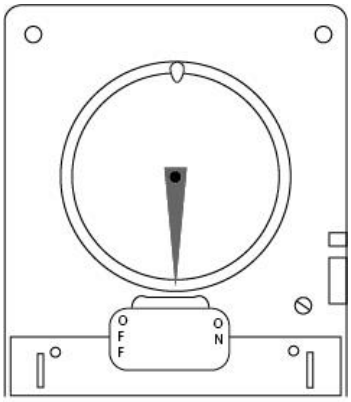

Fig. 18. Time Clock

The water heater may be provided with an optional time clock. The time clock will allow the water heater to be turned on and off with a pre-set schedule. The time clock may be specified with a 24 hour scheduling period or with a 7 day scheduling period. By the adjustment of the set points on the time clock, the water heater may be turned off when hot water is not needed or in periods when the building may not be occupied. The time clock allows the water heater to automatically cycle on in advance of the time when hot water may be needed. This will ensure that hot water is always available yet save energy when there are scheduled periods when there will be no requirement for hot water. This feature is especially useful for schools and buildings that are occupied on a fixed schedule. As an additional feature, time clocks may be furnished with a spring wound carry-over function to ensure that a switching schedule is maintained in periods where there may be power interruptions. The time clock works by making and breaking the 120 VAC control circuit to the contactor coils to shut down operation of the heating elements in the desired time periods.

PILOT LIGHTS (OPTIONAL):

The water heater may be provided with optional pilot lights to provide an external indicator for each contactor or stage of heating elements that is energized. Each pilot light is wired in parallel with the 120 VAC control circuit feed to the contactor coil(s). The pilot will be turned on as the contactor coil(s) is energized by the temperature controls.

SHUNT TRIP DISCONNECT (OPTIONAL):

Shunt trip disconnect provides a power disconnect upon a control sensed malfunction via a circuit breaker installed in the main power supply to the water heater. The circuit breaker is shipped as a separate item that must be field installed. The water heater 120 VAC control circuit provides a feed to the circuit breaker that will shut down main power on either a low water level condition (if equipped) or high water temperature. Once the water heater is installed and all power is connected, the toggle switch that arms the shunt trip must be placed in the on position to provide the shunt trip function on the desired control sensed malfunction.

ALARM BELL (OPTIONAL):

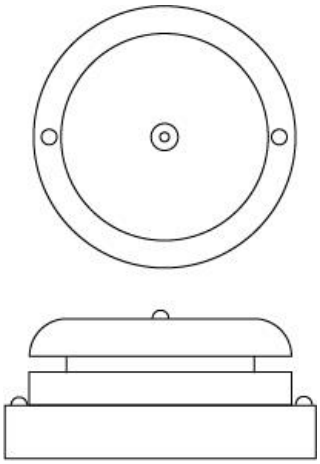

Fig. 19. Alarm Bell

An alarm bell with a silencing switch is available as an option on this water heater. The alarm bell can be used to provide an audible indication of a control sensed malfunction. The user must specify the safety function or multiple safety functions that the alarm bell will sound when the water heater is ordered from the factory. The alarm bell typically is used to indicate a low water condition or a high water temperature condition. The alarm is furnished with a silencing switch to turn off the audible alarm while trouble shooting a control sensed malfunction that is indicated by an audible alarm. Once the control sensed malfunction is corrected, the silencing switch must be returned to the "ON" position to re- establish the audible alarm function.

START-UP PROCEDURES:

Never operate the heating elements without being certain the water heater is filled with water and a temperature and pressure relief valve is installed in the relief valve opening on top of the heater.

The pilot switch(es) (if equipped) mounted on the control cabinet permit the heater to be turned on and off without having to operate the electrical disconnect switch. The pilot switch interrupts only the 120 VAC control circuit in the water heater. Full power is still present at the terminal block, fuses and contactors.

DANGER:

Full power is present whenever the cabinet door is opened, even with the pilot switch(es) turned off.

THERMAL EXPANSION OF WATER:

A relief valve that discharges periodically may be due to thermal expansion in a closed system. Many water systems are equipped with pressure reducing valves, check valves or back flow preventers which may cause the water system to be closed. As water is heated it will expand in volume due to thermal expansion. The system must make allowance for this expansion. If an expansion tank is not provided in the system, water pressure may increase to the point where the water heater's temperature and pressure relief valve opens to relieve the excess pressure. The temperature and pressure relief valve is not intended for the constant relief of thermal expansion. This is an unacceptable condition and must be corrected. **Do not plug or cap the relief valve discharge!** A properly sized expansion tank is typically installed in the potable water system to relieve the pressure built up by thermal expansion of heated water. Consult your local plumbing contractor and plumbing wholesaler for assistance in properly selecting an expansion tank for your system.

As the water heater operates, there may be noises generated by the expansion and contraction of the metal parts of the water heater and related piping. These noises may occur during periods of heat up or cool down. They do not represent harmful or dangerous conditions.

FILLING THE WATER HEATER:

1. Ensure that the electrical power to the water heater is in the "OFF" position. If the power disconnect point is out of sight, lock it in the open ("OFF") position and tag to prevent unexpected application of power.
2. Close the water heater drain valve(s).

3. Open a nearby hot water faucet to allow the air in the system to escape as the tank fills.
4. Fully open the cold water inlet valve to the water heater to begin filling the heater and piping.

NOTE: The cold water supply must be left in the open position when the water heater is in use.

5. Check the nearby hot water faucet to verify that air is exiting the tank as it fills with water. Allow water to run until a constant flow is obtained at the faucet. This will ensure that all air is purged from the system.
6. While the tank is filling, open the electrical control panel and set the thermostat(s) to the desired temperature. If equipped with multiple thermostats, all individual thermostats may be adjusted to the same temperature set point or they may be set a 2° F to 4° F (1° C to 2° C) apart to step the elements ON in stages.
7. Ensure that any pilot switches or manual limiting switches are placed in the "ON" position.
8. When a constant flow is obtained at the faucet, it may be turned off. The temperature and pressure relief valve should be manually opened to ensure there is no captive air in the storage tank. A constant stream of water must flow from the manually opened relief valve. Release the opened relief valve and allow it to close after water is observed.
9. Carefully check the tank, pipe and fittings for any sign of a water leak. Immediately repair as needed. Open the access door to the immersion heating elements and check for leaks at the element mounting flanges. If any leak is detected, tighten the screw-in element.

START-UP

10. Ensure that the electrical access panel is closed and the heating element access panel is in place before proceeding.
11. After assuring that the tank is completely filled with water and no leaks are detected, you are now ready to start operation of the water heater.
12. Turn "ON" the electric power at the main disconnect point. The contactors should be energized as the elements begin to heat the water. Some contactors may make a buzzing noise, this is normal.
13. If contactors are chattering, turn "OFF" the main power, open the control panel and clean the contact points of the magnetic contactor(s). Remove any dust, dirt or foreign matter that may have found its way into the contactor or other electrical components in the control panel during shipping, installation or service.
14. Close the electrical control panel and turn "ON" the main power
15. The water heater is now ready for normal operation.

INITIAL START-UP CHECKS

The following checks should be made by the installer when the water heater is placed into operation for the first time.

WARNING

HAZARD OF ELECTRICAL SHOCK – Before opening the access panel to perform service on any electrical component, make sure the electrical supply to the water heater is turned "OFF". Failure to do this could result in death, serious bodily injury or property damage.

1. Allow the water heater to heat for approximately thirty minutes after following the filling and start-up procedures.
2. **Turn 'OFF' the main electrical power to the water heater**. If the power disconnect point is out of sight, lock it in the open "OFF" position and tag to prevent unexpected application of power.
3. Open the electrical control panel door and feel each wire connection and fuse clip for excessive temperature. If any connection is found to be excessively hot, check the tightness of the connection. Check all factory internal wiring connections and the field made main power connections for tightness.
4. Close and lock the electrical control panel
5. Turn "ON" the main electrical power to the water heater
6. Temperature control and contactor operation should be checked by allowing the water heater to come up to temperature and shut off automatically.
7. The water heater is now ready for continuous normal operation.

SHUTDOWN PROCEDURE

Draining the Water Heater

1. Turn "OFF" the main electrical power the water heater. If the power disconnect point is out of sight, lock it in the open "OFF" position and tag to prevent unexpected application of power.
2. Turn the valve in the water heater's cold water supply to the "Closed" position.
3. Turn the valve in the water heater's outlet to the closed or "OFF" position.
4. Manually open the temperature and pressure relief valve to remove any pressure from the storage tank.

CAUTION:

Any water discharged from the manually opened relief valve may be hot and cause scalding or injury.

5. Allow the system to cool and then open the drain valve to empty the storage tank. It will be necessary to manually hold the temperature and pressure relief valve in the open position to break the vacuum in the tank and allow it to vent and drain. Ensure that the water heater drain is routed to a properly sized floor drain to allow water to be removed from the tank. If a floor drain is not available, a hose may be attached to the water heater's drain to take the water outdoors.
6. The water heater is now shut down and ready for service or maintenance.
7. Follow the filling and start-up procedure to place the water heater back into service.

MAINTENANCE

Listed below are the items that must be checked to ensure safe reliable operations. Verify proper operation after servicing.

WARNING

HAZARD OF ELECTRICAL SHOCK – Before opening the access panel to preform service on any electrical component, make sure the electrical supply to the water heater is turned "OFF". Failure to do this could result in death, serious bodily injury or property damage.

CAUTION

Label all wires prior to disconnection when servicing controls. Wiring errors can cause improper and dangerous operation.

TEMPERATURE AND PRESSURE RELIEF VALVE OPERATION

The temperature and relief valve(s) should be manually operated at least once a year. A relief valve that fails to completely reseat after manual operation and continues to discharge water must be immediately replaced with a new, properly sized, temperature and pressure relief valve.

The relief valve(s) should be installed in the vertical position and mounted in the tapping provided in the storage tank. No valve should be placed between the relief valve and the water heater. To prevent water damage, the discharge from the relief valve must be piped to a suitable floor drain for disposal when relief occurs. No reducing couplings or other restrictions shall be installed in the discharge line. The discharge line shall allow complete drainage of the valve and line. The discharge line from the relief valve should be a metallic pipe or a high temperature plastic pipe (CPVC, etc.) to ensure that hot water flow will not damage the discharge piping from the relief valve.

CAUTION:

Avoid contact with hot discharge water. Ensure that no one is in front of or around the relief valve discharge line. Make sure that the extremely hot water manually discharged from the relief valve will not cause bodily injury or property damage.

WATER CHEMISTRY

In hard water areas, water treatment should be used to reduce the introduction of minerals to the system. Minerals in the water can collect in the storage tank and on the immersion heating elements causing noise in operation. Excessive build-up of minerals on the surface of the heating elements can lead to a non-warrantable failure.

Proper operation of this electric water heater is based on heating potable water with a hardness of 5 to 25 grains per gallon and total dissolved solids not exceeding 350 PPM. Consult the manufacturer when heating potable water exceeding these specifications. Heating of high hardness and/ or high total dissolved solids water may require frequent cleaning of the storage tank and heating elements to achieve proper operation. The higher the level of dissolved solids or water hardness, the faster the dissolved minerals in the water will precipitate out and form scale deposits on the heating elements and in the storage tank. The level of scale

formation is also accelerated as stored water temperature increases. Water with a hardness of less than 5 grains per gallon will usually have a low pH level can be aggressive and corrosive causing non-warrantable damage to the storage tank, heating elements and associated piping. Corrosion due to water chemistry generally shows up first in the hot water system because heated water increases the rate of corrosive chemical reactions.

Water heater maintenance includes periodic tank flushing, cleaning and removal of lime scale from the heating elements.

FLUSHING THE STORAGE TANK

1. Turn "OFF" the main power at the electrical disconnect switch
2. Open the drain valve. Allow water to flow until it runs clean.
3. Close the drain valve when finished flushing.
4. Turn "ON" the electrical disconnect switch (After filling)

SEDIMENT REMOVAL

Water born impurities consist of dissolved minerals which precipitate out of the heated water and fine particles of soil and sand which settle out and form a layer of sediment on the bottom of the storage tank. In time, if not removed, the level of sediment might reach the heating elements.

For convenience, sediment removal and element line scale removal should be performed at the same time as follows:

Sediment and Lime Scale Removal

Sediment and lime scale accumulation on the heating elements is a normal condition common to all immersion type elements. Factors which affect the amount of this formation are:

1. Amount of hot water used. As the volume of water increases, more scale results.
2. Water temperature. As the temperature of the water is increased, more scale is deposited on the elements.
3. Characteristics of water supply. Regardless of water treatment, the elements should be examined regularly.

Scale accumulation in the bottom of the storage tank may be removed by turning OFF the main power and draining the tank. Once all water is removed, the 3" access plug located above the drain valve, can be removed. This will allow large accumulations of scale to be cleaned from the bottom of the tank.

NOTE

If opening manways or hand holes (optional) all gaskets must be replaced with new gaskets. DO NOT RE-USE Gaskets.

Water scale accumulations on the immersion heating elements reduce the ability of the elements to heat water and may cause noise to occur during operation. It is recommended that a heating element be removed

at least once a year for examination. If it is scaled, all of the elements should be removed and cleaned. The element gasket must be replaced with a new gasket when the element is removed to be cleaned or inspected.

Small accumulations of lime scale may be removed with a stiff bristle brush. Severe accumulations of lime scale should be removed by dissolving the accumulation on a commercial delimer. Do not use muratic acid or hydrochloric acid based deliming solutions to remove lime scale from the elements. **Do not pour delimer into the storage tank. Deliming solutions may damage the glass lined interior of the tank or the passivation layer of the stainless steel tank.**

DANGER

Keep all delimers away from anode rods (Glass Lined Tanks Only) to prevent the formation of flammable and explosive gas.

1. Drain the water heater following the "SHUTDOWN PROCEDURE" instructions
2. On some high kW input models, it is necessary to remove a side panel to gain access to the exposed ends of the elements which are not accessible through the front element access door.
3. Disconnect the wires attached to the element terminals. Try not to disturb the wiring unnecessarily and reconnection will be easier.
4. Loosen the screw-in element flange with a socket and breaker bar. Do not use an impact gun (air or electric) to remove the element flanges from the tank.
5. Remove the elements from the opening with a twisting, pulling action if the elements are scaled beyond the size of the tank flange openings. Brush loose scale from the elements.
6. Place scaled ends of heating elements into a delimer solution and allow scale to dissolve. Do not permit delimer or water to contact heating element electrical terminals.
7. Flush clean ends of elements with water when deliming or cleaning is completed.
8. Clean remaining gasket recess on each screw-in element flange. Do not reuse element gaskets.
9. Install a new gasket on each element. Install element into the tank opening where it was removed. Tighten the flange with the socket and breaker bar used to remove the element.
10. Attach wires to element terminals from which they were removed.
11. Follow "FILLING THE WATER HEATER" instructions to restore hot water service. Check for water leaks around the elements and proper operation when the heater is filled.

TROUBLE SHOOTING

Checklist:

Before calling for service, check the following points to see if the cause of trouble can be identified and corrected. Reviewing this checklist may eliminate the need for a service call and quickly restore hot water service.

Not Enough or no hot water

1. Ensure that the electrical disconnect switch servicing the water heater is in the "ON" position. The pilot switch(es) on the cabinet should also be in the "ON" position. In some areas, water heater electrical service may be limited by the power company. If the heater operates on a controlled circuit, heater recovery may be affected.
2. Check the fuses. Disconnect electrical supply at the main disconnect. The electrical disconnect switch usually contains fuses. The water heater has fuses located behind the cabinet front door. When replacing internal fuses in the water heater control panel, ensure that the same type and size of fused is used.
3. If the water was excessively hot and is now cold, the manual reset high limit may have operated.

   To reset, turn 'OFF' electricity to the appliance at the main disconnect, remove element box cover panel then push the reset button. Replace cover. The high limit is located above the upper most heating element in the storage tank. On some high input models additional high limits may be located behind the side access panel. Repeat operation of the high temperature cut-off should be investigated by your mechanical contactor or by a qualified technician. A contactor or thermostat may be malfunctioning.

DANGER

POWER IS STILL PRESENT WHENEVER CABINET DOOR IS OPEN, EVEN WITH PILOT SWITCH TURNED OFF.

CHECKING ELECTRICAL COMPONENTS SHOULD BE DONE BY A QUALIFIED ELECTRICIAN

4. The capacity of the heater may have been exceeded by a large demand for hot water. Large demands required a recovery period to restore water temperature.
5. Cold incoming water temperature will lengthen the time required to heat the water to the desired temperature. If the heater was installed in the summer when incoming water temperature was warm, colder ground water in the winter months can create the effect of less hot water.
6. Look for wasted hot water from leaking or open hot water faucets.
7. Sediment or lime scale may be affecting water heater operation. Refer to "Maintenance" for details.

Water is too hot

Refer to "Temperature Regulation" and reset the thermostat set point to a lower temperature that will meet requirements for hot water.

Water heater makes sounds

1. Sediment or lime scale accumulation on the elements causes sizzling and hissing noises, when the heater is operating. If this occurs, the tank bottom and elements should be cleaned. Refer to "Maintenance" for details.
2. Some of the electrical components of the water heater make sounds which are normal. Contactors will "click" or snap as the heater starts and stops. Transformers and contactors often hum.

Water leakage is suspected

1. Check to see if the drain valve is tightly closed
2. The apparent leakage may be condensation which forms on cool surfaces of the heater and piping.
3. If the outlet of the relief valve is leaking, it may represent:
    a. Excessive water pressure
    b. Excessive water temperature.
    c. Faulty relief valve.

    Excessive water pressure is not the most common cause of relief valve leakage. It is often caused by a "closed system". A check valve, back-flow preventer or pressure reducing valve, in the inlet system will not permit the expanded hot water volume to equalize pressure with the main. A relief valve must release the water or the water heater and plumbing system will be damaged.

    When such a condition is encountered, local codes or inspection agencies should be consulted to determine which of the following procedures is acceptable in your area.

    - Installation of an expansion tank.
    - Removal of the check valve.
    - Disconnect power using the main disconnect – (Not the switch on the front cabinet)
4. Examine the flange of the elements for gasket leakage. Remove the element box cover panel and tighten the screw-in flange or if necessary, follow the "Water and Lime Scale Removal" procedure to remove the element and replace the "O" ring gaskets that seal each element.

IF YOU CANNOT IDENTIFY OR CORRECT THE SOURCE OF THE MALFUNCTION:

1. Place the water heater electrical disconnect switch in the "OFF" position
2. Contact your mechanical contractor or service technician.

PREFERRED PIPING SCHEMATIC

WARNING

This drawing shows suggested piping configuration and valving
Check with local codes and ordinances for additional requirements.

BRADFORD WHITE
WATER HEATERS

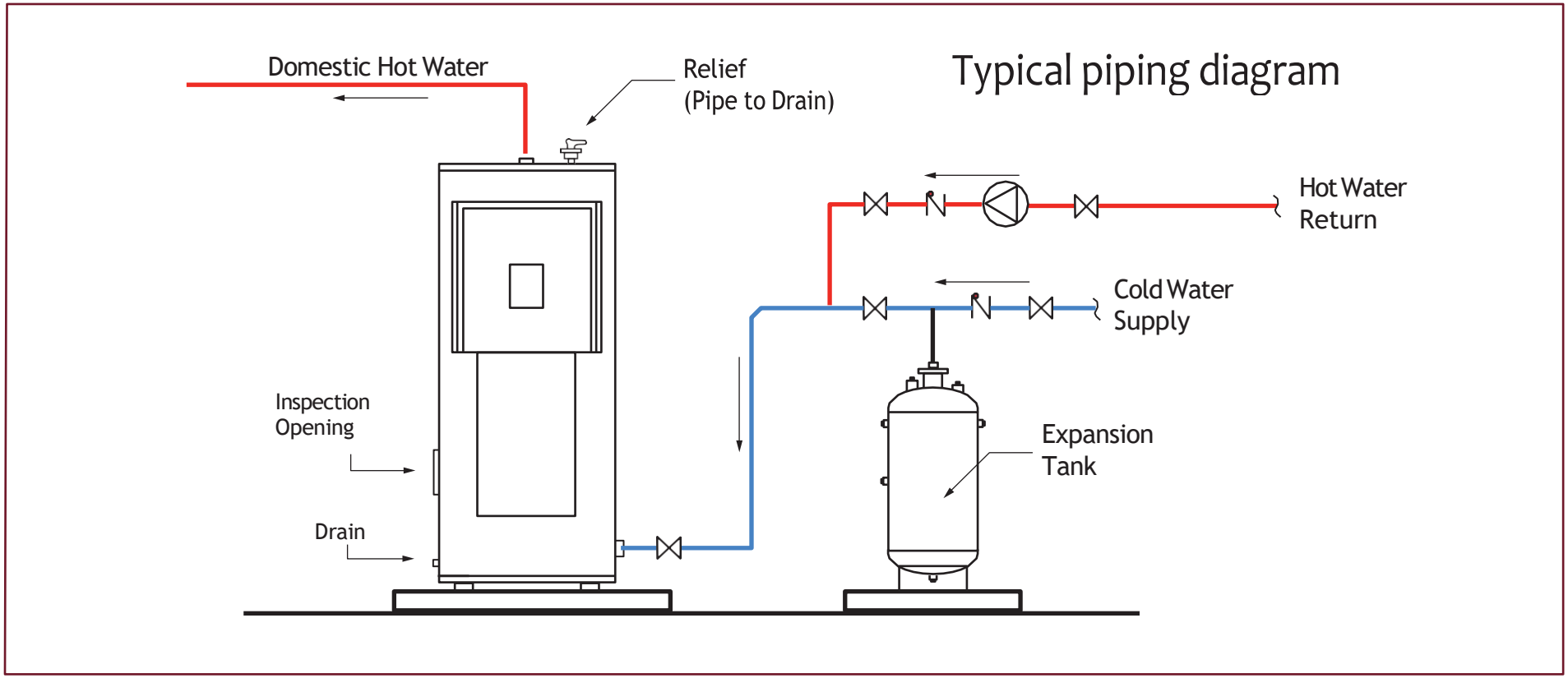

Bradford White Water Heaters is not responsible for improper tank or piping installation.
These instructions are meant to be only a guide line. Please consult
with your boiler manufacturer for specific requirements.

When required, secure tanks with proper anchors or tie-down straps.
Check with local building codes for any seismic codes and guidelines

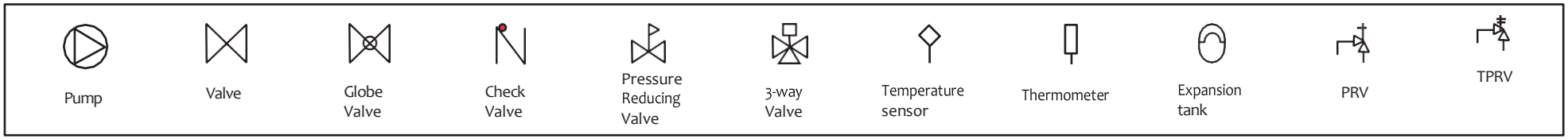

WIRING DIAGRAMS

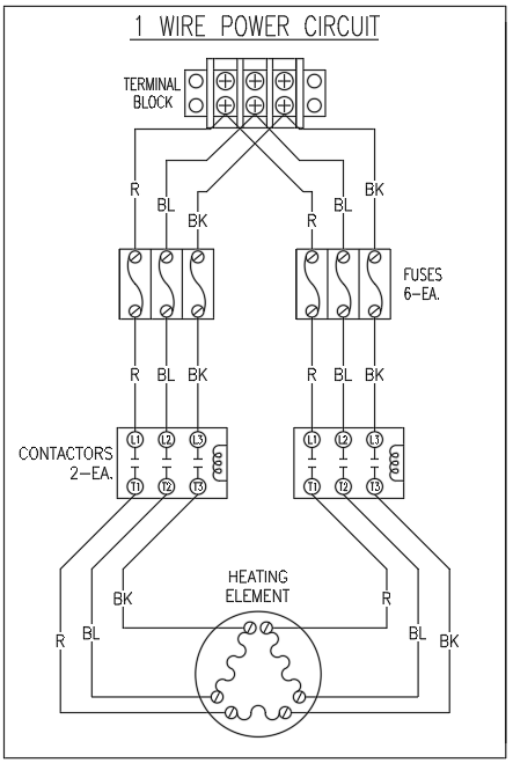

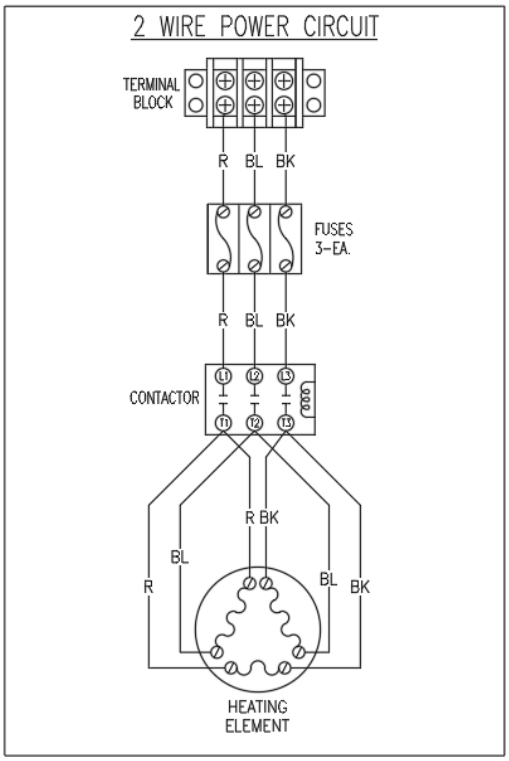

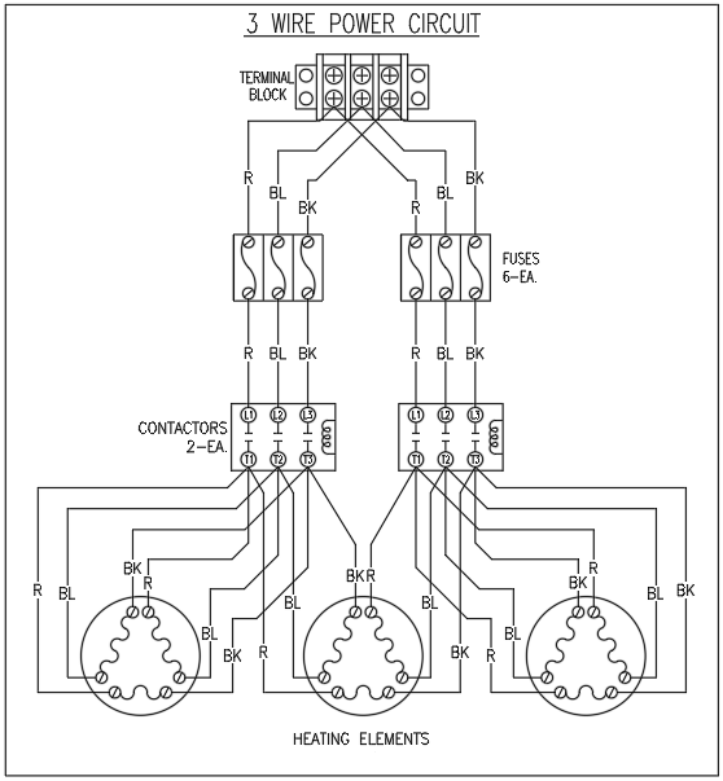

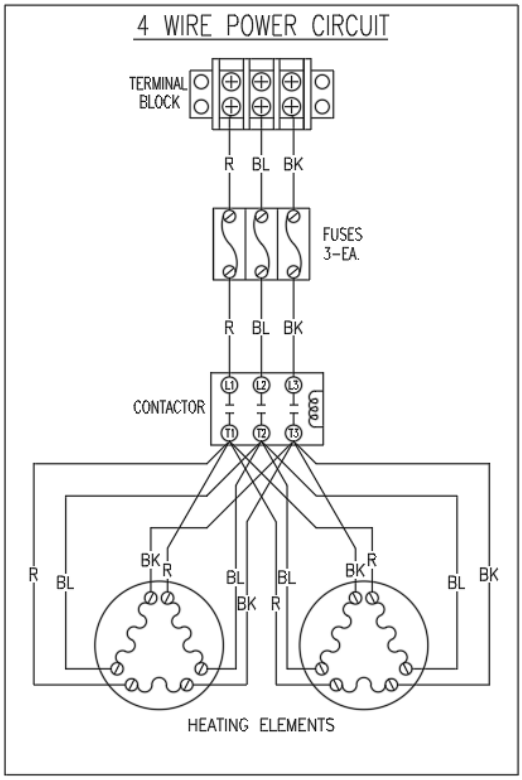

WIRING DIAGRAMS

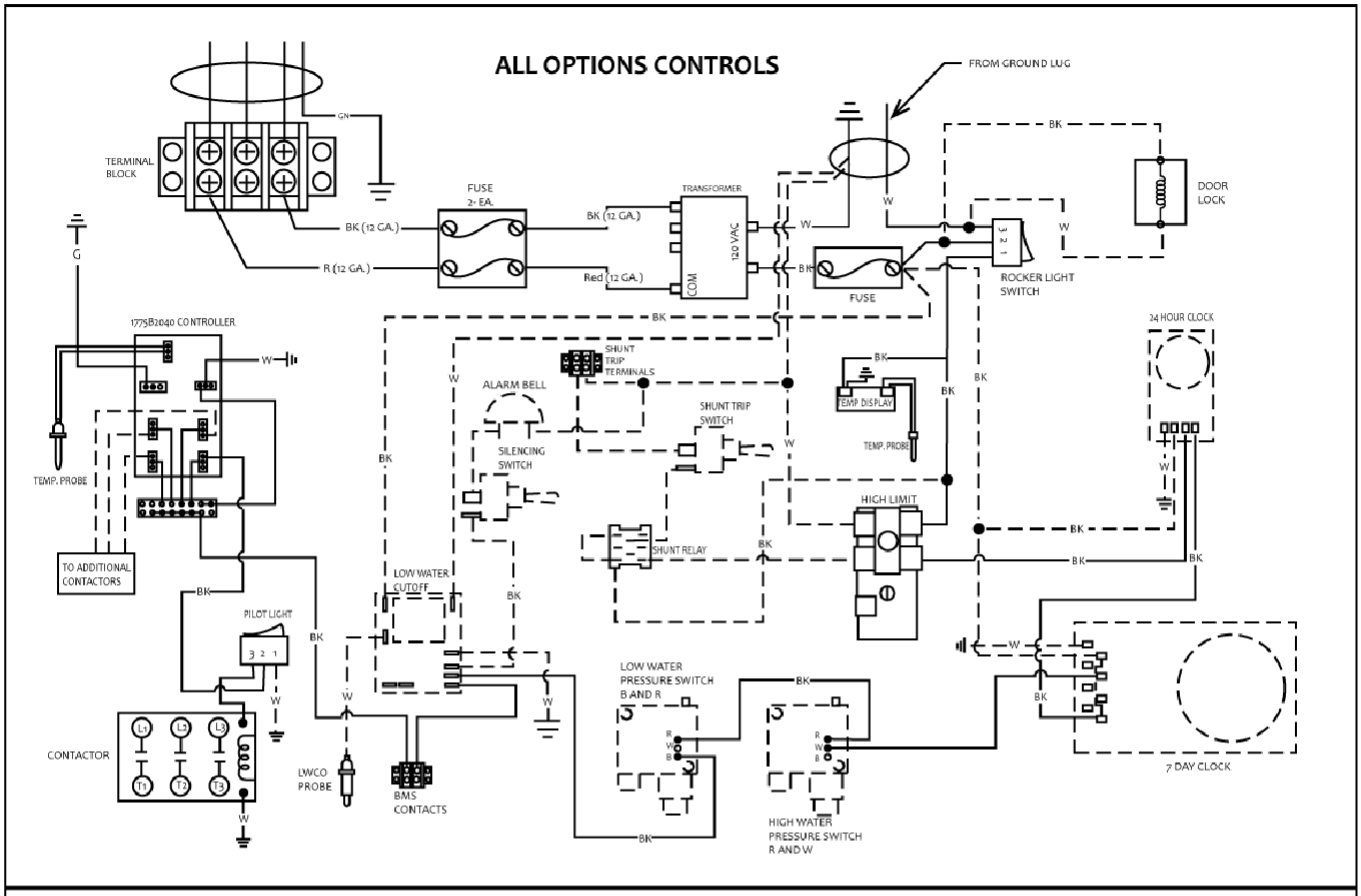

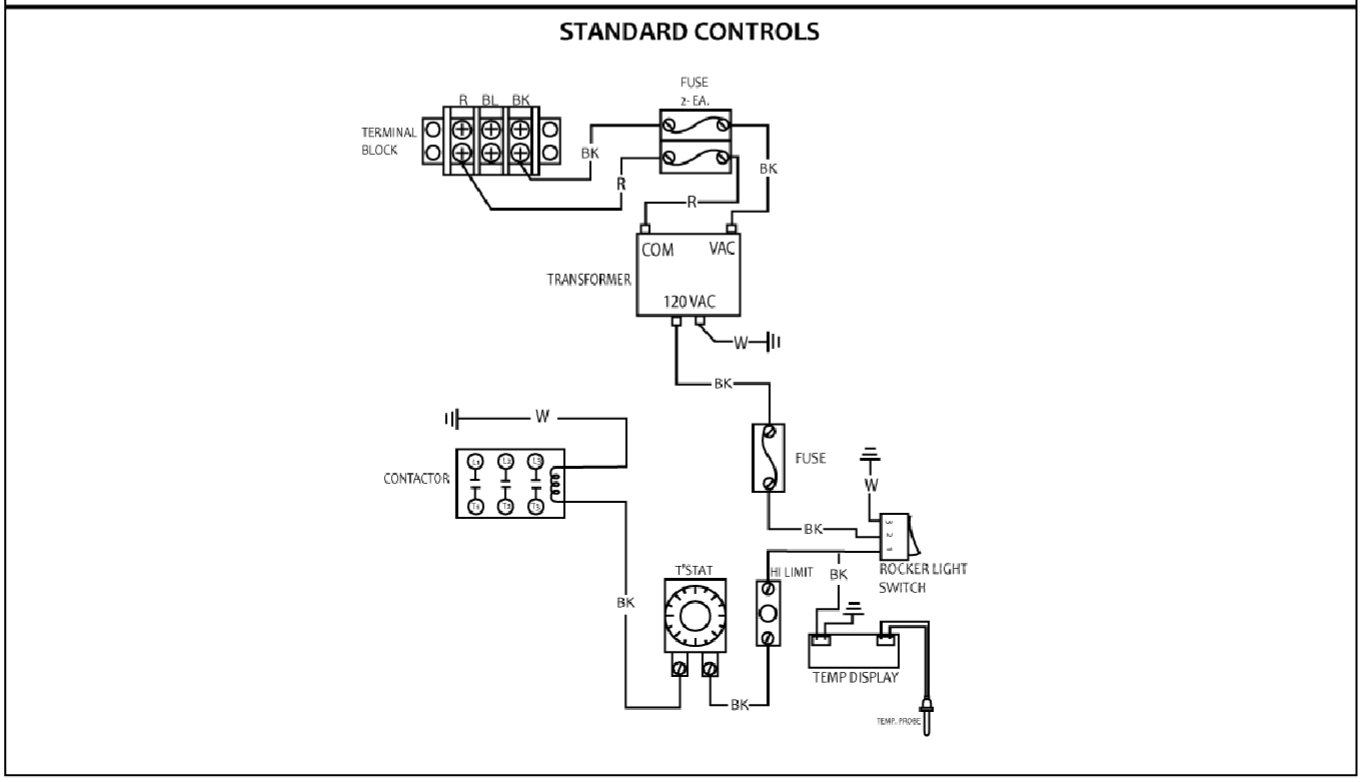

Tank Assembly Drawing

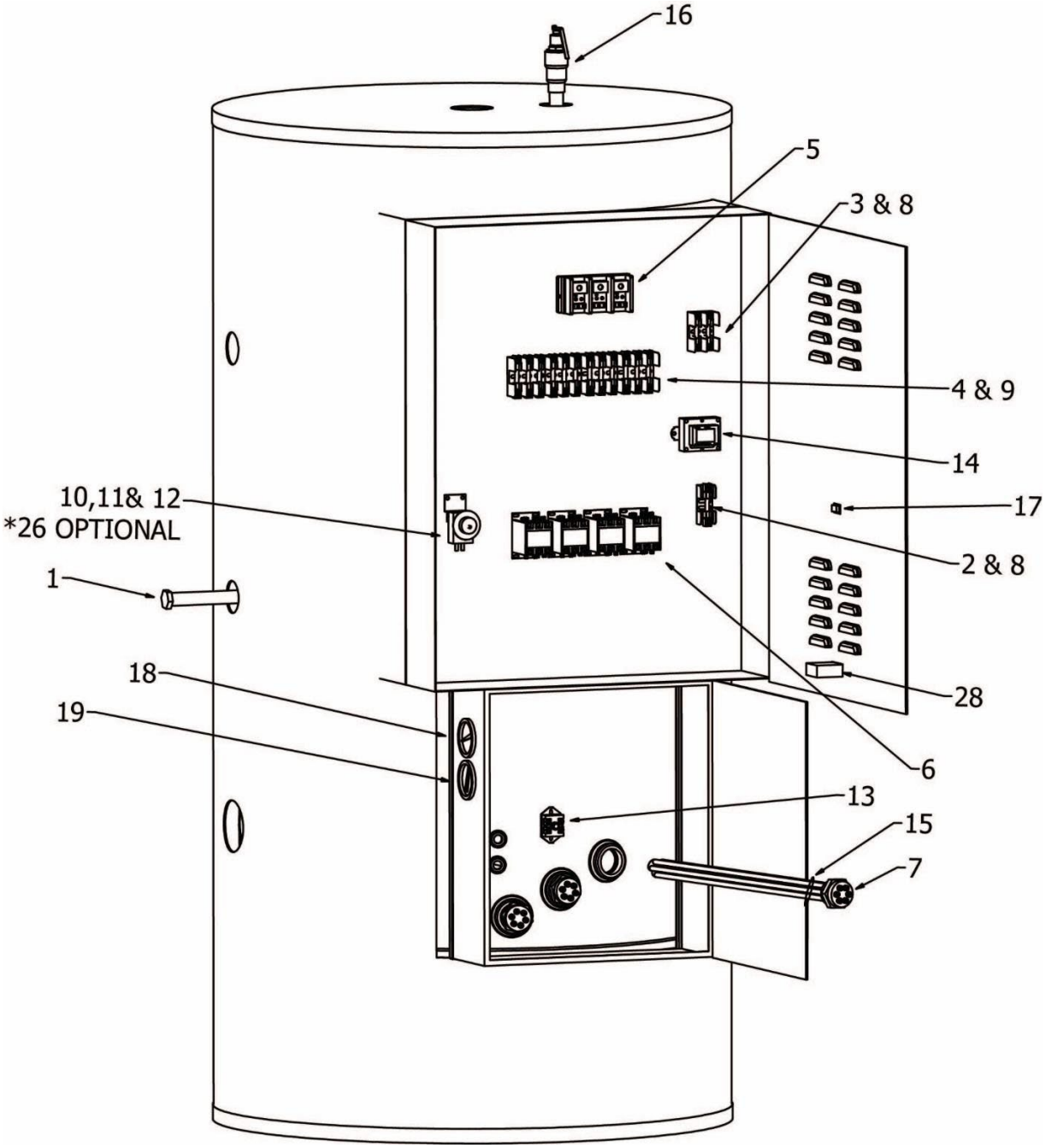

Parts List

ID #	Description	Part Number
	ANODES	
1	Anode 1"" x 28"" long	624 100303 005
1	Anode 1"" x 34"" long	624 100303 006
1	Anode 1"" x 40"" long	624 100303 007
	FUSE BLOCKS	
2	Fuse Block **250V** 30 amp 1 fuse	673 102143 003
3	Fuse Block **250V** 30 amp 2 fuses	673 102143 004
3	Fuse Block **600V** 30 amp 2 fuses	673 102143 002
4	Fuse Block **300V** 60 amp 3 fuses	673 102143 001
4	Fuse Block **600V** 60 amp 3 fuses	673 102143 005
4	Fuse Block **600V** 30 amp 3 fuses	673 102143 006
4	Fuse Block **300V** 60 amp 3 fuses	673 102143 007
	TERMINAL BLOCK	
5	Terminal Block **600V** 175 amps	673 102137 001
5	Terminal Block **600V** 420 amps	673 102137 002
	CONTACTOR	
6	Contactor	673 102142 001
	ELEMENTS	
7	Element 208V 12kW	643 102101 012
7	Element 208V 15kW	643 102101 011
7	Element 208V 18kW	643 102101 003
7	Element 240V 12kW	643 102101 021
7	Element 240V 15kW	643 102101 013
7	Element 240V 18kW	643 102101 010
7	Element 380V 12kW	643 102101 024
7	Element 380V 15kW	643 102101 006
7	Element 380V 18kW	643 102101 007
7	Element 400V 12kW	643 102101 023
7	Element 400V 15kW	643 102101 008
7	Element 400V 18kW	643 102101 009
7	Element 415V 12kW	643 102101 022
7	Element 415V 15kW	643 102101 004
7	Element 415V 18kW	643 102101 005
7	Element 480V 12kW	643 102101 020
7	Element 480V 15kW	643 102101 002

7	Element 480V 18kW	643 102101 001
7	Element 600V 12kW	643 102101 019
7	Element 600V 15kW	643 102101 018
7	Element 600V 18kW	643 102101 017
ID #	**Description**	**Part Number**
	FUSES	
8	Fuse 250V 15 amp non	673 102144 011
	FUSES	
9	Fuse JJN-15	673 102144 002
9	Fuse JJN-30	673 102144 012
9	Fuse JJN-40	673 102144 001
9	Fuse JJN-50	673 102144 009
9	Fuse JJS-15	673 102144 003
9	Fuse JJS-30	673 102144 008
9	Fuse JJS-40	673 102144 005
9	Fuse JJS-50	673 102144 006
	THERMOSTATS	
10	Thermostat Immersion	673 102149 001
11	Thermostat Dial	673 102254 000
12	Thermostat Mount	673 102250 000
13	high limit	673 102148 001
14	Transformer 208/240/480V - 120V 60VA	673 102333 001
14	Transformer 380/400/415V - 120V 75VA	673 102222 000
14	Transformer 240/480V - 120V 250VA	673 102386 000
	MISCELLANEOUS	
15	Element Gasket	605 102313 000
16	Relief Valve 150psi ¾” npt	630 102170 000
17	Pilot light switch	673 102147 001
18	Temperature Gauge	630 102324 001
19	Pressure Gauge	630 102325 002
20*	LWCO relay	673 102457 001
21*		
22*	LWCO probe holder	673 102457 002
23*	Low/High Pressure Switch	678 102380 000
24*	Safety Door Interlock	678 102377 000
25*	Alarm Bell	678 102381 000
26*	Step Controller	673 102343 001
27*	Bulb Well for Step Controller	673 102344 001
28	Digital Temperature Display	673 102477 001
*	**Not On Drawing**	

NOTES